GIS REGISTRY INFORMATION

SITE NAME:	SC Johnson Waxdale Boiler House		
BRRTS #:	03-52-534485	**FID #** (if appropriate):	
COMMERCE #:	53177-1966-11-B		
CLOSURE DATE:	March 28, 2008		
STREET ADDRESS:	8311 16th Street		
CITY:	Sturtevant		

SOURCE PROPERTY GPS COORDINATES (meters in WTM91 projection):	**X =**	693582	**Y =**	250074

CONTAMINATED MEDIA:	Groundwater		Soil	X	Both	
OFF-SOURCE GW CONTAMINATION >ES:			Yes		No	X

• **IF YES, STREET ADDRESS:**				
• **GPS COORDINATES** (meters in WTM91 projection):	**X =**		**Y =**	
OFF-SOURCE SOIL CONTAMINATION >Generic or Site-Specific RCL (SSRCL):	**Yes**		**No**	X
• **IF YES, STREET ADDRESS 1:**				
• **GPS COORDINATES** (meters in WTM91 projection):	**X =**		**Y =**	
CONTAMINATION IN RIGHT OF WAY:	**Yes**		**No**	X

DOCUMENTS NEEDED

Closure Letter, and any conditional closure letter issued or denial letter issued	X
Copy of any maintenance plan referenced in the final closure letter	NA
Copy of (soil or land use) deed notice *if any required as a condition of closure*	NA
Copy of most recent deed, including legal description, for all affected properties	X
Certified survey map or relevant portion of the recorded plat map (*if referenced in the legal description*) for all affected properties	NA
County Parcel ID number, *if used for county*, for all affected properties – 22-033-000	X
Location Map that outlines all properties within contaminated site boundaries on USGS topographic map or plat map in sufficient detail to permit the parcels to be located easily. If groundwater standards are exceeded, the map must also include the location of all municipal and potable wells within 1200' of the site.	X
Detailed Site Map(s) for all affected properties, showing buildings, roads, property boundaries, contaminant sources, utility lines, monitoring wells and potable wells. This map shall also show the location of all contaminated public streets, highway and railroad rights-of-way in relation to the source property and in relation to the boundaries of groundwater contamination exceeding ch. NR 140 ESs and soil contamination exceeding ch. NR 720 generic or SSRCLs.	X
Tables of Latest Groundwater Analytical Results (no shading or cross-hatching)	NA
Tables of Latest Soil Analytical Results (no shading or cross-hatching)	X
Isoconcentration map(s), *if required for site investigation (SI).* The isoconcentration map should have flow direction and extent of groundwater contamination defined. **If not available, include the latest extent of contaminant plume map.**	NA
GW: Table of water level elevations, with sampling dates, and free product noted if present	NA
GW: Latest groundwater flow direction/monitoring well location map (should be 2 maps if maximum variation in flow direction is greater than 20 degrees)	NA
SOIL: Latest horizontal extent of contamination exceeding generic or SSRCLs, with one contour	X
Geologic cross-sections, *if required for SI*	X
RP certified statement that legal descriptions are complete and accurate	X
Copies of off-source notification letters (if applicable)	NA
Letter informing ROW owner of residual contamination (if applicable) (public, highway or railroad ROW)	NA

commerce.wi.gov
Wisconsin
Department of Commerce

ENVIRONMENTAL & REGULATORY SERVICES DIVISION
BUREAU OF PECFA
2129 Jackson Street
Oshkosh, Wisconsin 54901-1805
TDD #: (608) 264-8777
Fax #: (920) 424-0217
Jim Doyle, Governor
Jack L. Fischer, A.I.A., Secretary

March 28, 2008

Mr. Christopher Loney
SC Johnson & Son, Inc.
1525 Howe Street
Racine, WI 53403

RE: **Final Closure**

Commerce # 53177-1966-11-B DNR BRRTS # 03-52-534485
SC Johnson Waxdale Boiler House, 8311 16th Street, Sturtevant

Dear Mr. Loney:

The Wisconsin Department of Commerce (Commerce) has reviewed the request for case closure prepared by your consultant, Drake Environmental, Inc., for the site referenced above. Commerce has determined that this site does not pose a significant threat to the environment and human health. No further investigation or remedial action is necessary.

This case is now listed as "closed" on the Commerce database and will be included on the Department of Natural Resources (DNR) Geographic Information System (GIS) Registry of Closed Remediation Sites to address residual soil contamination. Timely filing of your final PECFA claim (if applicable) is encouraged. If your PECFA claim is not received within 120 days of the date of this letter, interest costs incurred after 60 days of the date of this letter will not be eligible for PECFA reimbursement.

It is in your best interest to keep all documentation related to the environmental activities at your site. If residual contamination is encountered in the future, it must be managed in accordance with all applicable state and federal regulations. If it is determined that any remaining contamination poses a threat, the case may be reopened and further investigation or remediation may be required.

Thank you for your efforts to protect Wisconsin's environment. If you have any questions, please contact me in writing at the letterhead address or by telephone at (920) 303-5410.

Sincerely,

Beth A. Erdman

Beth A. Erdman
Senior Hydrogeologist
Site Review Section

cc: Jason Herbst-Drake Environmental, Inc.

WARRANTY DEED VOL 552 PAGE 375

THIS INDENTURE, Made this 16th day of October, A. D. 1953, between WARREN M. HANSCHE and LEONA D. HANSCHE, his wife; RAYMOND V. HANSCHE and MARGARET M. HANSCHE, his wife; MELVIN R. HANSCHE and M. EVELYN HANSCHE, his wife, of Racine County, Wisconsin, parties of the first part, and S. C. JOHNSON & SON, INC., of Racine, Wisconsin, party of the second part.

WITNESSETH, That the said parties of the first part, for and in consideration of the sum of One Dollar ($1.00) and other good and valuable consideration, to them in hand paid by the said party of the second part, the receipt whereof is hereby confessed and acknowledged, have given, granted, bargained, sold, remised, released, aliened, conveyed and confirmed and by these presents do give, grant, bargain, sell, remise, release, alien, convey and confirm unto the said party of the second part, its successors and assigns forever, the following described real estate, situated in the Town of Mt. Pleasant, Racine County, Wisconsin, to-wit:

All of that part of the East One-Half (½) of Section Twenty-Two (22), Township Three (3) North, Range Twenty-Two (22) East, Town of Mt. Pleasant, Racine County, Wisconsin: Begin at the intersection of the North and South One-Quarter (¼) line of Section Twenty-Two (22) with the Northerly line of the right of way of the Chicago, Milwaukee, St. Paul & Pacific Railroad Company; run thence North 83°23'22½" East along the Northerly line of said right of way a distance of One Thousand Four Hundred Fifty-Three and seventy-nine one-hundredths (1453.79) feet to its intersection with the Westerly line of the right of way of the Chicago and North Western Railroad Company; thence North 6°46'15" East along the Westerly line of the last mentioned right of way Six Hundred Fifty-Seven and Forty-Eight one-hundredths (657.48) feet; thence West at right angles to the North and South One-Quarter (¼) line of Section Twenty-Two (22) a distance of One Thousand Five Hundred Twenty-One and Sixty-Five one-hundredths (1521.65) feet to the said North and South One-Quarter (¼) line; thence South along said North and South One-Quarter (¼) line Eight Hundred Twenty and Twenty-Five one-hundredths (820.25) feet to the place of beginning.

Containing 1,089,008.85 square feet or 25.0002 acres, more or less.

Said land being in the Town of Mt. Pleasant, Racine County, Wisconsin.

Real Estate Taxes for the year of 1953 to be paid in full by the parties of the first part.

TOGETHER, with all and singular the hereditaments and appurtenances thereunto belonging or in any wise appertaining; and all the estate, right, title, interest, claim or demand whatsoever, of the said parties of the first part, either in law or equity, either in possession or expectancy of, in and to the above bargained premises, and their hereditaments and appurtenances.

TO HAVE AND TO HOLD the said premises as above described with the hereditaments and appurtenances, unto the said party of the second part, and to its successors and assigns forever.

AND THE SAID Warren M. Hansche and Leona D. Hansche, his wife; Raymond V. Hansche and Margaret M. Hansche, his wife; Melvin R. Hansche and M. Evelyn Hansche, his wife, for themselves, their heirs, executors and administrators, do covenant, grant, bargain and agree to and with the said party of the second part, its successors and assigns, that at the time of the ensealing and delivery of these presents they are well seized of the premises above described, as of a good, sure, perfect, absolute and indefeasible estate of inheritance in the law, in fee simple, and that the same are free and clear from all incumbrances whatever, and that the above bargained premises in the quiet and peaceable possession of the said party of the second part, its successors and assigns, against all and every person or persons lawfully claiming the whole or any part thereof, they will forever WARRANT AND DEFEND.

IN WITNESS WHEREOF, the said parties of the first part have hereunto set their hands and seals this 16th day of October, A. D. 1953.

SIGNED AND SEALED IN PRESENCE OF

Lawrence Olson
Stanley R. White

Warren M. Hansche (SEAL)
Leona D. Hansche (SEAL)
Leona D. Hansche
Raymond V. Hansche (SEAL)
Raymond V. Hansche
Margaret M. Hansche (SEAL)
Margaret M. Hansche
Melvin R. Hansche (SEAL)
Melvin R. Hansche
M. Evelyn Hansche (SEAL)
M. Evelyn Hansche

STATE OF WISCONSIN, }
RACINE COUNTY, } ss.

Personally came before me, this 16th day of October, A. D. 1953, the above named Warren M. Hansche and Leona D. Hansche, his wife; Raymond V. Hansche and Margaret M. Hansche, his wife; Melvin R. Hansche and M. Evelyn Hansche, his wife, to me known to be the persons who executed the foregoing instrument and acknowledged the same.

C. M. Higgins

Notary Public, Racine County, Wisconsin
My Commission Expires May 9, 1955

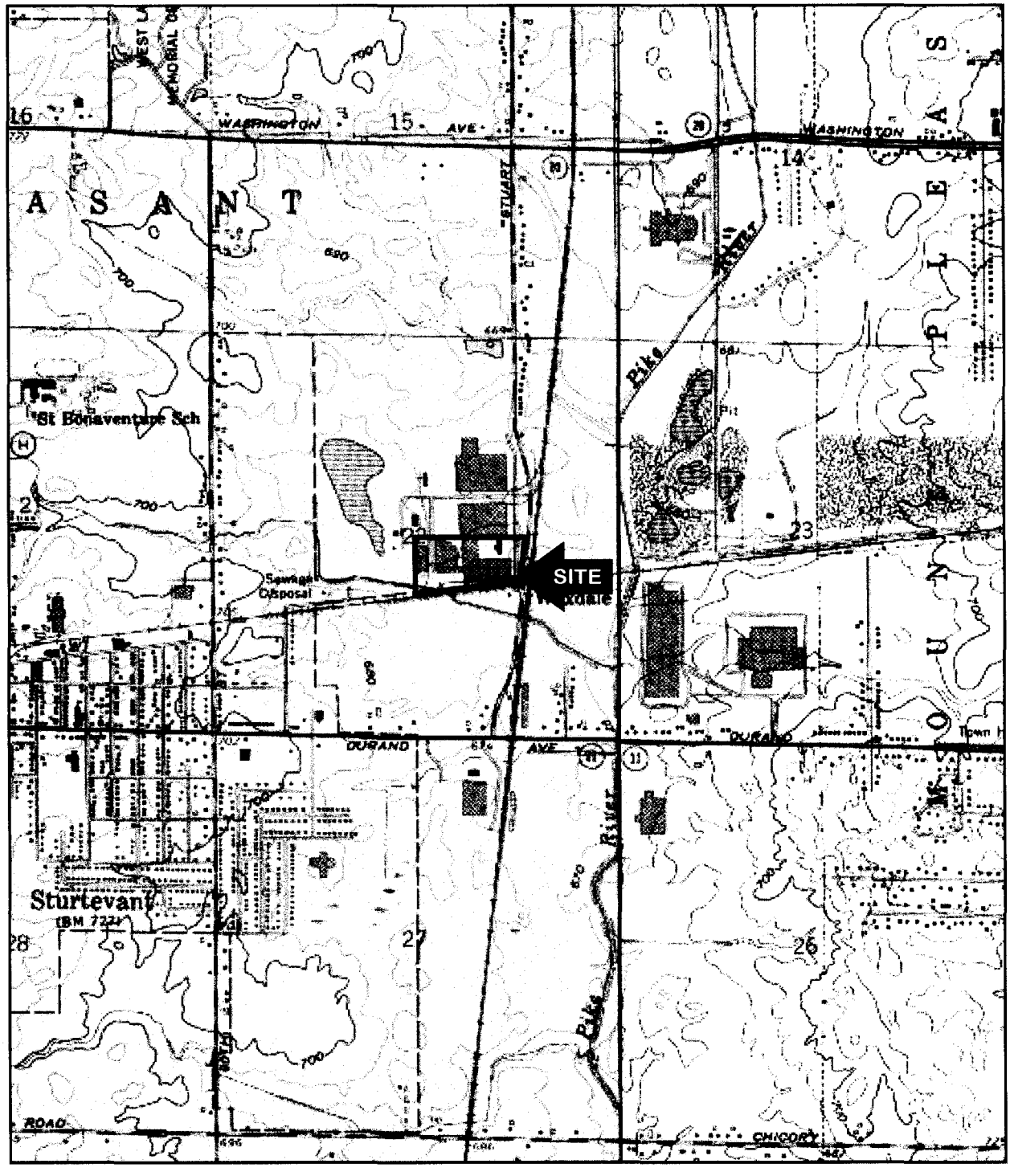

STURTEVANT AND RACINE SOUTH, WISCONSIN
USGS 7.5 MINUTE QUADRANGLE MAPS
CREATED 1959 AND 1958
PHOTOREVISED 1971, 1994 AND 1971, 1976
NW 1/4 SE 1/4 SEC 22 T3N R22E

NORTH

DIAGRAM SCALE
0 1000 2000
1 INCH = 2000 FEET

DRAKE ENVIRONMENTAL, INC.

WAXDALE BUILDING 50 STURTEVANT, WISCONSIN	PROJECT NO: J04142	PM: JAH	VICINITY DIAGRAM	FIGURE 1
	DRAWN BY: JAH	DATE: 12/27/04		
	CHKED BY: JAH	DATE: 12/27/04		
	APRVD BY: JAH	DATE: 12/27/04		

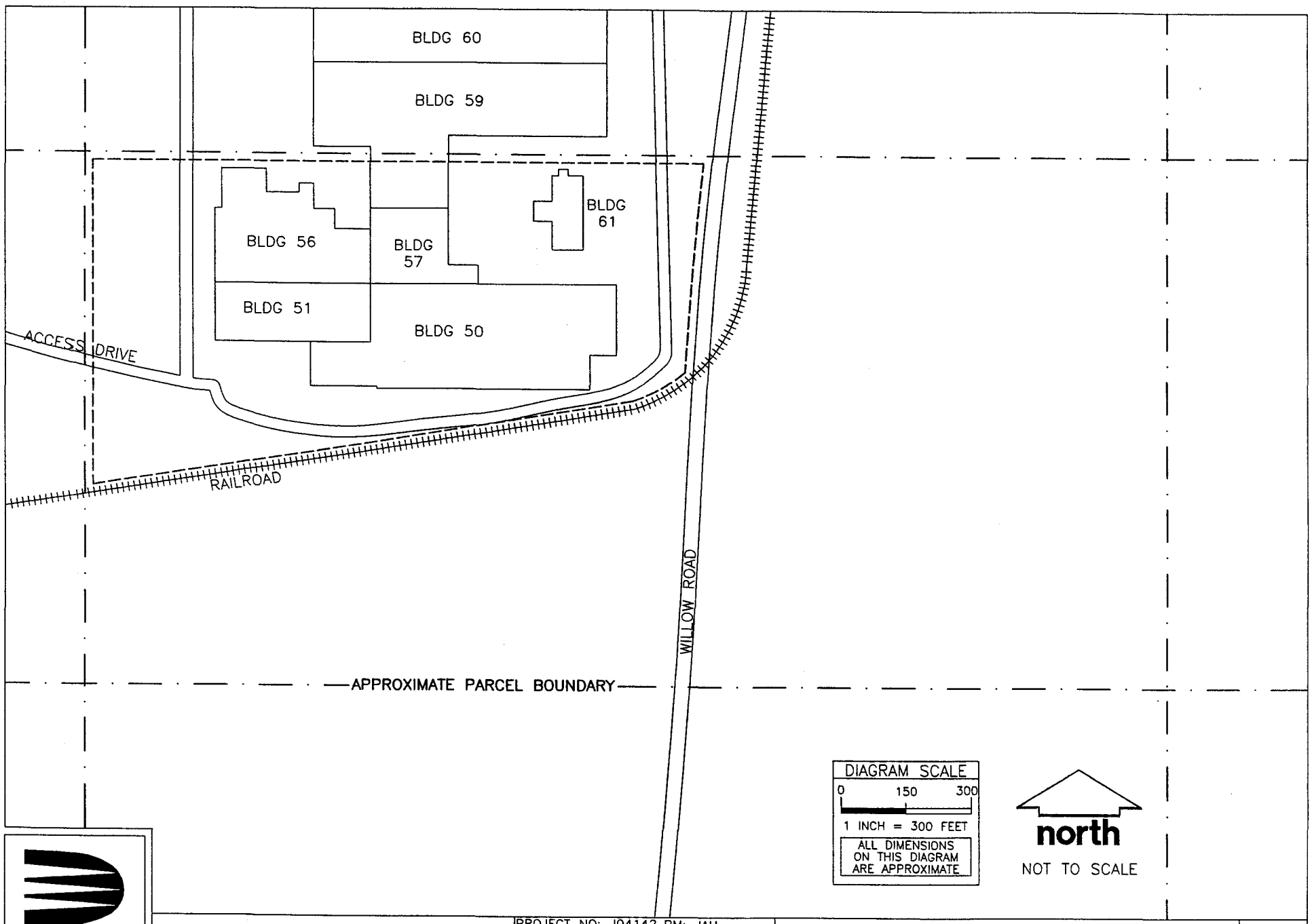

DRAKE ENVIRONMENTAL, INC.

WAXDALE BUILDING 50
STURTEVANT, WISCONSIN

PROJECT NO: J04142	PM: JAH
DRAWN BY: AAM	DATE: 1/9/05
CHECKED BY:	DATE:
APPRVD BY:	DATE:
FILE:	

SITE DIAGRAM

FIGURE 2

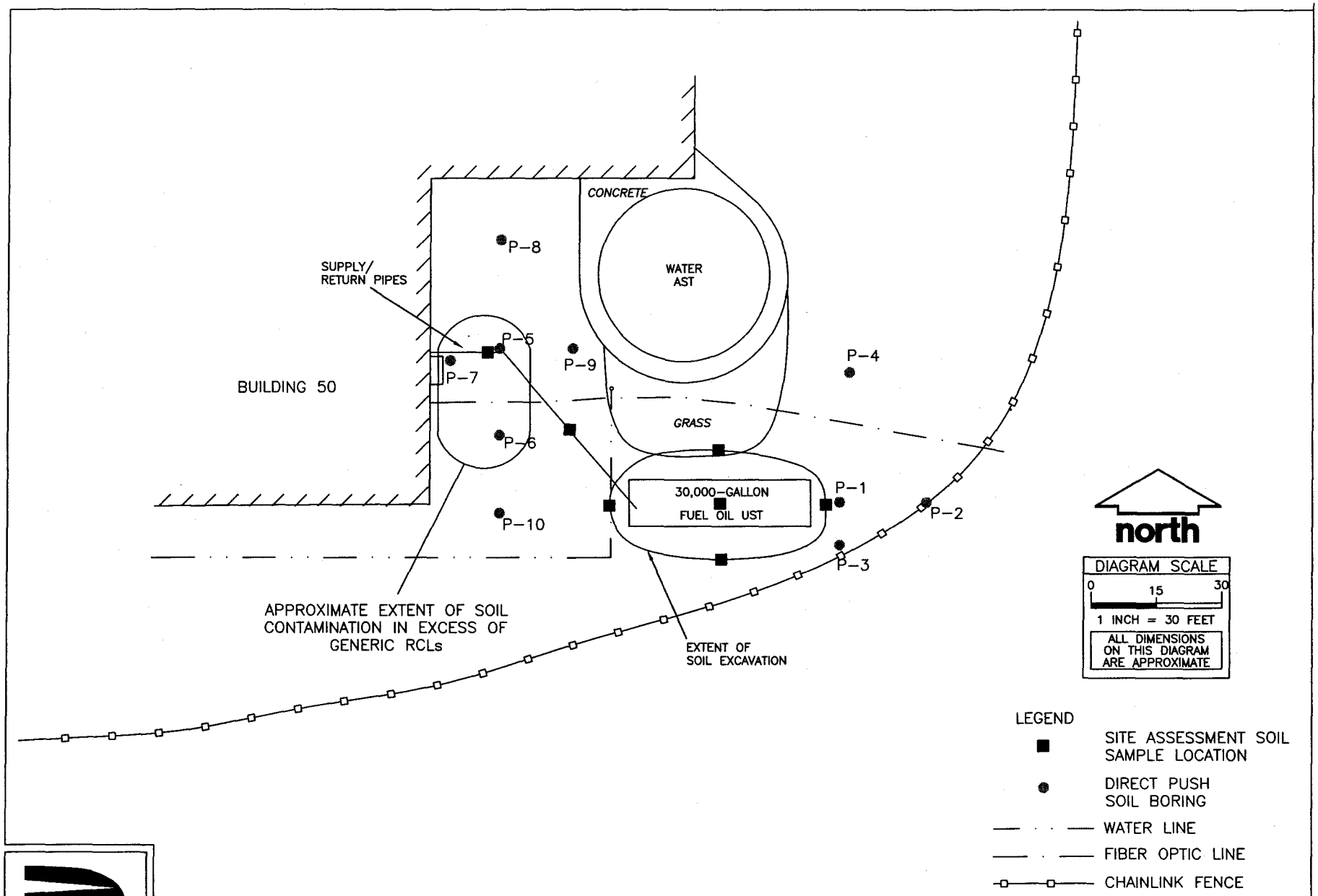

DRAKE ENVIRONMENTAL, INC.

WAXDALE BUILDING 50
STURTEVANT, WISCONSIN

PROJECT NO: J04142	PM: JAH
DRAWN BY: AAM	DATE: 10/27/05
REVISED BY: CMC	DATE: 03/28/08
APPRVD BY: JAH	DATE: 03/28/08
FILE:	

EXTENT OF SOIL CONTAMINATION

FIGURE 4

TABLE 2
Soil Sample Analytical Results - Samples Collected October 27, 2004
Waxdale Building 50
Sturtevant, Wisconsin

Analytical Parameter	North Wall Excavation	South Wall Excavation	East Wall Excavation	West Wall Excavation	Base of Excavation	Pipe Run Sample #1	Pipe Run Sample #2	NR 720 Generic RCL	DNR Suggested RCL (groundwater protection)	DNR Suggested RCL (industrial direct contact)
DRO (ppm)	<6.26	<6.23	49.4	<6.04	<6.23	<6.46	**205**	100	NS	NS
PVOCs (ppb)										
Benzene	<25.0	<25.0	<25.0	<25.0	<25.0	<25.0	<25.0	5.5	NS	NS
Ethylbenzene	<25.0	<25.0	<25.0	<25.0	<25.0	<25.0	<25.0	2,900	NS	NS
Methyl tert-butyl ether	<25.0	<25.0	<25.0	<25.0	<25.0	<25.0	<25.0	NS	NS	NS
Toluene	<25.0	<25.0	<25.0	<25.0	<25.0	<25.0	<25.0	1,500	NS	NS
Trimethylbenzenes	<25.0	<25.0	119.6	<25.0	<25.0	<25.0	71.1	NS	NS	NS
Xylenes	<25.0	<25.0	<25.0	<25.0	<25.0	<25.0	<25.0	4,100	NS	NS
PAHs (ppm)										
Acenaphthene	<0.125	<0.125	<0.124	<0.121	<0.125	<0.129	0.182	NS	38	60,000
Acenaphthylene	<0.251	<0.249	<0.249	<0.242	<0.249	<0.259	<0.256	NS	0.7	360
Anthracene	<0.125	<0.125	<0.124	<0.121	<0.125	<0.129	<0.128	NS	3,000	300,000
Benzo(a)anthracene	<0.0626	<0.0623	0.0800	<0.0604	<0.0623	<0.0646	0.0756	NS	17	3.9
Benzo(a)pyrene	<0.00626	<0.00623	<0.00622	<0.00604	<0.00623	<0.00646	0.0564	NS	48	0.39
Benzo(b)fluoranthene	<0.0626	<0.0623	<0.0622	<0.0604	<0.0623	<0.0646	<0.0641	NS	360	3.9
Benzo(ghi)perylene	<0.125	<0.125	<0.124	<0.121	<0.125	<0.129	<0.128	NS	6,800	39
Benzo(k)fluoranthene	<0.125	<0.125	<0.124	<0.121	<0.125	<0.129	<0.128	NS	870	39
Chrysene	<0.125	<0.125	<0.124	<0.121	<0.125	<0.129	<0.128	NS	37	390
Dibenzo(ah)anthracene	<0.00626	<0.00623	<0.00622	<0.00604	<0.00623	<0.00646	<0.00641	NS	38	0.39
Fluoranthene	<0.125	<0.125	<0.124	<0.121	<0.125	<0.129	0.134	NS	500	40,000
Fluorene	<0.125	<0.125	<0.124	<0.121	<0.125	<0.129	<0.128	NS	100	40,000
Indeno(123-cd)pyrene	<0.0626	<0.0623	<0.0622	<0.0604	<0.0623	<0.0646	<0.0641	NS	680	3.9
1-Methylnaphthalene	<0.125	<0.125	<0.124	<0.121	<0.125	<0.129	0.233	NS	23	70,000
2-Methylnaphthalene	<0.125	<0.125	0.154	<0.121	<0.125	<0.129	0.169	NS	20	40,000
Naphthalene	<0.125	<0.125	<0.124	<0.121	<0.125	<0.129	<0.128	NS	0.4	110
Phenanthrene	<0.125	<0.125	<0.124	<0.121	<0.125	<0.129	0.141	NS	1.8	390
Pyrene	<0.125	<0.125	0.483	<0.121	<0.125	<0.129	0.191	NS	8,700	30,000

TABLE 3 (Page 1 of 3)
Soil Sample Analytical Results - Samples Collected October 26, 2005
Waxdale Building 50
Sturtevant, Wisconsin

Analytical Parameter	P-1 2'-4' bgs	P-1 8'-10' bgs	P-2 8'-10' bgs	P-3 8'-10' bgs	P-4 8'-10' bgs	NR 720 Generic RCL	DNR Suggested RCL (groundwater protection)	DNR Suggested RCL (industrial direct contact)
DRO (ppm)	<2.6	<2.6	<2.6	<2.6	6.5	100	NS	NS
PVOCs (ppb)								
Benzene	29*	30*	38*	31*	31*	5.5	NS	NS
Ethylbenzene	<25	<25	<25	<25	<25	2,900	NS	NS
Methyl tert-butyl ether	<25	<25	<25	<25	<25	NS	NS	NS
Toluene	<25	<25	<25	<25	<25	1,500	NS	NS
Trimethylbenzenes	<25	<25	<25	<25	<25	NS	NS	NS
Xylenes	<25	<25	<25	<25	<25	4,100	NS	NS
PAHs (ppm)								
Acenaphthene	<0.0037	<0.0037	<0.0037	<0.0037	<0.0037	NS	38	60,000
Acenaphthylene	<0.0016	<0.0016	<0.0016	<0.0016	<0.0016	NS	0.7	360
Anthracene	<0.0042	<0.0042	<0.0042	<0.0042	<0.0042	NS	3,000	300,000
Benzo(a)anthracene	<0.0028	<0.0028	<0.0028	<0.0028	<0.0028	NS	17	3.9
Benzo(a)pyrene	<0.0027	<0.0027	<0.0027	<0.0027	<0.0027	NS	48	0.39
Benzo(b)fluoranthene	<0.0023	<0.0023	<0.0023	<0.0023	<0.0023	NS	360	3.9
Benzo(ghi)perylene	<0.0051	<0.0051	<0.0051	<0.0051	<0.0051	NS	6,800	39
Benzo(k)fluoranthene	<0.0019	<0.0019	<0.0019	<0.0019	<0.0019	NS	870	39
Chrysene	<0.0023	<0.0023	<0.0023	<0.0023	<0.0023	NS	37	390
Dibenzo(ah)anthracene	<0.0042	<0.0042	<0.0042	<0.0042	<0.0042	NS	38	0.39
Fluoranthene	<0.0035	<0.0035	<0.0035	<0.0035	<0.0035	NS	500	40,000
Fluorene	<0.0022	<0.0022	<0.0022	<0.0022	<0.0022	NS	100	40,000
Indeno(123-cd)pyrene	<0.0048	<0.0048	<0.0048	<0.0048	<0.0048	NS	680	3.9
1-Methylnaphthalene	<0.0027	<0.0027	<0.0027	<0.0027	<0.0027	NS	23	70,000
2-Methylnaphthalene	<0.0015	<0.0015	<0.0015	<0.0015	<0.0015	NS	20	40,000
Naphthalene	<0.0017	<0.0017	<0.0017	<0.0017	<0.0017	NS	0.4	110
Phenanthrene	<0.0021	<0.0021	<0.0021	<0.0021	<0.0021	NS	1.8	390
Pyrene	<0.0062	<0.0062	<0.0062	<0.0062	<0.0062	NS	8,700	30,000

* = laboratory artifact

TABLE 3 (Page 2 of 3)
Soil Sample Analytical Results - Samples Collected October 26, 2005
Waxdale Building 50
Sturtevant, Wisconsin

Analytical Parameter	P-5 2'-4' bgs	P-5 4'-6' bgs	P-5 8'-10' bgs	P-6 2'-4' bgs	P-6 8'-10' bgs	NR 720 Generic RCL	DNR Suggested RCL (groundwater protection)	DNR Suggested RCL (industrial direct contact)
DRO (ppm)	**160**	17	3.8	**210**	<2.6	100	NS	NS
PVOCs (ppb)								
Benzene	<25	32*	28*	<25	<25	5.5	NS	NS
Ethylbenzene	<25	<25	<25	<25	<25	2,900	NS	NS
Methyl tert-butyl ether	<25	<25	<25	<25	<25	NS	NS	NS
Toluene	<25	<25	<25	<25	<25	1,500	NS	NS
Trimethylbenzenes	<25	107	<25	63	<25	NS	NS	NS
Xylenes	<25	<25	<25	<25	30	4,100	NS	NS
PAHs (ppm)								
Acenaphthene	0.90	0.36	0.035	0.30	<0.0037	NS	38	60,000
Acenaphthylene	**2.3**	**1.0**	<0.0016	<0.0016	<0.0016	NS	0.7	360
Anthracene	<0.0042	<0.0042	<0.0042	0.33	<0.0042	NS	3,000	300,000
Benzo(a)anthracene	<0.0028	<0.0028	<0.0028	<0.0028	<0.0028	NS	17	3.9
Benzo(a)pyrene	<0.0027	<0.0027	<0.0027	<0.0027	<0.0027	NS	48	0.39
Benzo(b)fluoranthene	<0.0023	<0.0023	<0.0023	<0.0023	<0.0023	NS	360	3.9
Benzo(ghi)perylene	<0.0051	<0.0051	<0.0051	<0.0051	<0.0051	NS	6,800	39
Benzo(k)fluoranthene	<0.0019	<0.0019	<0.0019	<0.0019	<0.0019	NS	870	39
Chrysene	<0.0023	<0.0023	<0.0023	<0.0023	<0.0023	NS	37	390
Dibenzo(ah)anthracene	<0.0042	<0.0042	<0.0042	<0.0042	<0.0042	NS	38	0.39
Fluoranthene	<0.0035	<0.0035	<0.0035	<0.0035	<0.0035	NS	500	40,000
Fluorene	<0.0022	<0.0022	<0.0022	<0.0022	<0.0022	NS	100	40,000
Indeno(123-cd)pyrene	<0.0048	<0.0048	<0.0048	<0.0048	<0.0048	NS	680	3.9
1-Methylnaphthalene	9.4	1.7	<0.0027	<0.0027	<0.0027	NS	23	70,000
2-Methylnaphthalene	3.5	<0.0015	<0.0015	<0.0015	<0.0015	NS	20	40,000
Naphthalene	0.21	<0.0017	<0.0017	<0.0017	<0.0017	NS	0.4	110
Phenanthrene	<0.0021	1.3	0.096	<0.0021	<0.0021	NS	1.8	390
Pyrene	<0.0062	<0.0062	<0.0062	0.96	<0.0062	NS	8,700	30,000

* = laboratory artifact

TABLE 3 (Page 3 of 3)
Soil Sample Analytical Results - Samples Collected October 26, 2005
Waxdale Building 50
Sturtevant, Wisconsin

Analytical Parameter	P-7 2'-4' bgs	P-7 6'-8' bgs	P-8 2'-4' bgs	P-9 4'-6' bgs	P-10 8'-10' bgs	NR 720 Generic RCL	DNR Suggested RCL (groundwater protection)	DNR Suggested RCL (industrial direct contact)
DRO (ppm)	5.4	10	<2.6	10	3.9	100	NS	NS
PVOCs (ppb)								
Benzene	28*	37*	34*	27*	35*	5.5	NS	NS
Ethylbenzene	<25	55	<25	<25	<25	2,900	NS	NS
Methyl tert-butyl ether	<25	<25	<25	<25	<25	NS	NS	NS
Toluene	<25	<25	<25	<25	<25	1,500	NS	NS
Trimethylbenzenes	25	160	<25	<25	<25	NS	NS	NS
Xylenes	<25	38	<25	<25	<25	4,100	NS	NS
PAHs (ppm)								
Acenaphthene	0.39	<0.0037	<0.0037	<0.0037	<0.0037	NS	38	60,000
Acenaphthylene	**0.85**	<0.0016	<0.0016	<0.0016	<0.0016	NS	0.7	360
Anthracene	0.42	<0.0042	<0.0042	<0.0042	<0.0042	NS	3,000	300,000
Benzo(a)anthracene	<0.0028	<0.0028	<0.0028	<0.0028	<0.0028	NS	17	3.9
Benzo(a)pyrene	<0.0027	<0.0027	<0.0027	<0.0027	<0.0027	NS	48	0.39
Benzo(b)fluoranthene	<0.0023	<0.0023	<0.0023	<0.0023	<0.0023	NS	360	3.9
Benzo(ghi)perylene	<0.0051	<0.0051	<0.0051	<0.0051	<0.0051	NS	6,800	39
Benzo(k)fluoranthene	<0.0019	<0.0019	<0.0019	<0.0019	<0.0019	NS	870	39
Chrysene	<0.0023	<0.0023	<0.0023	<0.0023	<0.0023	NS	37	390
Dibenzo(ah)anthracene	<0.0042	<0.0042	<0.0042	<0.0042	<0.0042	NS	38	0.39
Fluoranthene	<0.0035	<0.0035	<0.0035	<0.0035	<0.0035	NS	500	40,000
Fluorene	<0.0022	<0.0022	<0.0022	<0.0022	<0.0022	NS	100	40,000
Indeno(123-cd)pyrene	<0.0048	<0.0048	<0.0048	<0.0048	<0.0048	NS	680	3.9
1-Methylnaphthalene	2.0	0.027	<0.0027	<0.0027	<0.0027	NS	23	70,000
2-Methylnaphthalene	0.11	0.040	<0.0015	<0.0015	<0.0015	NS	20	40,000
Naphthalene	<0.0017	<0.0017	<0.0017	<0.0017	<0.0017	NS	0.4	110
Phenanthrene	1.6	<0.0021	<0.0021	0.0033	0.011	NS	1.8	390
Pyrene	<0.0062	<0.0062	<0.0062	<0.0062	<0.0062	NS	8,700	30,000

* = laboratory artifact

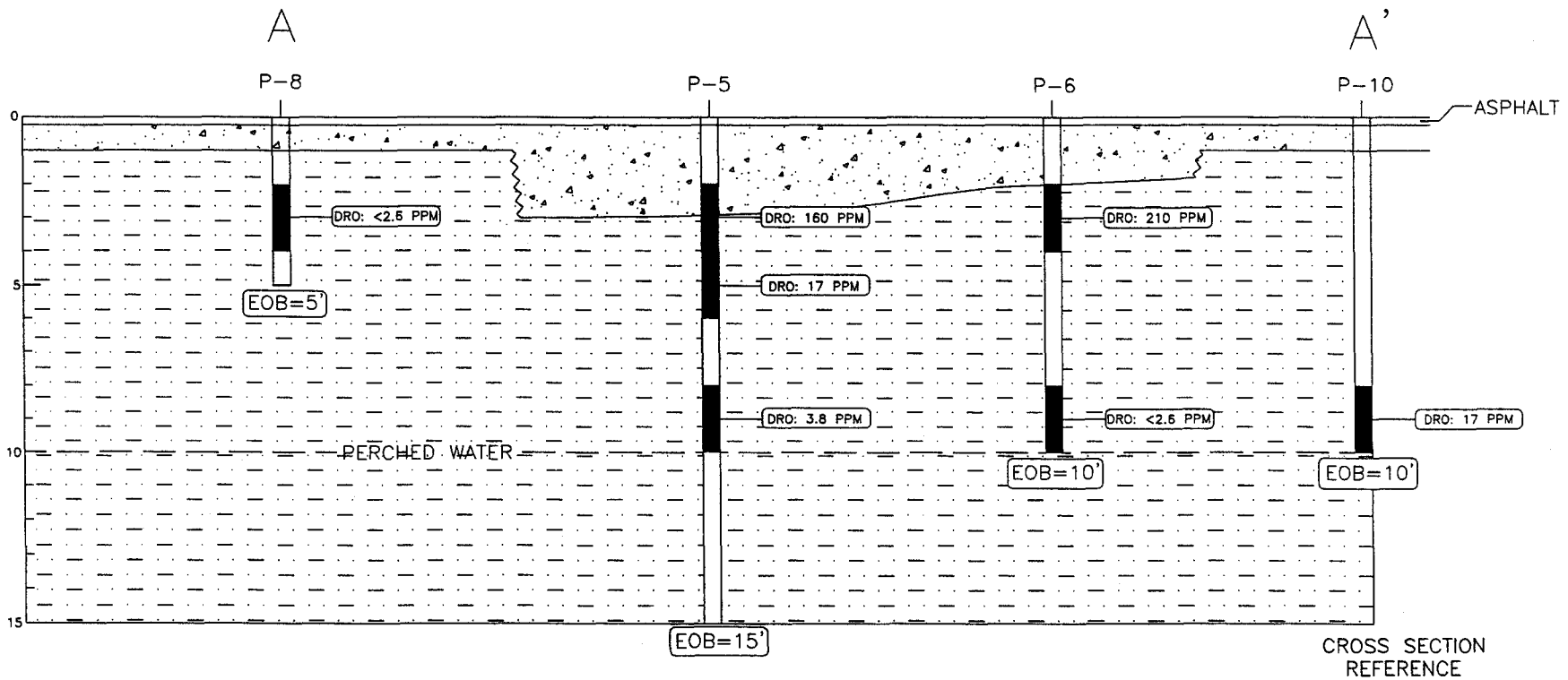

CROSS SECTION REFERENCE

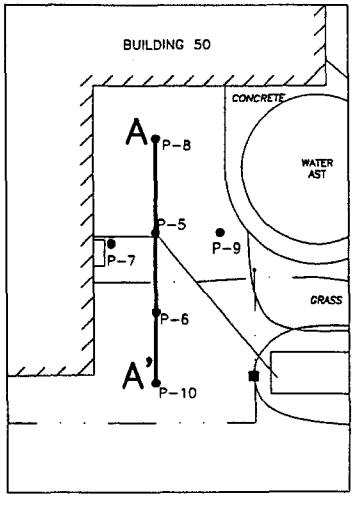

LEGEND

CLAY

GRAVEL

LABORATORY SAMPLE

HORIZONTAL SCALE: 1" = 10'

VERTICAL SCALE: 1" = 5'

DRAKE ENVIRONMENTAL, INC.

WAXDALE BUILDING 50
STURTEVANT, WISCONSIN

PROJECT NO: J04142	PM: JAH
DRAWN BY: AAM	DATE: 12/21/05
CHECKED BY:	DATE:
APPRVD BY:	DATE:
FILE:	

CROSS SECTION
A – A'

FIGURE
5

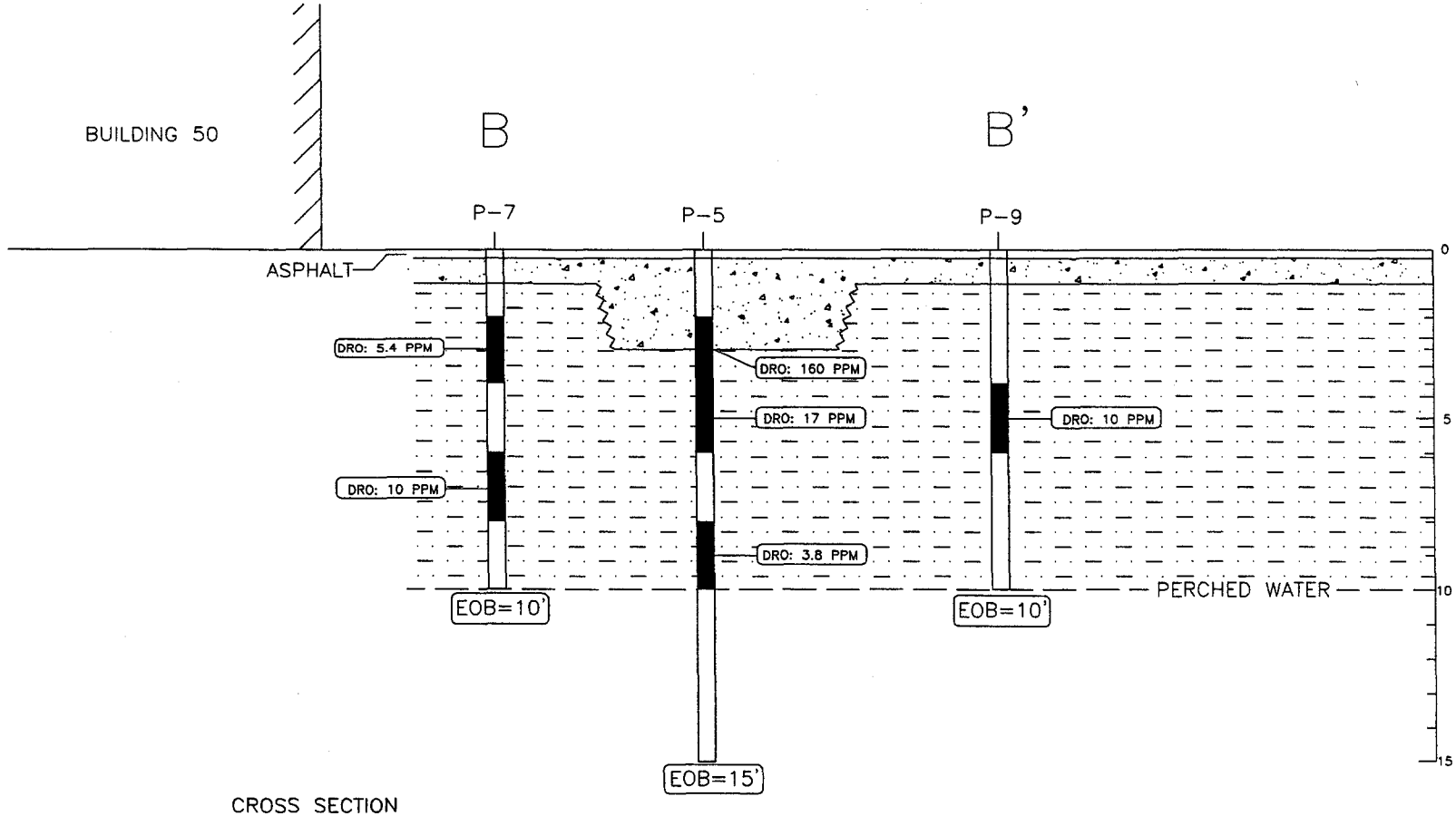

CROSS SECTION REFERENCE

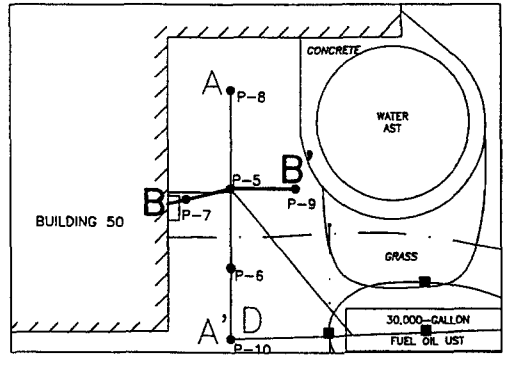

LEGEND

CLAY

GRAVEL

LABORATORY SAMPLE

HORIZONTAL SCALE: 1" = 10'

VERTICAL SCALE: 1" = 5'

DRAKE ENVIRONMENTAL, INC.

WAXDALE BUILDING 50
STURTEVANT, WISCONSIN

PROJECT NO: J04142	PM: JAH
DRAWN BY: AAM	DATE: 12/21/05
CHECKED BY:	DATE:
APPRVD BY:	DATE:
FILE:	

CROSS SECTION
B – B'

FIGURE
6

SC Johnson
A FAMILY COMPANY

S. C. Johnson & Son, Inc.
1525 Howe Street
Racine, WI 53403-2236
262.260.2000

April 12, 2007

Wisconsin Department of Natural Resources
Bureau of Remediation and Redevelopment
PO Box 7921
101 South Webster Street
Madison, WI 53707-7921

Subject: SC Johnson, Waxdale Facility. BRRTS #03-52-534485

To Whom It May Concern:

To the best of my knowledge, the above-referenced site is contained within the parcel described on the attached warranty deed recorded in Racine County, Volume 552, Page 375.

Sincerely,

James Mueller
Environmental Risk Manager
S.C. Johnson & Son, Inc.
1525 Howe Street, MS 221
Racine, WI 53403