GIS REGISTRY INFORMATION

SITE NAME: FORMER AMOCO SERVICE STATION NO. 15219

BRRTS #: 02-41-442993 **FID # (if appropriate):** 241176760

COMMERCE # (if appropriate):

CLOSURE DATE: 06/27/2005

STREET ADDRESS: 3114 N SHERMAN BLVD

CITY: MILWAUKEE, WISCONSIN

SOURCE PROPERTY GPS COORDINATES (meters in WTM91 projection): X= 685541 Y= 291190

CONTAMINATED MEDIA: Groundwater ☐ Soil ☐ Both ☒

OFF-SOURCE GW CONTAMINATION >ES: ☒ Yes ☐ No

IF YES, STREET ADDRESS 1:

GPS COORDINATES (meters in WTM91 projection): X= 685507 Y= 291229

OFF-SOURCE SOIL CONTAMINATION >Generic or Site-Specific RCL (SSRCL): ☐ Yes ☒ No

IF YES, STREET ADDRESS 1:

GPS COORDINATES (meters in WTM91 projection): X= Y=

CONTAMINATION IN RIGHT OF WAY: ☐ Yes ☒ No

DOCUMENTS NEEDED:

Closure Letter, and any conditional closure letter issued ☒

Copy of most recent deed, including legal description, for all affected properties ☒

Certified survey map or relevant portion of the recorded plat map (*if referenced in the legal description*) for all affected properties ☒

County Parcel ID number, *if used for county*, for all affected properties ☒

Location Map which outlines all properties within contaminated site boundaries on USGS topographic map or plat map in sufficient detail to permit the parcels to be located easily (8.5x14" if paper copy). If groundwater standards are exceeded, the map must also include the location of all municipal and potable wells within 1200' of the site. ☒

Detailed Site Map(s) for all affected properties, showing buildings, roads, property boundaries, contaminant sources, utility lines, monitoring wells and potable wells. (8.5x14", if paper copy) This map shall also show the location of all contaminated public streets, highway and railroad rights-of-way in relation to the source property and in relation to the boundaries of groundwater contamination exceeding ch. NR 140 ESs and soil contamination exceeding ch. NR 720 generic or SSRCLs. ☒

Tables of Latest Groundwater Analytical Results (no shading or cross-hatching) ☒

Tables of Latest Soil Analytical Results (no shading or cross-hatching) ☒

Isoconcentration map(s), *if required for site investigation (SI)* (8.5x14" if paper copy). The isoconcentration map should have flow direction and extent of groundwater contamination defined. **If not available, include the latest extent of contaminant plume map.** ☒

GW: Table of water level elevations, with sampling dates, and free product noted if present ☒

GW: Latest groundwater flow direction/monitoring well location map (should be 2 maps if maximum variation in flow direction is greater than 20 degrees) ☒

SOIL: Latest horizontal extent of contamination exceeding generic or SSRCLs, with one contour ☐

Geologic cross-sections, *if required for SI.* (8.5x14' if paper copy) ☐

RP certified statement that legal descriptions are complete and accurate ☒

Copies of off-source notification letters (if applicable) ☒

Letter informing ROW owner of residual contamination (if applicable)(public, highway or railroad ROW) ☒

Copy of (soil or land use) deed restriction(s) or deed notice *if any required as a condition of closure* ☐

State of Wisconsin \ DEPARTMENT OF NATURAL RESOURCES

WISCONSIN
DEPT. OF NATURAL RESOURCES

Jim Doyle, Governor
Scott Hassett, Secretary
Gloria L. McCutcheon, Regional Director

Southeast Region Headquarters
2300 N. Dr. Martin Luther King, Jr. Drive
Milwaukee, Wisconsin 53212-3128
FAX 414-263-8606
Telephone 414-263-8500
TTY Access via relay - 711

June 27, 2005

Mr. Raymond Stoelting
Environmental Business Manager
Atlantic Richfield Company (a BP affiliated company)
P.O.Box 642
Chanhassen, MN 55317-9998

Subject: Final Case Closure, Former Amoco Service Station No. 15219, 3114 N. Sherman Blvd
Milwaukee, Wisconsin. Delta Project No. GO27M, BRRTs # 02-41-442993, FID # 241176760

Dear Mr. Stoelting:

On June 27, 2005 your request for closure of the case described above was reviewed by the Department of Natural Resources, Milwaukee Service Center. The Department reviews environmental remediation cases for compliance with state rules and statutes to maintain consistency in the closure of these cases. On February 23, 2005 you were notified that condition closure/ case denial was granted to this case.
On April 29, 2005 the Department received correspondence indicating that you have complied with the condition of closure. The condition of closure was to abandon the monitoring wells on site according to ch NR 141 and submit the well abandonment forms to the Department. Based on the correspondence and data provided, it appears that your case meets the requirements of ch. NR. 726, Wis. Adm. Code, and case closure will be granted if the following conditions are fulfilled: the monitoring wells on this site are abandoned in compliance with ch. NR 141, Wis. Adm. Code.

The Department has received a complete GIS packet for the site and your site will be listed on the DNR Remediation and Redevelopment GIS Registry of Closed Remediation Sites. Information that was submitted with your closure request application will be included on the registry. To review the sites on the GIS Registry Web page, visit http://www.dnr.state.wi.us/org/water/dgw/gw/.

Please be aware that this case may be reopened pursuant to s. NR 726.09, Wis. Adm. Code, if additional information regarding site conditions indicates that contamination on or from the site poses a threat to public health, safety or welfare, or the environment.

The department appreciates your efforts to restore the environment at this site. If you have any questions regarding this letter, please contact me at (414)-263-8607.

Sincerely,

Binyoti F. Amungwafor
Hydrogeologist

CC: Ms. Lisa Noblet, Delta Environmental Consultants, Inc.
Case File.

SUBJECT PROPERTY

Site Address:

City of Milwaukee Park Property
3120 N. Sherman Blvd.
Milwaukee, Wisconsin

Property Owner:

City of Milwaukee Real Estate Department
Second Floor
809 North Broadway
Milwaukee, WI 53202

Responsible Party:

Ray Stoelting
Environmenta Business Manager
Atlantic Richfield Company
(a BP affiliated company)
P.O. Box 642, Chanhassen,
MN 55317-9998
telephone (952) 975-3817

PIN: 287-0559-000-3

Volume and page where deed is recorded: Volume 1570, Page 1-5
Volume 1569, Page 623-624

WTM Coordinates: 685507, 291229

Soil Contamination: NO

Groundwater Contamination: POTENTIALLY

THIS INDENTURE, Made this 13th day of June, A. D. 1939 between Violet Graebel, Emma Urban, John P. Kenngott and Ida Kenngott, his wife, Robert Kenngott, Jr., also known as Robert W. Kenngott, Jr., and Jessie Kenngott, his wife, and Frank W. Kenngott and Sadie Kenngott, his wife, parties of the first part, and the City of Milwaukee, a municipal corporation organized and existing under and by virtue of the laws of the State of Wisconsin, located in Milwaukee County, Wisconsin, party of the second part.

WITNESSETH, That the said parties of the first part, for and in consideration of the sum of twenty-eight hundred dollars ($2800.00) to them in hand paid by the said party of the second part, the receipt whereof is hereby confessed and acknowledged, have given, granted, bargained, sold, remised, released, aliened, conveyed and confirmed, and by these presents do give, grant, bargain, sell, remise, release, alien, convey and confirm unto the said party of the second part, its successors and assigns forever, the following described real estate, situated in the City and County of Milwaukee and State of Wisconsin, to-wit:

"South twenty-five (25) feet of Lot fourteen (14) and north ten (10) feet of Lot fifteen (15), in Block nine (9), Continuation of Fond du Lac Avenue Park, in the southwest one-quarter of Section 12, Town 7 north, Range 21 east"

TOGETHER with all and singular the hereditaments and appurtenances thereunto belonging or in any wise appertaining; and all the estate, right, title, interest, claim or demand whatsoever, of the said parties of the first part, either in law or equity, either in possession or expectancy of, in and to the above bargained premises and their hereditaments and appurtenances.

TO HAVE AND TO HOLD the said premises as above described with the hereditaments and appurtenances, unto the said party of the second part, and to its successors and assigns FOREVER.

And the said Violet Graebel, Emma Urban, John P. Kenngott and Ida Kenngott, his wife, Robert Kenngott, Jr., also known as Robert W. Kenngott, Jr., and Jessie Kenngott, his wife, and Frank W. Kenngott and Sadie Kenngott, his wife, for themselves, their heirs, executors and administrators, do covenant, grant, bargain and agree to and with the said party of the second part, its successors and assigns, that at the time of the ensealing and delivery of these presents, they are well seized of the premises above described, as of a good, sure, perfect, absolute and indefeasible estate of inheritance in the law, in fee simple, and that the same are free and clear from all incumbrances whatever, and that the above bargained premises in the quiet and peaceable possession of the said party of the second part, its successors and assigns, against all and every person or persons lawfully claiming the whole or any part thereof, they will forever WARRANT AND DEFEND.

IN WITNESS WHEREOF, the said parties of the first part have hereunto set their hands and seals this 13th day of June, A. D. 1939.

Signed and sealed in presence of:

Eleanore Wachs

Estelle P. Draught

Violet Graebel (SEAL)
Violet Graebel

Emma Urban (SEAL)
Emma Urban

John P. Kenngott (SEAL)
John P. Kenngott

Ida Kenngott (SEAL)
Ida Kenngott

Signed and sealed in presence of:

Eleanore Wuchs

Estelle P. Draeger

Robert Kenngott, Jr. (SEAL)

Robert Kenngott, Jr., also known as Robert W. Kenngott, Jr.

Jessie Kenngott (SEAL)

Jessie Kenngott

Signed and sealed in presence of:

Anna E. Clarke

V. Arthur Farrar

Frank W. Kenngott (SEAL)

Frank W. Kenngott

Sadie Kengott (SEAL)

Sadie Kengott

STATE OF WISCONSIN,)
(ss.
MILWAUKEE COUNTY.)

Personally came before me this 19th day of June, A. D. 1939 the above named Violet Graebel, Emma Urban, John P. Kenngott and Ida Kenngott, his wife, to me known to be the persons who executed the foregoing instrument and acknowledged the same.

Notary Public, Milwaukee County, Wis.

My commission expires Feb 23-1941.

STATE OF ~~ILLINOIS~~ Wisconsin)
) ss.
Milwaukee COUNTY.)

Personally came before me this 17th day of June, A. D. 1939 the above named Robert Kenngott, Jr., also known as Robert W. Kenngott, Jr. and Jessie Kenngott, his wife, to me known to be the persons who executed the foregoing instrument and acknowledged the same.

Carol J. Draughn
Notary Public, Milwaukee County, ~~Ill.~~ Wis.
My commission expires Feb 23-1941

STATE OF CALIFORNIA ,)
) ss.
Los Angeles COUNTY.)

Personally came before me this 13th day of June, A. D. 1939 the above named Frank W. Kenngott and Sadie Kenngott, his wife, to me known to be the persons who executed the foregoing instrument and acknowledged the same.

James E. Clarke
Notary Public, Los Angeles County, Calif.
My commission expires March 31, 1940

APPROVED AS TO FORM AND EXECUTION THIS 21st DAY OF June, 1939
Ronald A. Druecker
Assistant City Attorney

Vol 1570 AUG 15

Ft. Capitol
&
Ft. Burleigh

Free 55295 A
5/22-39

OK
TAX COMMISSIONERS OFFICE
7/27/39 193
Deputy Tax Commissioner

COMPTROLLER'S OFFICE
Box No. .....
Doc't No. .....

Ft. Sherman Blvd

No. _____

2225417

AUG-1-39 2202 2225417 SO RE DE

VIOLET GRAEBEL, EMMA URBAN, JOHN P. KENNGOTT and IDA KENNGOTT, HIS WIFE, ROBERT KENNGOTT, JR., also known as ROBERT W. KENNGOTT, JR. and JESSIE KENNGOTT, HIS WIFE, and FRANK W. KENNGOTT and SADIE KENNGOTT, HIS WIFE,

and

CITY OF MILWAUKEE

WARRANTY DEED

REGISTER'S OFFICE, } ss.
Milwaukee County, Wis.
RECEIVED 3 10
for record AUG - 1 1939 at
P M., and recorded in vol 1570 of Deeds
Page 1.
Phillip L. Wirtzfeld
REGISTER OF DEEDS

1.50

RETURN TO
COMPTROLLER'S OFFICE,
City of Milwaukee.

3-MR

WARRANTY DEED—To Corporation

STATE OF WISCONSIN
FORM No. 4

Wisconsin Legal Blank Company
Milwaukee, Wisconsin 14018

VOL 1569 PAGE 623

This indenture, Made this 10th day of July A. D., 19 39.

between Frank J. Henike, single,

part y of the first part, and

City of Milwaukee, a municipal

Corporation duly organized and existing under and by virtue of the laws of the State of Wisconsin, located at Milwaukee, Wisconsin, party of the second part.

Witnesseth, That the said part y of the first part, for and in consideration of the sum of --Thirty-five Hundred and no/100ths ($3,500.00) Dollars

to him in hand paid by the said party of the second part, the receipt whereof is hereby confessed and acknowledged, ha s given, granted, bargained, sold, remised, released, aliened, conveyed and confirmed, and by these presents do es give, grant, bargain, sell, remise, release, alien, convey and confirm unto the said party of the second part, its successors and assigns forever, the following described real estate, situated in the City and County of Milwaukee and State of Wisconsin, to-wit;

"Lot thirteen (13) and north five (5) feet of Lot fourteen (14), Block nine (9), Continuation of Fond du Lac Avenue Park, in the southwest one-quarter (S.W.¼) of Section twelve (12), Town seven (7) north, Range twenty-one (21) east."

Together with all and singular the hereditaments and appurtenances thereunto belonging or in any wise appertaining; and all the estate, right, title, interest, claim or demand whatsoever, of the said part y of the first part, either in law or equity, either in possession or expectancy of, in and to the above bargained premises and their hereditaments and appurtenances.

To have and to hold the said premises as above described with the hereditaments and appurtenances, unto the said party of the second part, and to its successors and assigns FOREVER.

And the said Frank J. Henike, single,

for himself, his heirs, executors and administrators, do es covenant, grant, bargain and agree to and with the said party of the second part, its successors and assigns, that at the time of the ensealing and delivery of these presents he is well seized of the premises above described, as of a good, sure, perfect, absolute and indefeasible estate of inheritance in the law, in fee simple, and that the same are free and clear from all incumbrances whatever,

and that the above bargained premises in the quiet and peaceable possession of the said party of the second

VOL 1569 PAGE 624

part, its successors and assigns, against all and every person or persons lawfully claiming the whole or any part thereof, he will forever WARRANT and DEFEND.

In Witness Whereof, the said party of the first part has hereunto set his hand and seal this 10th day of July, A. D., 1939.

SIGNED AND SEALED IN PRESENCE OF

Herman A. Dilling

Harold M. Budnick

Frank J. Henika (SEAL)

(SEAL)

(SEAL)

(SEAL)

State of Wisconsin, } ss.
MILWAUKEE County.

Personally came before me, this 10th day of July, A. D., 1939,

the above named Frank J. Henika, single,

to me known to be the person who executed the foregoing instrument and acknowledged the same. -

Harold M. Budnick

Notary Public, Milwaukee County, Wis.

My commission expires Jan. 3rd, A. D., 1943

HAROLD M. BUDNICK NOTARY PUBLIC MILWAUKEE CO. WIS.

APPROVED AS TO FORM AND EXECUTION THIS 10th DAY OF July, 1939.

Herman A. Dilling
Assistant City Attorney

Mr. Capitol & Mr. Burleigh

File 55295-B 5/22-39

STATE OF WISCONSIN Law Department WATERTOWN

TAX COMMISSIONERS OFFICE 1939 Deputy Tax Commissioner

OK

COMPTROLLER'S OFFICE

Mr. Sherman Blvd.

No. 2225410

Frank J. Henika, single

to

City of Milwaukee, a municipal corporation

2225410

Warranty Deed

REGISTER'S OFFICE, State of Wisconsin, MILWAUKEE County.

Received for Record this 1 day of AUG 1939 at 9:00 o'clock A.M., and recorded in Vol. 1569 of Deeds on page 623

Register of Deeds

Deputy

RETURN TO COMPTROLLER'S OFFICE

WISCONSIN LEGAL BLANK CO. MILWAUKEE, WISCONSIN.

MAP OF THE CONTINUATION OF

FOND DU LAC AVENUE PARK.

IN THE SOUTH WEST 1/4 OF SECTION 12, TOWN 7 NORTH, OF RANGE 21 EAST,

TOWN OF WAUWATOSA.

Scale 100 ft to the inch.

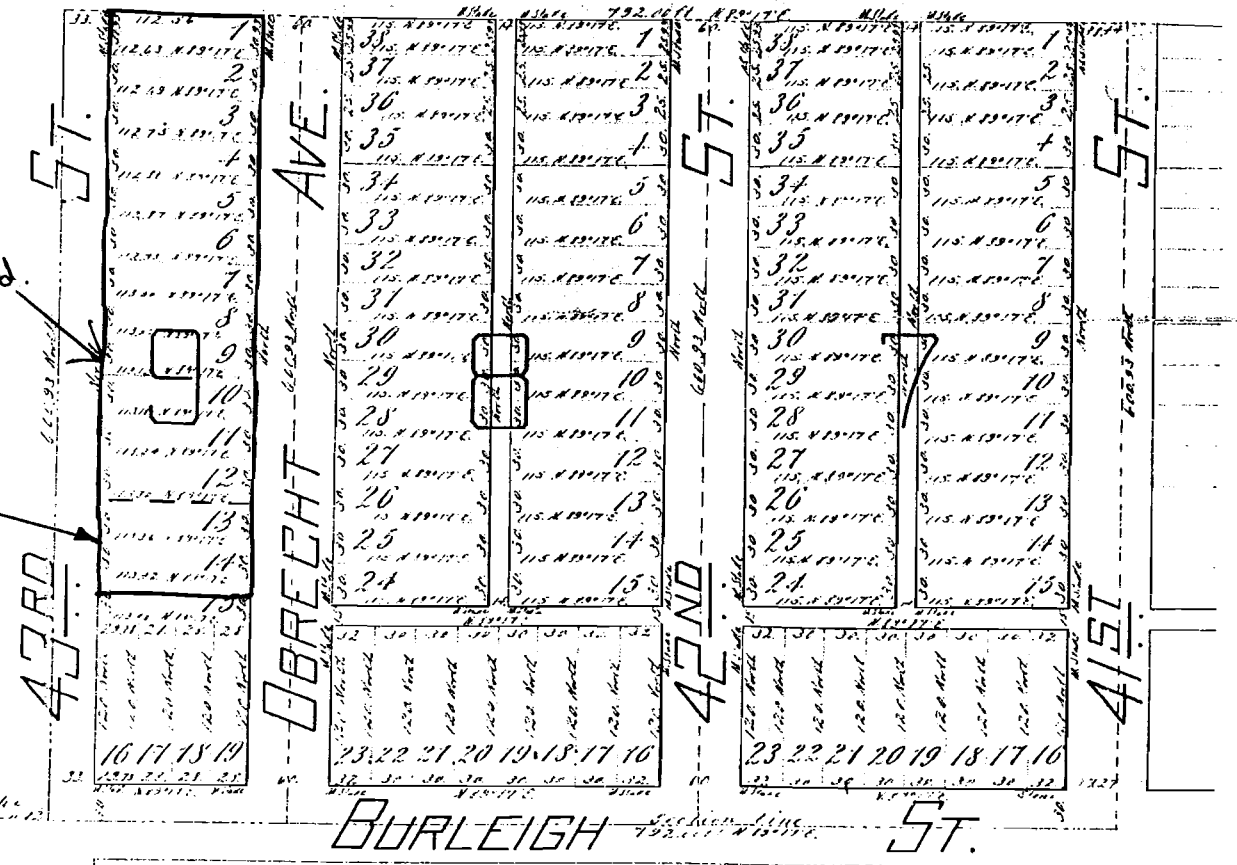

City of Milwaukee property: 3120 N. Sherman Blvd.

Deeds provided for Lots 13, 14, and north portion of Lot 15.

Parcel Identification Number

City of Milwaukee Park Property
3120 N. Sherman Blvd.
Milwaukee, Wisconsin

PIN # 287-0559-000-3

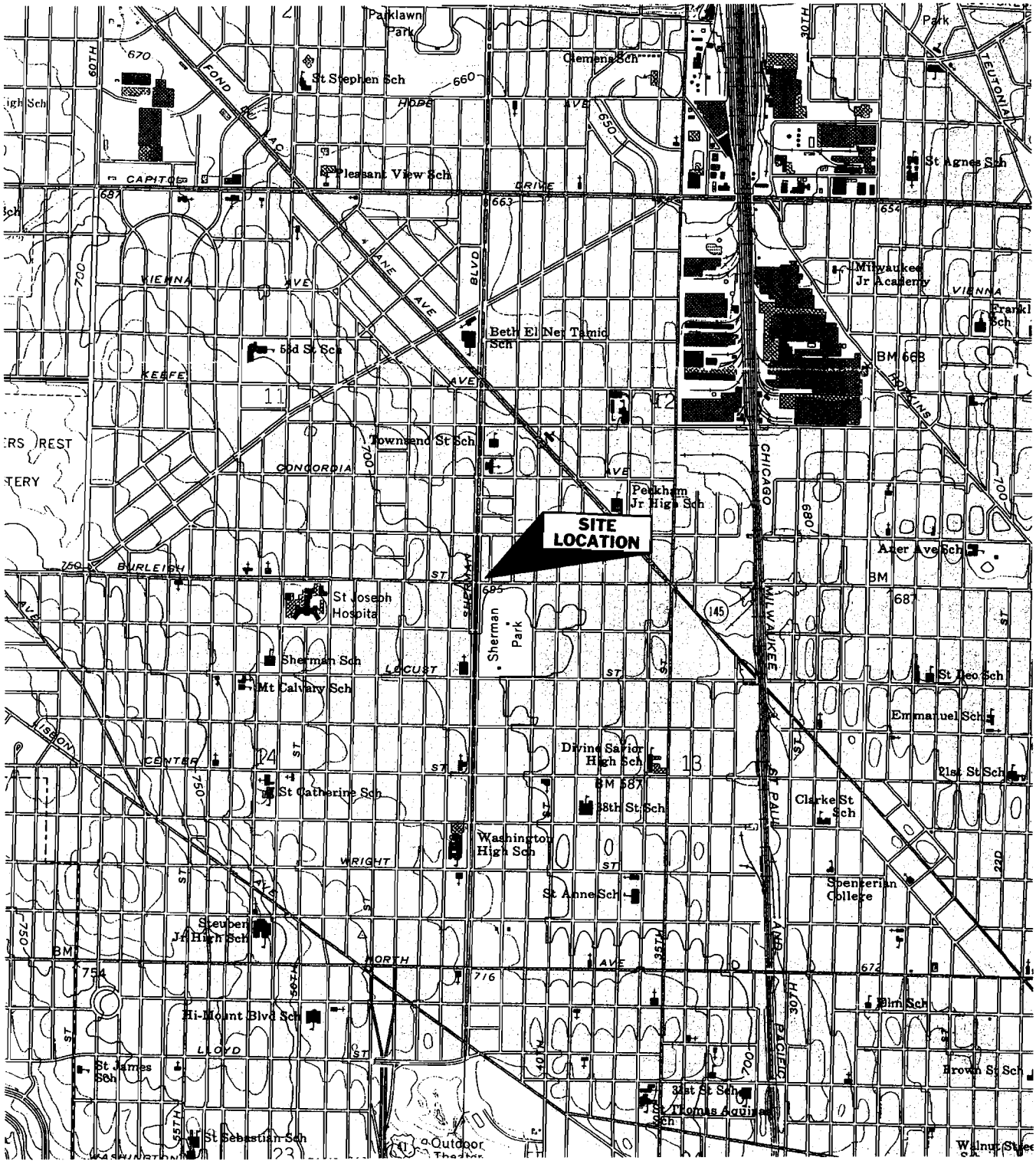

MILWAUKEE QUADRANGLE
WISCONSIN
7.5 MINUTE SERIES (TOPOGRAPHIC)

QUADRANGLE LOCATION

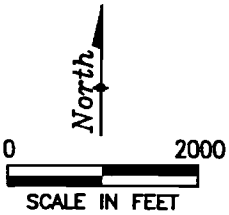

FIGURE 1
SITE LOCATION MAP
AMOCO SERVICE STATION No. 15219
3114 NORTH SHERMAN BOULEVARD
MILWAUKEE, WISCONSIN

PROJECT NO.	PREPARED BY
AMGO-27M	AM
DATE	REVIEWED BY
3/11/04	

Delta Environmental Consultants, Inc.

ArcIMS HTML Viewer Map

Property Boundary Map

City Property
3120 N. Sherman Blvd.
PIN# 287-0559-000-3

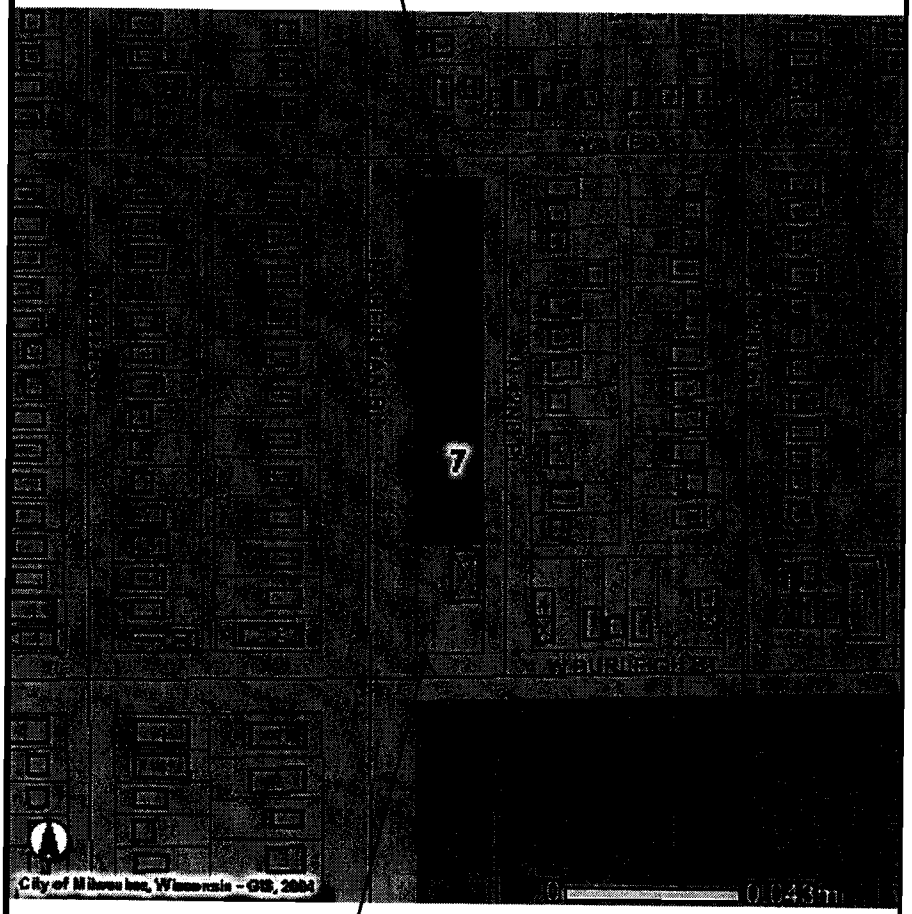

Former Amoco SS#15219
3114 N. Sherman Blvd.
PIN# 287-0561-000-4

Legend

Land Use Symbols

- Building Outlines
- Streets
- Parcels (Outline)
- Parks and Parkways

Aldermanic Districts

Land Use

- Commercial
- Mixed Residential and Commercial
- Multifamily
- Duplex
- Single Family or Condo
- Exempt with Building
- Exempt Open Space
- Vacant Land
- Agricultural and Related
- Manufacturing
- Transportation
- Parcels
- City Limits
- Quarter Sections

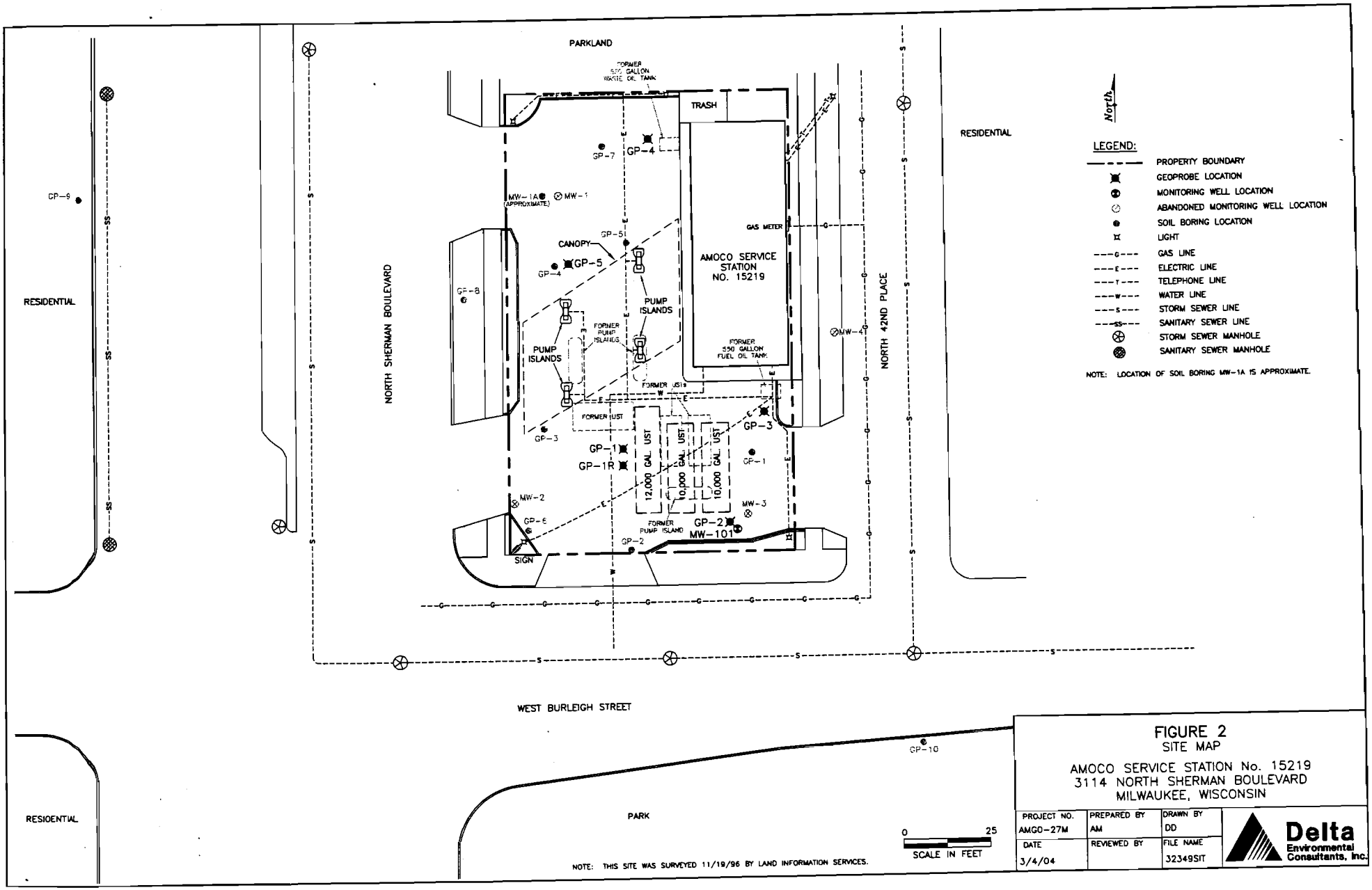

FIGURE 2
SITE MAP

AMOCO SERVICE STATION No. 15219
3114 NORTH SHERMAN BOULEVARD
MILWAUKEE, WISCONSIN

PROJECT NO.	PREPARED BY	DRAWN BY
AMGO-27M	AM	DD
DATE	REVIEWED BY	FILE NAME
3/4/04		32349SIT

Delta Environmental Consultants, Inc.

Table 3
Groundwater Analytical Results Summary - GP-1R to GP-5
BP Service Station No. 15219
3114 North Sherman Blvd.
Milwaukee, Wisconsin
Delta Project No. AMG0-27M

		ANALYTICAL PARAMETERS																				
Sample ID	Date Sampled	Benzene µg/L	Toluene µg/L	Ethylbenzene µg/L	Xylenes µg/L	Total TMBs µg/L	MTBE µg/L	sec-Butylbenzene µg/L	Carbon Tetrachloride µg/L	Chloroform µg/L	Chloromethane µg/L	1,4-Dichlorobenzene µg/L	cis-1,2-Dichloroethene µg/L	Isopropylbenzene µg/L	p-Isopropyltoluene µg/L	Methylene Chloride (1) µg/L	Naphthalene µg/L	n-Propylbenzene µg/L	Tetrachloroethene µg/L	Trichloroethene µg/L	Dissolved Cadmium µg/L	Dissolved Lead µg/L
NR 140 PAL-->		0.5	200	140	1,000	96	12	--	0.5	0.6	0.3	15	7.0	--	--	0.5	8	--	0.5	0.5	0.5	1.5
NR 140 ES -->		**5**	**1,000**	**700**	**10,000**	**480**	**60**	**--**	**5**	**6**	**3**	**75**	**70**	**--**	**--**	**5**	**40**	**--**	**5**	**5**	**5**	**15**
GP-1	09/13/02	DRY	DRY	DRY	DRY	DRY	DRY	DRY	DRY	DRY	DRY	DRY	DRY	DRY	DRY	DRY	DRY	DRY	DRY	DRY	DRY	DRY
GP-1R	09/16/02	**200**	180	72	290	198	**66**	2.2	<1.2	<1.2	2.4 (3)	<1.2	<1.2	4.6	1.7	3.3	**73**	11	<1.2	<1.2	NA	<1.2
GP-2	09/13/02	**370**	4.3	4.2	6.4	2.71	**690**	0.54	2.8	**33**	0.8	<0.25	2.7	2.4	<0.25	0.9	1.8	2.5	**11**	3.7	NA	<1.2
GP-3	09/13/02	0.46	0.47	<0.25	<0.25	0.19	**130**	<0.25	<0.25	<0.25	0.61	<0.25	<0.25	<0.25	<0.25	<0.25	<0.25	<0.25	<0.25	<0.25	NA	<1.2
GP-4	09/14/02	<0.10	0.18	<0.25	<0.25	0.13	**170**	<0.25	<0.25	<0.25	<0.25	0.63	<0.25	<0.25	<0.25	<0.25	<0.25	<0.25	<0.25	<0.25	0.48	<1.2
GP-5	09/14/02	DRY	DRY	DRY	DRY	DRY	DRY	DRY	DRY	DRY	DRY	DRY	DRY	DRY	DRY	DRY	DRY	DRY	DRY	DRY	DRY	DRY
Trip Blank	09/13/02	<0.10	0.18	<0.25	<0.25	<0.10	<0.25	<0.25	<0.25	<0.25	<0.25	<0.25	<0.25	<0.25	<0.25	0.50	<0.25	<0.25	<0.25	<0.25	NA	NA
Trip Blank	09/14/02	<0.10	<0.25	<0.25	<0.25	<0.10	<0.25	<0.25	<0.25	<0.25	<0.25	<0.25	<0.25	<0.25	<0.25	1.9	<0.25	<0.25	<0.25	<0.25	NA	NA

Notes:
< ..... = Not detected at or above the laboratory method detection limit.
(1) ..... = Methylene chloride is a common laboratory solvent and contaminant and was detected in the trip blanks.
(2) ..... = The dissolved lead and dissolved cadmium samples were filtered in the field at the time of collection.
(3) ..... = The laboratory method blank was flagged as being contaminated with chloromethane.
µg/L ..... = micrograms per liter (equivalent of parts per billion)
DRY..... = The well did not produce water one day following installation of the temporary well.
MTBE ..... = methyl tertiary butyl ether
NA ..... = Not analyzed for indicated parameter
TMBs ..... = trimethylbenzenes
NR 140 PAL..... = Rev. 03/00 Wisconsin Adm. Code Chap. NR 140 Preventive Action Limit
NR 140 ES ..... = Rev. 03/00 Wisconsin Adm. Code Chap. NR 140 Enforcement Standard
"BOLD TYPE"..... = The indicated concentration exceeds the NR 140 ES.
Note: **The samples were analyzed for volatile organic compounds using EPA Method 8260. Only PVOCs and additional detected VOC's are listed in the table above.**

Table 5
Groundwater Analytical Results Summary - MW-101
Former Amoco Service Station No. 15219
3114 North Sherman Blvd.
Milwaukee, Wisconsin
Delta Project No. AMG0-27M

MW-101

Date Sampled	Analytical Parameters																					Bio Parameters		
	Benzene	Toluene	Ethylbenzene	Xylenes	Total TMBs	MTBE	sec-Butylbenzene	Carbon Tetrachloride	Chloroform	Chloromethane	1,4-Dichlorobenzene	cis-1,2-Dichloroethene	Isopropylbenzene	p-Isopropyltoluene	Methylene Chloride	Naphthalene	n-Propylbenzene	Tetrachloroethene	Trichloroethene	Dissolved Cadmium[1]	Dissolved Lead[1]	DO	REDOX	Soluble Iron
	µg/L	µg/L	µg/L	µg/L	µg/L	µg/L	µg/L	µg/L	µg/L	µg/L	µg/L	µg/L	µg/L	µg/L	µg/L	µg/L	µg/L	µg/L	µg/L	µg/L	µg/L	ppm	milli Volts	ppm
NR 140 PAL-->	0.5	200	140	1,000	96	12	--	0.5	0.6	0.3	15	7.0	--	--	0.5	8	--	0.5	0.5	0.5	1.5	--	--	--
NR 140 ES -->	**5**	**1,000**	**700**	**10,000**	**480**	**60**	**--**	**5**	**6**	**3**	**75**	**70**	**--**	**--**	**5**	**40**	**--**	**5**	**5**	**5**	**15**	**--**	**--**	**--**
10/01/03	**23**	<1.0	<1.0	<3.0	<1.0	**520**	<1.0	<1.0	<1.0	<1.0	<1.0	3.2	<1.0	<1.0	<1.0	<1.0	<1.0	<1.0	*2.6*	NA	NA	2.6	033	2.0
10/01/03 D	4.4	<1.0	<1.0	<3.0	<1.0	**500**	<1.0	<1.0	<1.0	<1.0	<1.0	1.6	<1.0	<1.0	<1.0	<1.0	<1.0	<1.0	*1.5*	NA	NA			
12/30/03	**17**	<1.0	<1.0	<3.0	<1.0	**370**	<1.0	<1.0	<1.0	<1.0	<1.0	3.9	<1.0	<1.0	<1.0	<1.0	<1.0	<1.0	*1.8*	NA	NA	1.6	045	0.3
12/30/03 D	**15**	<1.0	<1.0	<3.0	<1.0	**390**	<1.0	<1.0	<1.0	<1.0	<1.0	3.5	<1.0	<1.0	<1.0	<1.0	<1.0	<1.0	*1.6*	NA	NA			

Notes:

< ..... = Not detected at or above the laboratory method detection limit

[1] ..... = The dissolved lead and dissolved cadmium samples were filtered in the field at the time of collection

µg/L ..... = micrograms per liter (equivalent to parts per billion)

D ..... = Duplicate sample

DO ..... = Dissolved Oxygen

MTBE ..... = Methyl Tertiary Butyl Ether

NA ..... = Not Analyzed for indicated parameter

ppm ..... = parts per million

REDOX ..... = Reduction/Oxidation potential

TMBs ..... = Trimethylbenzenes

NR 140 PAL..... = Wisconsin Administrative Code Chapter NR 140 Preventive Action Limit

NR 140 ES ..... = Wisconsin Administrative Code Chapter NR 140 Enforcement Standard

"ITALIC TYPE" ..... = Concentrations shown in italics exceed the NR 140 PAL

"BOLD TYPE"..... = Concentrations shown in bold type exceed the NR 140 ES

Note: **The samples were analyzed for volatile organic compounds using EPA Method 8260. Only PVOCs and additional VOCs detected are listed in the table above.**

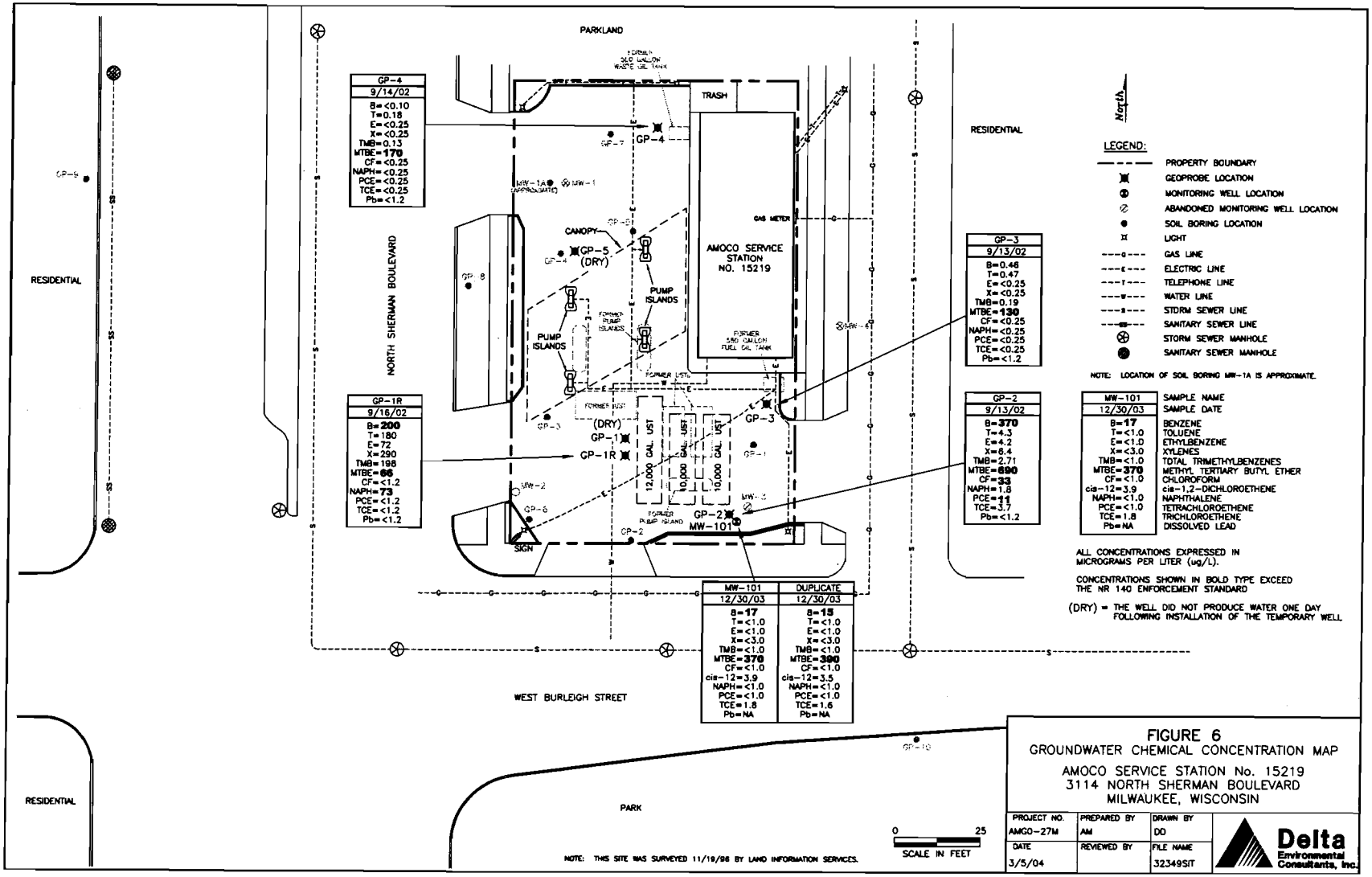

FIGURE 6
GROUNDWATER CHEMICAL CONCENTRATION MAP

AMOCO SERVICE STATION No. 15219
3114 NORTH SHERMAN BOULEVARD
MILWAUKEE, WISCONSIN

PROJECT NO.	PREPARED BY	DRAWN BY
AMGO-27M	AM	DD
DATE	REVIEWED BY	FILE NAME
3/5/04		32349SIT

Delta Environmental Consultants, Inc.

Table 2
Groundwater Elevation Summary
Former Amoco Service Station No. 15219
3114 North Sherman Blvd.
Milwaukee, Wisconsin
Delta Project No. AMG0-27M

MW-101

Ground Elevation:		**Well Depth:**	**13.85**	**Well Diameter:**	**2 Inch**
		Screened Interval:	**3.85 - 13.85**	**WI Unique Well #:**	**PL294**
Date	**TOC Elevation**	**Depth to Water (Below TOC)**	**Groundwater Elevation**	**Elevation Difference**	**Physical Observations**
09/25/03	NS	3.04	NS	NA	Well developed/bailed dry
10/01/03	NS	3.00	NS	NA	dry @ 5 gal (2.8 well volumes)
12/30/03	NS	2.20	NS	NA	

Notes:
NA = Not Applicable
NS = Not Surveyed
TOC = Top of Casing
All values reported in feet unless otherwise indicated

Table 1
Groundwater Elevation Summary - Historic Monitoring Wells
Amoco Service Station No. 15219
3114 North Sherman Blvd.
Milwaukee, WI
Delta Project No. 32349

MW-1

TOC elevation:	**694.32**	**Total Depth:**	**19.98**
Ground elevation:	**NM**	**Screen Length:**	**15.00**

Date	Depth to Water (ft BTOC)	Ground Water Elevation	Elevation Difference	Comments	Recorded by
10/21/94	4.08	690.24	Not Applicable		Ecova
01/09/95	4.42	689.90	-0.34		Ecova
04/20/95	3.16	691.16	1.26		Ecova
12/01/95	1.73	692.59	1.43		Delta
03/07/96	4.14	690.18	-2.41		Delta
06/25/96	3.82	690.50	0.32		Delta
10/29/96	3.89	690.43	-0.07		Delta
05/06/97	3.84	690.48	0.05		Delta
03/18/98	3.28	691.04	0.56		Delta
05/05/99	3.81	690.51	-0.53		Delta
06/07/00	3.58	690.74	0.23		Delta

MW-2

TOC elevation:	**694.50**	**Total Depth:**	**12.00**
Ground elevation:	**NM**	**Screen Length:**	**10.00**

Date	Depth to Water (ft BTOC)	Ground Water Elevation	Elevation Difference	Comments	Recorded by
10/21/94	2.48	692.02	Not Applicable		Ecova
01/09/95	3.71	690.79	-1.23		Ecova
04/20/95	2.94	691.56	0.77		Ecova
12/01/95	3.40	691.10	-0.46		Delta
03/07/96	2.78	691.72	0.62		Delta
06/25/96	1.76	692.74	1.02		Delta
10/29/96	2.77	691.73	-1.01		Delta
05/06/97	1.66	692.84	1.11		Delta
03/18/98	2.98	691.52	-1.32		Delta
05/05/99	2.80	691.70	0.18		Delta
06/07/00	1.30	693.20	1.50		Delta

Table 1
Groundwater Elevation Summary - Historic Monitoring Wells
Amoco Service Station No. 15219
3114 North Sherman Blvd.
Milwaukee, WI
Delta Project No. 32349

MW-3

TOC elevation:	**694.18**	**Total Depth:**	**20.02**
Ground elevation:	**NM**	**Screen Length:**	**15.00**

Date	Depth to Water (ft BTOC)	Ground Water Elevation	Elevation Difference	Comments	Recorded By
10/21/94	2.01	692.17	Not Applicable		Ecova
01/09/95	3.62	690.56	-1.61		Ecova
04/20/95	2.42	691.76	1.20		Ecova
12/01/95	2.99	691.19	-0.57		Delta
03/07/96	4.23	689.95	-1.24		Delta
06/25/96	4.66	689.52	-0.43		Delta
10/29/96	2.83	691.35	1.83		Delta
05/06/97	1.77	692.41	1.06		Delta
03/18/98	1.70	692.48	0.07		Delta
05/05/99	1.55	692.63	0.15		Delta
06/07/00	1.66	692.52	-0.11		Delta

MW-4

TOC elevation:	**693.84**	**Total Depth:**	**12.93**
Ground elevation:	**NM**	**Screen Length:**	**10.00**

Date	Depth to Water (ft BTOC)	Ground Water Elevation	Elevation Difference	Comments	Recorded By
10/29/96	11.67	682.17	Not Applicable	not fully recharged	Delta
05/06/97	1.77	692.07	9.90		Delta
03/18/98	1.50	692.34	0.27		Delta
05/05/99	3.35	690.49	-1.85		Delta
06/07/00	1.97	691.87	1.38		Delta

Table 1
Groundwater Elevation Summary - Historic Monitoring Wells
Amoco Service Station No. 15219
3114 North Sherman Blvd.
Milwaukee, WI
Delta Project No. 32349

Date	Groundwater Flow Direction	Comments
01/09/95	east	
04/20/95	northwest	
12/01/95	south	
03/07/96	northeast	
06/25/96	east-northeast	
10/16/96	**MW-4 Installed**	
10/29/96	not determined	MW-4 still recharging after installation. MW-1 and MW-3 well screens submerged.
05/06/97	north	
03/18/98	northwest	
05/05/99	north	
06/07/00	north - northeast	

With the exception of two gauging dates (01/09/95 and 12/01/95) flow directions have varied from northeast to northwest, with north being the common flow component.

Notes:

All units measured in feet
(ft BTOC) = Feet below top of casing
TOC = Top of casing
Monitoring wells MW-1, MW-2, and MW-3 were professionally surveyed to USGS elevations by Land Information Services (LIS) on October 13, 1994. MW-4 was added to the survey by LIS on November 19, 1996.

P:\Projects\Amoco\WI\32349\Data

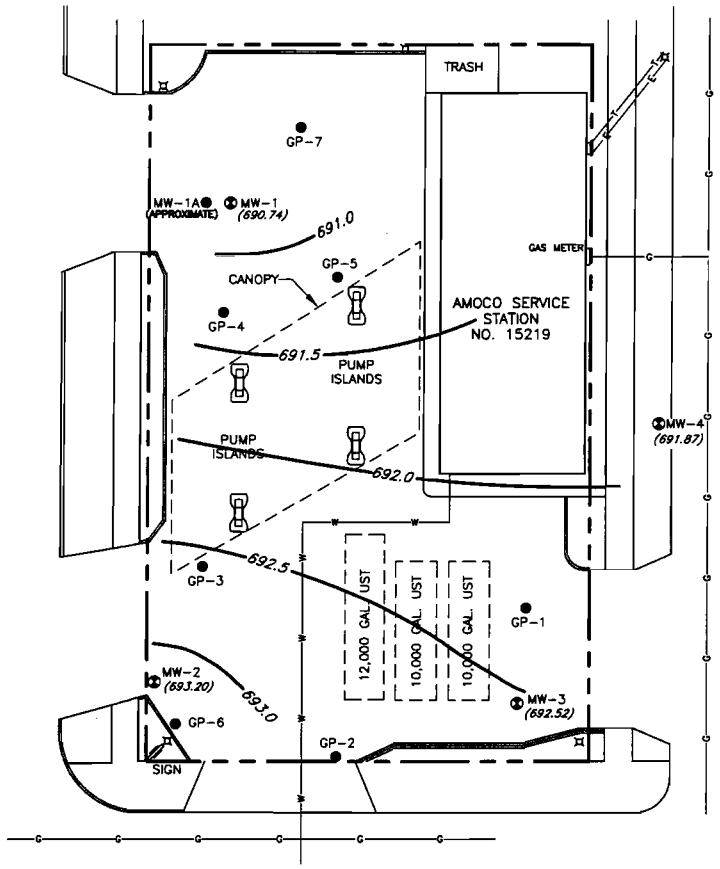

LEGEND:

- PROPERTY BOUNDARY
- APPROXIMATE MONITORING WELL LOCATION
- SOIL BORING LOCATION
- LIGHT
- G — GAS LINE
- E — ELECTRIC LINE
- T — TELEPHONE LINE
- W — WATER LINE
- (692.52) GROUNDWATER ELEVATION MEAN SEA LEVEL
- 692.5 GROUNDWATER CONTOUR LINE CONTOUR INTERVAL = 0.50 FEET

NOTE: LOCATION OF SOIL BORING MW-1A IS APPROXIMATE.

NOTE: THIS SITE WAS SURVEYED 11/19/96 BY LAND INFORMATION SERVICES.

FIGURE 4
GROUNDWATER ELEVATION CONTOUR MAP
JUNE 7, 2000
AMOCO SERVICE STATION No. 15219
3114 NORTH SHERMAN BOULEVARD
MILWAUKEE, WISCONSIN

PROJECT NO.	PREPARED BY	DRAWN BY
32349	RM	DD
DATE	REVIEWED BY	FILE NAME
06/22/00		95832-S

Delta Environmental Consultants, Inc.

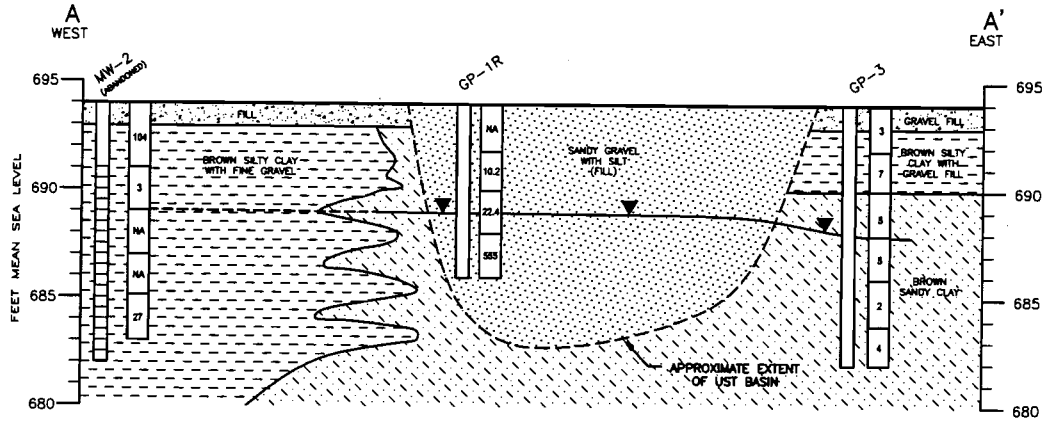

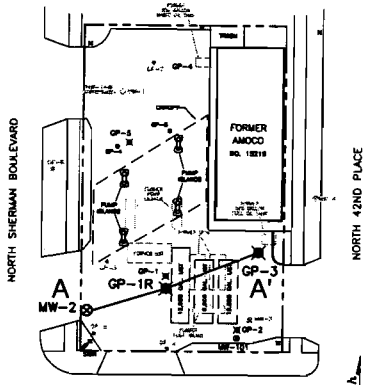

CROSS SECTION LOCATION MAP

LEGEND:

- MONITORING WELL
- MONITORING WELL SCREEN INTERVAL
- GROUND WATER TABLE ELEVATIONS SEPTEMBER 16, 2002
- SPLIT SPOON SAMPLING INTERVAL
- 3 — PHOTOIONIZATION DETECTOR READING (ppm) NA = NOT ANALYZED
- GRAVEL
- SANDY GRAVEL WITH SILT (FILL)
- BROWN SANDY CLAY
- BROWN SILTY CLAY WITH GRAVEL

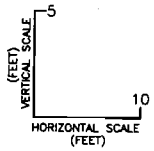

FIGURE 3
GEOLOGIC CROSS SECTION A–A'
FORMER AMOCO SERVICE STATION NO. 15219
3114 NORTH SHERMAN BOULEVARD
MILWAUKEE, WISCONSIN

PROJECT NO.	PREPARED BY	DRAWN BY
AMGO-27M	SR	DD
DATE	REVIEWED BY	FILE NAME
3/2/04		15219-AA

Delta Environmental Consultants, Inc.

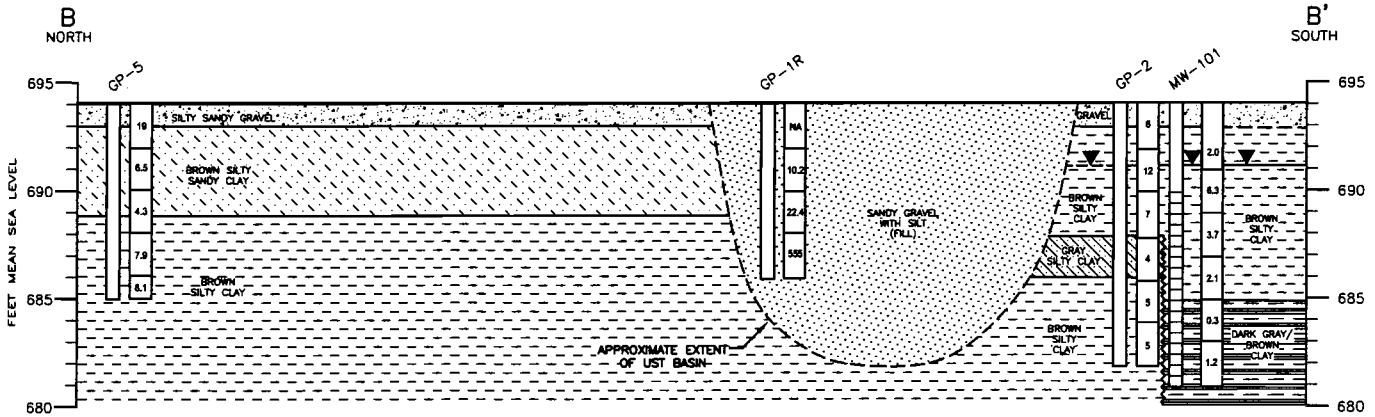

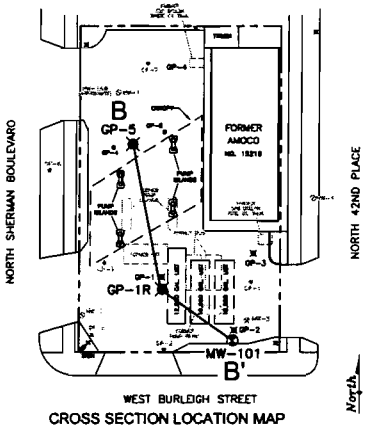

CROSS SECTION LOCATION MAP

LEGEND:

- MONITORING WELL
- MONITORING WELL SCREEN INTERVAL
- GROUND WATER TABLE ELEVATIONS SEPTEMBER 16, 2002
- SPLIT SPOON SAMPLING INTERVAL
- 7 — PHOTOIONIZATION DETECTOR READING (ppm) NA = NOT ANALYZED

- GRAVEL
- SANDY GRAVEL WITH SILT (FILL)
- BROWN SILTY SANDY CLAY
- BROWN SILTY CLAY
- GRAY SILTY CLAY
- DARK GRAY/ BROWN CLAY

VERTICAL SCALE (FEET): 5
HORIZONTAL SCALE (FEET): 10

FIGURE 4
GEOLOGIC CROSS SECTION B-B'
FORMER AMOCO SERVICE STATION NO. 15219
3114 NORTH SHERMAN BOULEVARD
MILWAUKEE, WISCONSIN

PROJECT NO.	PREPARED BY	DRAWN BY
AMGO-27M	SR	DD
DATE	REVIEWED BY	FILE NAME
3/11/04		15219-BB

Delta Environmental Consultants, Inc.

STATEMENT OF LEGAL DESCRIPTION ACCURACY

FOR

City of Milwaukee Parkland
3120 N. Sherman Boulevard
Milwaukee, WI

PIN No. 287-0559-000-3
Delta No. G027M

This statement is being provided by Delta Environmental Consultants, Inc. (Delta), on behalf of BP Products North America Inc. The enclosed property deeds, with legal descriptions, for Lots 13, 14 and the north portion of Lot 15 of the above-mentioned property were obtained from the Milwaukee County Register of Deeds Office. According to the information available to Delta, the legal descriptions are accurate and complete.

DELTA ENVIRONMENTAL CONSULTANTS, INC.

Lisa Noblet, P.G.
Project Geologist

11/15/04

Date

Delta
Environmental Consultants, Inc.

Solving environment-related business problems worldwide *www.deltaenv.com*

17500 West Liberty Lane • Suite A
New Berlin, Wisconsin 53146-2109 USA

262.789.0254 800.477.7411
Fax 262.789.5483

September 28, 2004

Certified Mail # 7004 0750 0000 2519 9706

Mr. Dave Misky
City of Milwaukee Real Estate Department
Second Floor
809 North Broadway
Milwaukee, WI 53202

Subject: **Inclusion of Property at 3120 N. Sherman Blvd on the Groundwater Geographic Information System (GIS) Registry**
Former Amoco Service Station No. 15219
3114 N. Sherman Boulevard
Milwaukee, Wisconsin
Delta Project No. AMG0-27M

Dear Mr. Misky:

Delta Environmental Consultants, Inc. (Delta) is issuing this letter to you on behalf of Atlantic Richfield Company, a BP affiliated company. BP Products North America Inc. (BP) was formerly known as Amoco Oil Company. The purpose of this letter is to notify you of our intent to list the above-mentioned property on the Wisconsin Department of Natural Resource's (WDNR's) Geographic Information System (GIS) Registry of Closed Remediation Sites. Groundwater contamination that originated on the former Amoco property referenced above appears to have migrated onto City of Milwaukee park property at 3120 N. Sherman Boulevard, Milwaukee, WI. The level of methyl tertiary butyl ether (MTBE) contamination in the groundwater on the former Amoco property is above the state groundwater enforcement standards found in chapter NR 140, Wisconsin Administrative Code. The groundwater contamination appears to have migrated onto City property based on the proximity of MTBE concentrations approximately 3 times greater than the enforcement standard at a location adjacent to, and upgradient of, the City park property. A table summarizing groundwater analytical results is enclosed. Also enclosed is a map illustrating sample locations.

Delta believes that allowing natural attenuation to complete the cleanup at this site will meet the requirements for case closure that are found in chapter NR 726 and/or NR 746, Wisconsin Administrative Code. The Wisconsin Department of Natural Resources (WDNR) has reviewed a request for case closure for the former Amoco property. As a condition of closure the WDNR has requested that the City of Milwaukee property located north of the former Amoco be placed on the GIS Registry of Closed Remediation Sites. Closure means that the WDNR will not be requiring any further investigation or cleanup action to be taken, other than the reliance on natural attenuation. A fact sheet is enclosed that explains natural attenuation.

A member of:
Inogen Environmental Alliance

Since you are not responsible for groundwater contamination that originated during BP's operation of the service station adjacent to your property, neither you nor any subsequent owner of your property will be held responsible for investigation or cleanup of this contamination, as long as you and any subsequent owners comply with the requirements of section 292.13, Wisconsin Statutes, including allowing access to your property for environmental investigation or cleanup if access is required. For further information on the requirements of section 292.13, Wisconsin Statutes, you may call 1-800-367-6076 for calls originating in Wisconsin, or 608-264-6020 if you are calling from out of state or within the Madison area, to obtain a copy of the Department of Natural Resources' publication No. RR-589, *Fact Sheet 10: Guidance for Dealing with Properties Affected by Off-Site Contamination.*

As an affected property owner, you have a right to contact the WDNR within 30 days to provide any technical information that you may have that indicates that your property should not be listed on the GIS registry. If you would like to submit any information to the WDNR that is relevant to the closure request, you should mail that information to:

Ms. Victoria Stovall
Wisconsin Department of Natural Resources
2300 North Dr. Martin Luther King, Jr. Drive
Milwaukee, Wisconsin 53212

If this case is closed, all properties within the site boundaries where groundwater contamination exceeds chapter NR 140 groundwater enforcement standards will be listed on the WDNR's GIS Registry of Closed Remediation Sites. The information on the GIS Registry includes maps showing the location of properties in Wisconsin where groundwater contamination above chapter NR 140 enforcement standards was found at the time that the case was closed. This GIS Registry will be available to the general public on the Department of Natural Resources' internet web site. **Please review the enclosed legal description of your property, and notify me within the next 30 days if the legal description is incorrect.**

Should you or any subsequent property owner wish to construct or reconstruct a well on your property, special well construction standards may be necessary to protect the well from the residual groundwater contamination. Any well driller who proposes to construct a well on your property in the future will first need to call the Diggers Hotline (1-800-242-8511) if your property is located outside of the service area of a municipally owned water system, or contact the Drinking Water program within the Department of Natural Resources if your property is located within the designated service area of a municipally owned water system, to determine if there is a need for special well construction standards.

Once the Department makes a final decision on the request for case closure, it will be documented in a final case closure letter. You may obtain a copy of this letter by requesting a copy from me, by writing to the agency address given above, or by accessing the WDNR GIS Registry of Closed Remediation Sites on the internet at www.dnr.state.wi.us/org/at/et/geo/gwur. A copy of the final closure letter is included as part of the site file on the GIS Registry of Closed Remediation Sites.

If you need more information, you may contact me at (262) 827-5542 or you may contact Binyoti Amungwafor with the WDNR at (414) 263-8607.

Sincerely,

DELTA ENVIRONMENTAL CONSULTANTS, INC.

Adam S. McIlheran
Staff Hydrogeologist

Enclosures

cc: Ray Stoelting
Atlantic Richfield Company (A BP affiliated Company)
P.O. Box 642
Chanhassen, MN 55317-9998
(952) 975-3817

PROPERTY ASSESSMENT RESULTS

TAX ACCOUNT BALANCE

GENERAL INFORMATION

ADDRESS	3120 THRU 3120ADJ N SHERMAN BL
TAXKEY	287-0559-000-3
OWNER	CITY OF MILWAUKEE %CITY REAL ESTATE
OWNER ADDRESS	809 NORTH BROADWAY MILWAUKEE, WI 532020000

ASSESSMENT

	2004	2003
LAND	$0	$0
IMPROVEMENTS	$0	$0
TOTAL	$0	$0
CURRENT CLASS	EXEMPT	

Assessments reflect the estimated value on January 1st .of the indicated year.

OTHER PROPERTY INFORMATION

- LAST CONVEYANCE:
  - DATE: 00/00
  - TRANSFER FEE: $0.00 (CLICK HERE FOR FEE EXPLANATION)
- STORIES: 0.0
- RESIDENTIAL BUILDING STYLE:
- EXTERIOR WALL TYPE:
- YEAR BUILT: 0000
- DWELLING UNITS: 1 (CLICK HERE FOR DWELLING UNITS EXPLANATION)
- TOTAL SQUARE FEET FLOOR AREA: 0
  - FIRST FLOOR AREA:
  - SECOND FLOOR AREA:
  - THIRD FLOOR AREA:
  - FINISHED ATTIC AREA:
  - FINISHED HALF STORY AREA:
  - BASEMENT LIVING AREA:
- ROOM-COUNTS
  - TOTAL ROOMS: 0
  - BEDROOMS: 0
  - BATHS: 0
  - HALF BATHS: 0
- CENTRAL AIR CONDITIONING: NO

- BASEMENT: NONE
- FIRE PLACE:
- GARAGE TYPE: NONE
- LOT SIZE: 0
- PLAT PAGE: 28735
- ZONING: PK (CLICK HERE FOR ZONING EXPLANATION)
  (For zoning information contact Milwaukee Development Center at 286-8211.)
- ASSESSMENT NEIGHBORHOOD 6242
- ALDERMANIC DISTRICT: 7
- CENSUS TRACT: 48
- LEGAL DESCRIPTION:
  LEGALS CONTINUATION OF FOND DU LAC AVENUE PARK SW 1/4 SEC 12-7-21 DESCRIPTION BLOCK 9 (LOTS 1 TO 14 INCL-N 10' LOT 15 & LOT 1 BLK 12 BONNY PARK ADJ) EXC W 27' ← PROPERTY DESCRIPTION

For more information contact the Assessor's office at 414-286-3651

© 2004 The City of Milwaukee. All rights reserved.