State of Wisconsin
Department of Natural Resources
P.O. Box 7921, Madison, WI 53707-7921

**GIS REGISTRY (Cover Sheet)**
Form 4400-280 (R 6/13)

# Source Property Information

CLOSURE DATE: 09/15/2014

**BRRTS #:** **02-57-561745**

FID #: 157005530

ACTIVITY NAME: BAAP PARCEL H

DATCP #: NA

PROPERTY ADDRESS: S7560 STH 12

PECFA#: NA

MUNICIPALITY: NORTH FREEDOM

PARCEL ID #: H

***WTM COORDINATES:**

X: **540468** Y: **319591**

** Coordinates are in WTM83, NAD83 (1991)*

**WTM COORDINATES REPRESENT:**

○ Approximate Center Of Contaminant Source

◉ Approximate Source Parcel Center

**Please check as appropriate:** (BRRTS Action Code)

## CONTINUING OBLIGATIONS

### Contaminated Media for Residual Contamination:

☐ Groundwater Contamination > ES *(236)*

- ☐ Contamination in ROW
- ☐ Off-Source Contamination

*(**note:** for list of off-source properties see "Impacted Off-Source Property Information, Form 4400-246" )*

☒ Soil Contamination > *RCL or **SSRCL *(232)*

- ☐ Contamination in ROW
- ☐ Off-Source Contamination

*(**note:** for list of off-source properties see "Impacted Off-Source Property Information, Form 4400-246" )*

### Site Specific Obligations:

☐ Soil: maintain industrial zoning *(220)*

*(**note:** soil contamination concentrations between non-industrial and industrial levels)*

☐ Structural Impediment *(224)*

☐ Site Specific Condition *(228)*

☒ Cover or Barrier *(222)*

- ☐ Direct Contact
- ☐ Soil to GW Pathway

☐ Vapor Mitigation *(226)*

☐ Maintain Liability Exemption *(230)*

*(**note:** local government unit or economic development corporation was directed to take a response action )*

### Monitoring Wells:

Select MWs will remain in use as they may be used as part of BAAPs on-going groundwater monitoring program. See Attachment E

Are all monitoring wells properly abandoned per NR 141? *(234)*

○ Yes ◉ No ○ N/A

** Residual Contaminant Level*
***Site Specific Residual Contaminant Level*

**State of Wisconsin**
**DEPARTMENT OF NATURAL RESOURCES**
**3911 Fish Hatchery Road**
**Fitchburg WI 53711-5397**

**Scott Walker, Governor**
**Cathy Stepp, Secretary**
Telephone 608-266-2621
Toll Free 1-888-936-7463
TTY Access via relay - 711

September 15, 2014

Ms. Joan Kenney – Commander's Representative
Badger Army Ammunition Plant
S7560 Highway 12
North Freedom, WI 53951

**KEEP THIS DOCUMENT WITH YOUR PROPERTY RECORDS**

SUBJECT: Final Case Closure with Continuing Obligations
Badger Army Ammunition Plant Parcel H, S7560 Highway 12, North Freedom, WI; Sauk County
DNR BRRTS Activity #: 02-57-561745

Dear Ms. Kenney:

The Department of Natural Resources (DNR) considers the Parcel H case closed, with two continuing obligations. No further investigation or remediation is required at this time. However, you and future property owners, and occupants must comply with the continuing obligations as explained in the conditions of closure in this letter. Please read over this letter closely to ensure that the Army complies with all conditions and other on-going requirements. Provide this letter to anyone who purchases, rents or leases this property from you.

This closure decision includes the following: closure for the Decon Oven area that was investigated and remediated; no further action for the Incinerator Building area that was investigated but needed no remediation; and a determination of no-action-required for the remaining area of Parcel H, including the Burning Grounds Control House, at which no releases are thought to have taken place. This closure decision does not include the following areas in Parcel H: three areas that have been previously reviewed and closed or similarly addressed by WDNR (the Racetrack/Hazardous Waste Thermal Treatment Unit (HWTTU) and Waste Piles, the 1949 Waste Pit, and Landfill #1); and the Waste Pits/Contaminated Waste Area/Propellant Burning Ground that will be addressed in the future.

This final closure decision is based on the correspondence and data provided, and is issued under chs. NR 726 and 727, Wisconsin Administrative Code. The South Central Region (SCR) Closure Committee reviewed the request for closure on September 4, 2014. This committee reviewed this environmental remediation case for compliance with state laws and standards to maintain consistency in the closure of these cases.

Only shallow soil was contaminated above remediation standards in this parcel, and only in the vicinity of the Decon Oven. The contaminants were PCB-1254 and PCB-1260, and this location was remediated by excavation. The conditions of closure and continuing obligations required were based on the assumption that the Parcel H property will be used for residential purposes, although this is in actuality not possible. The USDA, future owner of this parcel and an approximate 2,000 acres that is contiguous with this parcel, will be using this parcel for either agricultural purposes or agricultural activities support.

Thirty-nine monitoring wells are located on Parcel H and were installed to primarily monitor the Propellant Burning Ground, which is also located in this parcel. These wells will remain for current and future monitoring of

groundwater for contaminants from these other areas. These wells remain the responsibility of the Army until they are properly abandoned after DNR approval.

## Continuing Obligations

The continuing obligations for this site are summarized below. Further details on actions required are found in the Closure Conditions section below.

- Residual soil contamination may exist that would have to be properly managed should it be excavated or removed.
- One or more monitoring wells were approved to be kept for further monitoring of other source areas. Annual inspections are required and the wells must be properly filled and sealed when monitoring has been completed.

The DNR fact sheet, "Continuing Obligations for Environmental Protection", RR-819, helps to explain a property owner's responsibility for continuing obligations on their property. The fact sheet may be obtained at http://dnr.wi.gov/files/PDF/pubs/rr/RR819.pdf.

## GIS Registry

This site will be included on the Bureau for Remediation and Redevelopment Tracking System (BRRTS on the Web) at http://dnr.wi.gov/topic/Brownfields/rrsm.html, to provide public notice of a continuing obligation. The site can also be viewed on the Remediation and Redevelopment Sites Map (RRSM), a map view, under the Geographic Information System (GIS) Registry layer, at the same web address.

DNR approval prior to well construction or reconstruction is required for all sites shown on the GIS Registry, in accordance with s. NR 812.09 (4) (w), Wis. Adm. Code. This requirement applies to private drinking water wells and high capacity wells. To obtain approval, complete and submit Form 3300-254 to the DNR Drinking and Groundwater program's regional water supply specialist. This form can be obtained on-line at http://dnr.wi.gov/topic/wells/documents/3300254.pdf.

All site information is also on file at the SCR DNR office at 3911 Fish Hatchery Road, Fitchburg, WI. This letter and information that was submitted with your closure request application can be found as a Portable Document Format (PDF) in BRRTS on the Web.

## Closure Conditions

Compliance with the requirements of this letter is a responsibility to which the Army and any subsequent property owners must adhere. If these requirements are not followed, the DNR may take enforcement action under s. 292.11, Wisconsin Statutes, to ensure compliance with the specified requirements, limitations or other conditions related to the property.

Please send written notifications and inspection reports in accordance with the following requirements to:

Department of Natural Resources
Attn: Remediation and Redevelopment Program Environmental Program Associate
3911 Fish Hatchery Road
Fitchburg, WI 53711

Residual Soil Contamination (ch. NR 718, or ch. 289, Stats.; chs. 500 to 536, Wis. Adm. Code)

All current and future owners and occupants of the property need to be aware that excavation of any contaminated soil may pose an inhalation or other direct contact hazard and as a result special precautions may need to be taken to prevent a direct contact health threat to humans.

Continued Monitoring Approved

Your request for continued monitoring of the thirty-nine monitoring wells located in Parcel H is approved. These wells, used primarily to monitor the Propellant Burning Ground, are shown on Figure B.3.d, which is included in the closure request submittal received by the Department on August 20, 2014. In the future, sampling results must be submitted to the DNR within 30 days of receipt of the results. An annual inspection of these wells is required to verify the integrity of the monitoring well construction, starting one year after the date of this letter. The inspection log shall be maintained on site, and be made available to the DNR upon request.

You may be held liable for any problems associated with the monitoring wells if they create a conduit for contaminants to enter groundwater. Once monitoring of these wells ends, the Army or its agent is required to notify the DNR, to properly fill and seal each well, and to submit the required documentation to the DNR.

In Closing

Please be aware that the case may be reopened pursuant to s. NR 727.13, Wis. Adm. Code, for any of the following situations:

- if additional information regarding site conditions indicates that contamination on or from the site poses a threat to public health, safety, or welfare or to the environment;
- if the property owner does not comply with the conditions of closure, with any deed restrictions applied to the property, or with a certificate of completion issued under s. 292.15, Wis. Stats; or
- if a property owner fails to maintain or comply with a continuing obligation (imposed under this closure approval letter).

The DNR appreciates your efforts to restore the environment at this site. If you have any questions regarding this closure decision or anything outlined in this letter, please contact Hank Kuehling at 608.275.3286 or at Harlan.Kuehling@wisconsin.gov.

Sincerely,

Linda Hanefeld, Team Supervisor
SCR Remediation & Redevelopment Program

Attachment: Figure B.3.d – Groundwater Monitoring Well Location Map, Parcel H

c (via e-mail): Mike Sitton – U.S. Army
Laura Olah - CSWAB

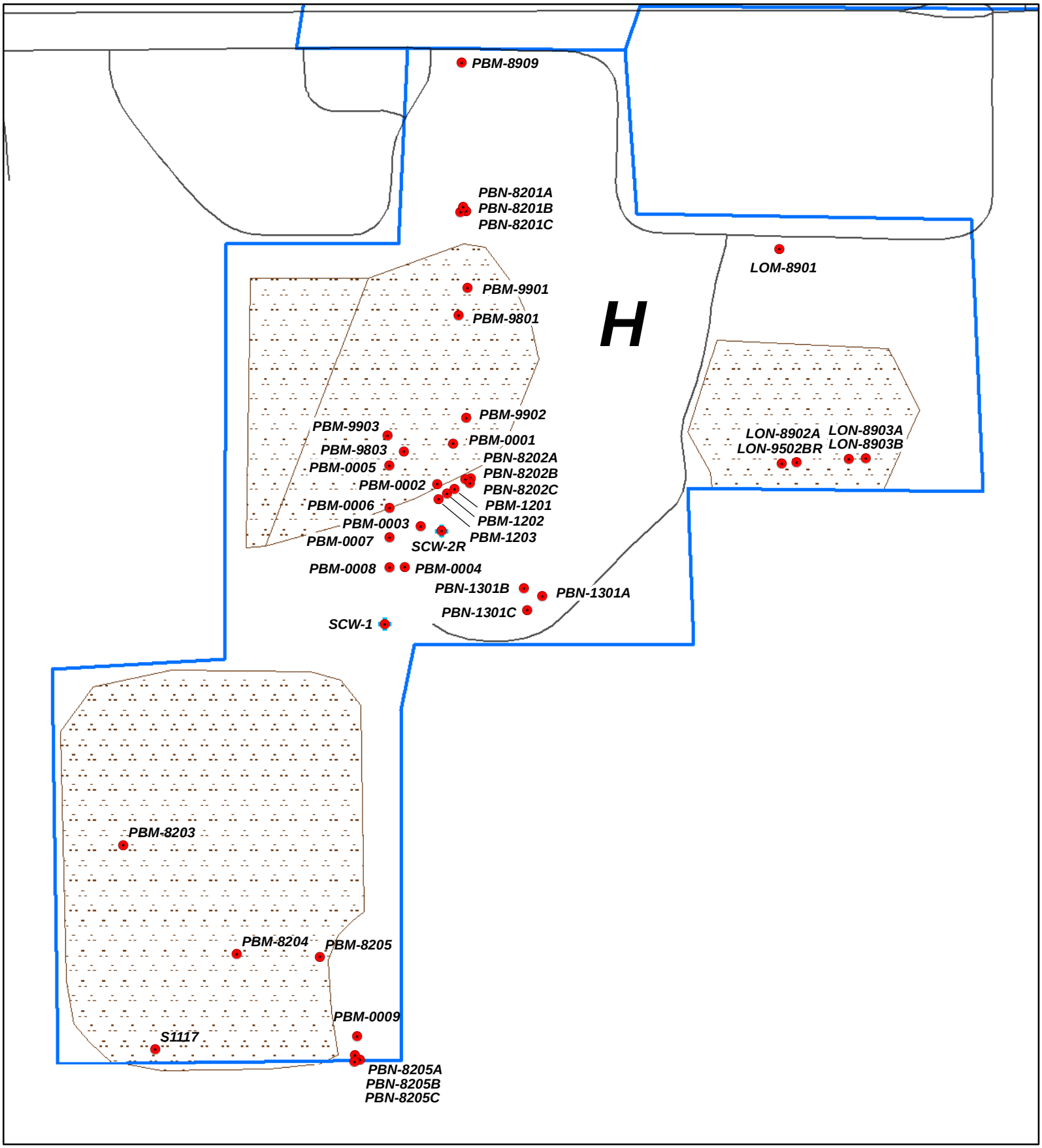


**Legend**

- Monitoring Well
- Extraction Well
- Waste Disposal Areas
- Parcel Boundary
- Road

Figure B.3.d

Monitoring and Extraction Well Location Map
Parcel H - Wisconsin Department of Natural Resources
Closure Report
Badger Army Ammunition Plant

1 inch = 260 feet

0 400 800 Feet

D:\GIS_Projects\WDNR Closure Request\H\GIS Registry\Figure B3d Monitoring We

State of Wisconsin
Department of Natural Resources
PO Box 7921, Madison WI 53707-7921
dnr.wi.gov

# Case Closure - GIS Registry



## SUBMIT AS UNBOUND PACKAGE IN THE ORDER SHOWN

**Notice:** Pursuant to ch. 292, Wis. Stats., and chs. NR 726 and 746, Wis. Adm. Code, this form is required to be completed for case closure requests. The closure of a case means that the Department of Natural Resources (DNR) has determined that no further response is required at that time based on the information that has been submitted to the DNR. All sections of this form must be completed unless otherwise directed by the Department. Incomplete forms will be considered "administratively incomplete" and processing of the request will stop until required information is provided. Any section of the form not relevant to the case closure request must be fully filled out or explained on a separate page and attached to the relevant section of this form. DNR will consider your request administratively complete when the form and all sections are completed, all attachments are included, and the applicable fees required under ch. NR 749, Wis. Adm. Code, are included, and sent to the proper destinations. Personal information collected will be used for administrative purposes and may be provided to requesters to the extent required by Wisconsin's Open Records Law (ss. 19.31 - 19.39, Wis. Stats.).

### Site Information

| | | | |
|---|---|---|---|
| BRRTS No. | Parcel ID No.<br>H | | |
| BRRTS Activity (Site) Name<br>BAAP Parcel H | WTM Coordinates<br>X 540,622 | Y 319,934 | |
| Street Address<br>S7560 U.S. Highway 12 | City<br>North Freedom | State<br>WI | ZIP Code<br>53951 |

Responsible Party (RP) Name
United States Army

Company Name

| | | | |
|---|---|---|---|
| Street Address<br>S7560 U.S. Highway 12 | City<br>North Freedom | State<br>WI | ZIP Code<br>53951 |
| Phone Number<br>(608) 643-3361 | Email<br>joan.m.kenney.civ@mail.mil | | |

☒ Check here if the RP is the owner of the source property.

Environmental Consultant Name
Clair Ruenger

Consulting Firm
Badger Technical Services, LLC - BAAP

| | | | |
|---|---|---|---|
| Street Address<br>S7560 U.S. Highway 12 | City<br>North Freedom | State<br>WI | ZIP Code<br>53951 |
| Phone Number<br>(608) 643-3361 | Email<br>clair.ruenger@specpro-inc.com | | |
| Acres Ready For Use<br>44.6 | Voluntary Party Liability Exemption Site? ○ Yes ◉ No | | |

### Fees and Mailing of Closure Request

*If any section is not relevant to the case closure request, you must fully explain the reasons why and attach that explanation to the relevant section of the form. All information submitted shall be legible. Providing illegible information may result in a submittal being considered incomplete until corrected.*

1. **Send a copy of page one** of this form and the applicable ch. NR 749, Wis. Adm. Code, fee(s) to the DNR regional Environmental Program Associate at **http://dnr.wi.gov/topic/Brownfields/Contact.html**. Check all fees that apply:

   ☐ $1,050 Closure Fee

   ☐ $300 Database Fee for Soil

   ☐ $350 Database Fee for Groundwater or Other Condition (MW Not Abandoned)

   Total Amount of Payment $ _____

2. **Send one paper copy and one e-copy on compact disk of the entire closure package** to the Regional Project Manager assigned to your site. Submit as *unbound, separate documents* in the order and with the titles prescribed by this form. For electronic document submittal requirements, see **http://dnr.wi.gov/files/PDF/pubs/rr/RR690.pdf.**

## Site Summary

*If any section is not relevant to the case closure request, you must fully explain the reasons why and attach that explanation to the relevant section of the form. All information submitted shall be legible. Providing illegible information may result in a submittal being considered incomplete until corrected.*

### 1. General Site Information and Site History

A. **Site Location**: Describe the physical location of the site, both generally and specific to its immediate surroundings.
Located in the west-central portion of BAAP, Parcel H is open prairie grassland and is surrounded by same.

B. **Prior and current site usage**: Specifically describe the current and historic occupancy and types of use.
This area of BAAP known as the Propellant Burning Grounds (PBG) was used for the disposal and burning of propellants and other waste materials. A cap and cover are in place in three former waste disposal areas: Landfill # 1, the Racetrack/ Hazardous Waste Thermal Treatment Unit and the 1949 Refuse Pit Area/Contaminated Waste Area. The Contaminated Waste Area is not part of this closure request. A separate closure request will be submitted for this area. One of the parcel structures was the Decontamination (Decon) Oven, where scrap metal was thermally decontaminated prior to removal off-site. The other structure on the parcel was the incinerator building where classified documents were managed from 1941 to 1945. The only remaining structure on the parcel housed the control components for the Decon Oven operation. This parcel is scheduled to be transferred to USDA.

C. Describe how and when site contamination was discovered.
In 1981 soil samples contained high concentrations of both organic and inorganic compounds including diethylpthalate (DEP), di-n-butylphthalate (DBP), dinitrotoluene (DNT), diphenylamine, nitrodiphenylamine, lead and tin.

D. Describe the type(s) and source(s) or suspected source(s) of contamination.
This area of BAAP was used for the disposal and burning of propellants and other waste materials. A cap and cover are in place in three former waste disposal areas: Landfill # 1, the Racetrack/Hazardous Waste Thermal Treatment Unit and the 1949 Refuse Pit Area/Contaminated Waste Area. The Contaminated Waste Area is not part of this Case Closure Request. A separate Case Closure Request will be submitted for this area. One of the parcel structures was the Decontamination (Decon) Oven, where scrap metal was thermally decontaminated prior to removal off-site.

E. Other relevant site description information (or enter Not Applicable).
Not applicable.

F. List BRRTS activity site name and number for all other BRRTS activities at this property, including closed cases.
BAAP 1949 Pit (0257549746 and 0257526298) and PBG Refuse Pits (0257549747).

G. List BRRTS activity/site name(s) and number(s) for all properties immediately adjacent to this site, and those impacted by contamination from this site.
Not applicable.

H. **Current zoning** (e.g. industrial, commercial, residential) for the site and for neighboring properties, and how verified (Provide documentation in Attachment G).
The site is zoned "governmental-agricultural conservation".

### 2. General Site Conditions

A. Soil/Geology

i. Describe soil type(s) and relevant physical properties, thickness of soil column across the site, vertical and lateral variations in soil types.
Soil - medium brown silty sands, sandy silts, and sandy clay. Geology - unconsolidated glacial sediments consisting of outwash sands interlayered sand/gravel, with some interbedded till underlain by sandstone bedrock at 280 feet.

ii. Describe the composition, location and lateral extent, and depth of fill or waste deposits on the site.
Approximately 19,500 cubic yards of ash, slag, asphalt, concrete, wood and other metallic and nonmetallic waste are contained in Landfill #1. An estimated 58,000 cubic yards of construction debris are contained in the 1949 Pit. See Figure 2 in the 2014 BTS Parcel H - WDNR Closure Report for lateral extent of waste areas. Depth of waste material was approximately 15 feet below grade.

iii. Depth to bedrock, bedrock type, and whether or not it was encountered during the investigation.
280 feet to Cambrian sandstone, not encountered during investigations/remediation.

iv. Describe the nature and locations of current surface cover(s) across the site (e.g. natural vegetation, landscaped areas, gravel, hard surfaces, and buildings).
Natural vegetation.

B. Groundwater

i. **Discuss depth to groundwater and piezometric elevations**. Describe and explain depth variations, and whether free product affects measurement or water table elevation. Describe the stratigraphic unit(s) where water table was found or which were measured for piezometric levels.

There are 39 monitoring wells and two extraction wells within Parcel H. These wells are screened within the unconsolidated sand/gravel. The groundwater elevation was 772.21 above mean sea level at PBM-1202 on date April 15, 2014.

ii. Discuss groundwater flow direction(s), shallow and deep. Describe and explain flow variations, including fracture flow if present.

Groundwater flow direction is to the south.

iii. Discuss groundwater flow characteristics: hydraulic conductivity, flow rate and permeability, or state why this information was not obtained.

The average flow velocity and hydraulic conductivity at BAAP are 0.72 ft/day and 4x10E-2 cm/sec, respectively.

iv. Identify and describe locations/distance of potable and/or municipal Wells within 1200 feet of the site.

There are no potable or municipal wells within 1,200 feet of the parcel.

**3. Site Investigation Summary**

A. General

i. Provide a brief summary of the site investigation history. Reference previous submittals by name and date. Describe site investigation activities undertaken since the last submittal for this project and attach the appropriate documentation in Attachment C, if not previously provided.

The site investigation history of Parcel H began in 1979 and has been the subject of many subsequent investigations. A brief summary of these investigations and relevant references are included in Attachment 3.A.i.

ii. Identify whether contamination extends beyond the source property boundary, describe the off-site media (e.g., soil, groundwater, etc.) impacted, and the vertical and horizontal extent of off-site impacts.

Soil contamination extends vertically from the base of the former waste pits (20+ feet) to groundwater (150 feet). Groundwater has been impacted by contamination; however, caps are preventing soil contamination from contributing to plume. The source of the groundwater contamination in Parcel H is the PBG area; however, closure of the PBG groundwater plume is not part of this Parcel H closure request.

iii. Identify any structural impediments to the completion of site investigation and/or remediation and whether these impediments are on the source property or off the source property. Identify the type and location of any structural impediment (e.g., structure) that also serves as the performance standard barrier for protection of the direct contact or the groundwater pathway.

Structural impediments were not encountered during the investigation activities. Structural impediments were removed during final stages of remediation activities. These structural impediments consisted of buildings used for previous remediation activities, thermal decontamination and document management. Final cover systems serve as protection for direct contact and reduce percolation of surface water.

B. Soil

i. Describe degree and extent of **soil contamination** at and from this site. Relate this to known or suspected sources and known or potential receptors/migration pathways.

See the 2014 BTS Parcel H - WDNR Case Closure Report, pgs 1 - 5.

ii. Describe the level and types of **soil contaminants** found in the upper four feet of the soil column.

Contaminated soil within the upper four feet has been removed.

iii. Identify the ch. NR 720, Wis. Adm. Code, method used to establish the soil cleanup standards for this site. This includes a soil performance standard established in accordance with s. NR 720.08, a Residual Contaminant Level (RCL) established in accordance with s. NR 720.10 that is protective of groundwater quality, or an RCL established in accordance with s. NR 720.12 that is protective of human health from direct contact with contaminated soil. Identify the land use classification that was used to establish cleanup standards. Provide a copy of the supporting calculations/ information in Attachment C.

Soil cleanup objectives are presented in Table 1 of the 2014 BTS Parcel H - WDNR Case Closure Report.

C. Groundwater

i. Describe degree and extent of groundwater contamination at or from this site. Relate this to known or suspected sources and known or potential receptors/migration pathways. Specifically address any potential or existing impacts to water supply wells or interception with building foundation drain systems.

The source of the groundwater contamination in Parcel H is the PBG area. Closure of the PBG groundwater plume is not part of this Parcel H closure request.

ii. Describe the presence of free product at the site, including the thickness, depth, and locations.
Not applicable.

D. Vapor

i. Describe how the vapor migration pathway was assessed, including locations where vapor or indoor air samples were collected. If the vapor pathway was not assessed, explain reasons why.
The vapor pathway evaluation is associated with PGB groundwater plume. Closure of the PBG groundwater plume is not part of this Parcel H closure request.

ii. Identify the applicable DNR action levels and the land use classification used to establish them. Describe where the DNR action levels were reached or exceeded (e.g., sub slab, indoor air or both).
The vapor pathway evaluation is associated with PGB groundwater plume. Closure of the PBG groundwater plume is not part of this Parcel H closure request.

E. Surface Water and Sediment

i. Identify whether surface water and/or sediment was assessed and describe the impacts found. If this pathway was not assessed, explain why.
No surface water is present in the parcel.

ii. Identify any surface water and/or sediment action levels used to assess the impacts for this pathway and how these were derived. Describe where the DNR action levels were reached or exceeded.
Not applicable.

**4. Remedial Actions Implemented and Residual Levels at Closure**

A. General: Provide a brief summary of the remedial action history. List previous remedial action report submittals by name and date. Identify remedial actions undertaken since the last submittal for this project and provide the appropriate documentation in Attachment C.
The remedial actions in Parcel H have included excavation and incineration and final cover system construction. These remedial actions are described in the 2014 BTS Parcel H - WDNR Closure Report, pgs 1 - 5.

B. Describe any immediate or interim actions taken at the site under ch NR 708, Wis. Adm. Code.
The remedial actions in Parcel H have included excavation and incineration and treat and final cover system construction. These remedial actions are described in the 2014 BTS Parcel H - WDNR Closure Report, pgs 1 - 5.

C. Describe the *active* remedial actions taken at the site, including: type of remedial system(s) used for each media impacted; the size and location of any excavation or in-situ treatment; the effectiveness of the systems to address the contaminated media and substances; operational history of the systems; and summarize the performance of the active remedial actions. Provide any system performance documentation in Attachment A.7.
Parcel H has three final cover systems in place. These systems are described in the 2014 BTS Parcel H - WDNR Closure Report, pgs 1 - 5.

D. Provide a discussion of the nature, degree and extent of residual contamination that will remain at the site or on off-site affected properties after case closure.
Waste will remain under final cover systems at the 1949 Pit and Landfill 1. See the 2014 BTS Parcel H - WDNR Case Closure Report, pgs 1 - 5.

E. Describe the remaining soil contamination within four feet of ground surface (direct contact zone) that attains or exceeds Residual Contaminant Levels established under s. NR 720. 12 , the ch. NR720, Wis. Adm. Code, for protection of human health from direct contact.
All direct contact zone soil that exceeded a remedial objective has been removed or is covered by a final cover system with a depth greater than four feet.

F. Describe the remaining soil contamination in the vadose zone that attains or exceeds the soil standard(s) for the groundwater pathway.
Based on soil concentrations in 2005, approximately 3,841 pounds of DNT remains in the vadose zone soil underneath the RCRA cap. See the 2014 BTS Parcel H - WDNR Case Closure Report for further information.

G. Describe how the residual contamination will be addressed, including but not limited to details concerning: covers, engineering controls or other barrier features; use of natural attenuation of groundwater; and vapor mitigation systems or measures.
Contaminants are immobilized underneath the final cover systems. Closure of the PBG groundwater plume is not part of this Parcel H closure request.

H. If using natural attenuation as a groundwater remedy, describe how the data collected supports the conclusion that natural attenuation is effective in reducing contaminant mass and concentration, (e.g. stable or receding groundwater plume).
Closure of the PBG groundwater plume is not part of this Parcel H closure request.

I. Identify how all exposure pathways were removed and/or adequately addressed by immediate and/or remedial action(s) described above in paragraphs, B, C, D, E and F.

Source removal (soil excavation) of impacted soil prevents direct contact and capping the remaining impacted soil limits potential migration of residual contaminants to groundwater.

J. Identify any system hardware anticipated to be left in place after site closure, and explain the reasons why it will remain.

Monitoring and extraction wells will remain as part of the site-wide groundwater monitoring network. On July 8, 2014, the WDNR approved the request to dismantle the IRM groundwater treatment system. Dismantling procedures for this facility have commenced. The MIRM groundwater treatment systems will remain on-site until the WDNR determines that it can be dismantled and demolition can be completed. Landfill #1 and the 1949 Waste Pit/Contaminated Waste Area final cover systems contain gas venting and perimeter toe drain pipes that will remain for operations of the final cover system and maintenance. The Contaminated Waste Area is not part of this Case Closure Request. A separate Case Closure Request will be submitted for this area.

K. Identify the need for a ch. NR 140, Wis. Adm. Code, groundwater Preventive Action Limit (PAL) or Enforcement Standard (ES) exemption, and identify the affected monitoring points and applicable substances.

Not applicable. A site-wide groundwater program has been implemented and incorporates this parcel.

L. If a DNR action level for vapor intrusion was exceeded (for indoor air, sub slab, or both) describe where it was exceeded and how the pathway was addressed.

The vapor pathway evaluation is associated with PGB groundwater plume. Closure of the PBG groundwater plume is not part of this Parcel H closure request.

M. Describe the surface water and/or sediment contaminant concentrations and areas after remediation. If a DNR action level was exceeded, describe where it was exceeded and how the pathway was addressed.

Not applicable.

**5. Continuing Obligations: Situations where a maintenance plan(s) and inclusion on DNR's GIS Registry are required.**

Directions: Check all that apply to this case closure request:

| | This scenario Applies to this Case Closure | | Case Closure Scenario: Maintenance Plans and GIS Registry | Maintenance Plan (s) Required in Attachment D | GIS Registry Listing |
|---|---|---|---|---|---|
| | A. On-Site | B. Off-Site | | | |
| i. | ☒ | ☐ | Engineering Control/Barrier for Direct Contact | ✓ | ✓ |
| ii. | ☒ | ☐ | Engineering Control/Barrier for Groundwater Infiltration | ✓ | ✓ |
| iii. | ☒ | ☐ | Vapor Mitigation - post closure passive system | ✓ | ✓ |
| iv. | ☐ | ☐ | Vapor Mitigation - post closure active system | ✓ | ✓ |
| v. | ☐ | ☒ | None of the above scenarios apply to this case closure | NA | NA |

**6. Continuing Obligations: Situations where inclusion on DNR's GIS Registry is required.**

Directions: Check all that apply to this case closure request:

| | This scenario Applies to this Case Closure | | Case Closure Scenario: GIS Registry Only | GIS Registry Listing |
|---|---|---|---|---|
| | A. On-Site | B. Off-Site | | |
| i. | ☒ | ☐ | Residual soil contamination exceeds ch. NR 720 generic or site-specific RCLs | ✓ |
| ii. | ☒ | ☒ | Sites with groundwater contamination equal to or greater than the ch. NR 140, enforcement standards (ES) | ✓ |
| iii. | ☒ | ☒ | Monitoring wells: lost, transferred or remaining in use | ✓ |
| iv. | ☐ | ☐ | Structural Impediment (not as a performance standard) | ✓ |
| v. | ☒ | ☐ | Residual soil contamination remaining at ch. NR 720 Industrial Use levels | ✓ |
| vi. | ☐ | ☐ | Vapor intrusion may be future, post-closure issue if building use or land use changes | ✓ |
| vii. | ☐ | ☐ | None of the above scenarios apply to this case closure | NA |

**7. Underground Storage Tanks**

A. Were any tanks, piping or other associated tank system components removed as part of the investigation or remedial action? ○ Yes ◉ No

B. Do any upgraded tanks meeting the requirements of ch. SPS 310, Wis. Adm. Code, exist on the property? ○ Yes ◉ No

C. If the answer to question 7b is yes, is the leak detection system currently being monitored? ○ Yes ○ No

## Data Tables (Attachment A)

*If any section is not relevant to the case closure request, you must fully explain the reasons why and attach that explanation to the relevant section of the form.All information submitted shall be legible. Providing illegible information may result in a submittal being considered incomplete until corrected.*

**General directions for Data Tables:**

- Use bold and italics font on information of importance on tables and figures. Use **bold font** for ch. NR 140, Wis. Adm. Code, groundwater enforcement standard (ES) attainments or exceedances, and *italicized font* for ch. NR 140, Wis. Adm. Code, groundwater preventive action limit (PAL) standard attainments or exceedances.
- Do not use shading or highlighting on the analytical tables.
- Include on Data Tables the level of detection for results which are below the detection level (i.e. do not just list as no detect (ND)).
- Include the units on data tables.
- Summaries of all data must include information collected by previous consultants.
- Do not submit lab data sheets unless these have not been submitted in a previous report. Tabulate all data required in s. NR 716.15 (3)(c), Wis. Adm. Code, in the format required in s. NR 716.15(4)(e), Wis. Adm. Code.
- Include in Attachment A all of the following tables, in the order prescribed below, with the specific Closure Form titles noted on the separate attachments (e.g., Title: A.1. Groundwater Analytical Table; A.2. Pre-remedial Soil Analytical Table, etc).
- For required documents, each table (e.g., A.1., A.2., etc.,) should be a separate PDF.

**A. Data Tables**

A.1. **Groundwater Analytical Table(s):** Table(s) showing the analytical results and collection dates, for all groundwater sampling points e.g. monitoring wells, temporary wells, sumps, extraction wells, any potable wells and any other wells, extraction wells and any potable wells for which samples have been collected.

A.2. **Pre-remedial Soil Analytical Table(s):** Table(s) showing the soil analytical results and collection dates - prior to conducting the interim and/or remedial action. Indicate if sample was collected above or below the all-time low water table (unsaturated verses saturated).

A.3. **Post-remedial Soil Analytical Table(s):** Table(s) showing the post-remedial action soil analytical results and collection dates. Indicate if sample was collected above or below the all-time low water table (unsaturated verses saturated).

A.4. **Pre and Post Remaining Soil Contamination Soil Analytical Table(s):** Table(s) showing only the pre and post remedial action soil analytical results that exceed a Residual Contaminate Level (RCL) or a Site-Specific Residual Level (SSRCL).

A.5. **Vapor Analytical Table**: Table(s) showing type(s) of samples, sample collection methods, analytical method, sample results, date of sample collection, time period for sample collection, method and results of leak detection, and date, method

and results of communication testing.

A.6. **Other Media of Concern (e.g., sediment or surface water)**: Table(s) showing type(s) of sample, sample collection method, analytical method, sample results, date of sample collection, time period for sample collection, method and results sampling.

A.7. **Water Level Elevations:** Table(s) showing all water level elevation measurements and dates from all monitoring wells. If present, free product should be noted on the table.

A.8. **Other:** This attachment should include: 1) any available tabulated natural attenuation data; 2) data tables pertaining to engineered remedial systems that document operational history, demonstrate system performance and effectiveness, and display emissions data; and (3) any other data tables relevant to case closure not otherwise noted above. If this section is not applicable, please explain the reasons why.

## Maps and Figures (Attachment B)

*If any section is not relevant to the case closure request, you must fully explain the reasons why and attach that explanation to the relevant section of the form. All information submitted shall be legible. Providing illegible information may result in a submittal being considered incomplete until corrected.*

**General Directions for all Maps and Figures:**

- If any map or figure is not relevant to the case closure request, you must fully explain the reason(s) why and attach that explanation (properly labeled with the map/ figure title) in Attachment B.
- Provide on paper no larger than 11 x 17 inches, unless otherwise directed by the Department. Maps and figures may be submitted in a larger electronic size than 11x17 inches, in a portable document format (pdf) readable by the Adobe Acrobat Reader. However, those larger-size documents must be legible when printed.
- Prepare visual aids, including maps, plans, drawings, fence diagrams, tables and photographs according to the applicable portions of ss. NR 716.15(4), 726.09(2) and 726.11(3), (5) and (6), Wis Adm. Code.
- Do not use shading or highlights on any of the analytical tables.
- Include all sample locations.
- Contour lines should be clearly labeled and defined.
- Include in Attachment B all of the following maps and figures, in the order prescribed below, with the specific Closure Form titles noted on the separate attachments (e.g., Title: B.1. Location Map; B.2. Detailed Site Map, etc).
- For the electronic copies that are required, each map (e.g., B.1.a., B.2.a, etc.,) should be a separate PDF.

**B.1. Location Maps**

B.1.a. **Location Map:** A map outlining all properties within the contaminated site boundaries on a U.S.G.S. topographic map or plat map in sufficient detail to permit easy location of all impacted and/or adjacent parcels. If groundwater standards are exceeded, include the location of all potable wells, including municipal wells, within 1200 feet of the area of contamination.

B.1.b. **Detailed Site Map:** A map that shows all relevant features (buildings, roads, current ground surface cover, individual property boundaries for on-site and applicable off-site properties, contaminant sources, utility lines, monitoring wells and potable wells) within the contaminated area. This map is to show the location of all contaminated public streets, and highway and railroad rights-of-way in relation to the source property and in relation to the boundaries of groundwater contamination exceeding a ch. NR 140 Enforcement Standard (ES), and/or in relation to the boundaries of soil contamination exceeding a Residual Contaminant Level (RCL) established in accordance with the provisions contained in s. NR 720.10 or s. NR 720.12, Wis. Adm. Code.

B.1.c. **RR Site Map:** From RR Sites Map (http://dnrmaps.wi.gov/sl/?Viewer=RR Sites) attach a map depicting the source property, and all open and closed BRRTS sites within a half-mile radius or less of the property.

**B.2. Soil Figures**

B.2.a. **Pre-remedial Soil Contamination:** Figure(s) showing the sample location of all pre-remedial, unsaturated contaminated soil and a single contour showing the horizontal extent of each area of contiguous residual soil contamination that exceeded a Residual Contaminant Level (RCL) established in accordance with the provisions contained in s. NR 720.10 or s. NR 720.12, Wis. Adm. Code.

B.2.b. **Post-remedial Soil Contamination :** Figure(s) showing the sample location of all post-remedial, unsaturated contaminated soil and a single contour showing the horizontal extent of each area of contiguous residual soil contamination that exceeds a Residual Contaminant Level (RCL) established in accordance with the provisions contained in s. NR 720.10 or s. NR 720.12, Wis. Adm. Code. A separate contour line should be used to indicate the extent of residual direct contact exceedances.

B.2.c. **Pre/Post Remaining Soil Contamination:** Figure(s) showing the only location of all pre and post remedial residual soil sample location(s) where unsaturated contaminated soil remains after remediation and a single contour showing the horizontal extent of each area of contiguous residual soil contamination that exceeds a Residual Contaminate Level (RCL) established in accordance with the provisions contained in s. NR 720.10 or s. NR 720.12, Wis. Adm. Code. A separate contour line should be used to indicate the extent of residual direct contact exceedances.

**B.3. Groundwater Figures**

B.3.a. **Geologic Cross-Section Figure(s):** One or more cross-section diagrams showing soil types and correlations across the site, water table and piezometric elevations, and locations and elevations of geologic rock units, if encountered.

Display on one or more figures all of the following:

- Source location(s) and vertical extent of residual soil contamination exceeding a Residual Contaminant Level (RCL) or a Site Specific Residual Contaminant Level (SSRCL).
- Source location(s) and lateral and vertical extent if groundwater contamination exceeds a ch. NR 140 Enforcement Standard (ES)
- Surface features, including buildings and basements, and show surface elevation changes.
- Any areas of active remediation within the cross section path, such as excavations or treatment zones.
- Include a map displaying the cross-section location(s), if they are not displayed on the Detailed Site Map (Map B.1b)

B.3.b. **Groundwater Isoconcentration:** Figure(s) showing the horizontal extent of the post-remedial groundwater contamination exceeding a ch. NR 140, Wis. Adm. Code, Preventive Action Limit (PAL) and/or an Enforcement Standard (ES). Indicate the date and direction of groundwater flow based on the most recent sampling data.

B.3.c. **Groundwater Flow Direction:** Figure(s) representing groundwater movement at the site. If the flow direction varies by more than 20° over the history of the site, submit two groundwater flow maps showing the maximum variation in flow direction.

B.3.d. **Monitoring Wells:** Figure(s) showing all monitoring wells, with well identification number. Clearly designate any wells that: (1) are proposed to be abandoned; (2) cannot be located; (3) are being transferred; (4) will be retained for further sampling, or (5) have been previously abandoned.

**B.4. Vapor Maps and Other Media**

B.4.a. **Vapor Intrusion Map:** Map(s) showing all locations and results for samples taken to investigate the vapor intrusion pathway, in relation to remaining soil and groundwater contamination, including sub-slab, indoor air, soil vapor, ambient air, and communication testing. Show locations and footprints of affected structures and utility corridors, and/or where residual contamination poses a future risk of vapor intrusion.

B.4.b. **Other media of concern (e.g., sediment or surface water**): Map(s) showing all sampling locations and results for other media investigation. Include the date of sample collection and identify where any standards are exceeded.

B.4.c. **Other:** Include any other relevant maps and figures not otherwise noted above. (This section may remain blank)

## Documentation of Remedial Action (Attachment C)

*If any section is not relevant to the case closure request, you must fully explain the reasons why and attach that explanation to the relevant section of the form. All information submitted shall be legible. Providing illegible information may result in a submittal being considered incomplete until corrected.*

**General Directions:**

- Include in Attachment C all of the following documentation, in the order prescribed below, with the specific Closure Form titles noted on the separate attachments (e.g., Title: C.1. Site Investigation Documentation; C.2. Investigative Waste, etc).
- If the documentation requested below is "not applicable" to the site-specific circumstances, include a brief explanation to support that conclusion.
- If the documentation requested below has already been submitted to the Department, please note the title and date of the report for that particular document requested.

C.1. **Site investigation documentation,** that has not otherwise been previously submitted.

C.2. **Investigative waste** disposal documentation.

C.3. **Provide a description of the methodology used along with all supporting documentation if the Residual Contaminant Levels are different than those contained in the Department's RCL Spreadsheet available at: http://dnr.wi.gov/topic/Brownfields/Professionals.html.**

C.4. **Construction documentation** or as-built report for any constructed remedial action or portion of, or interim action specified in s. NR 724.02(1), Wis. Adm. Code.

C.5. **Decommissioning of Remedial Systems.** Include plans to properly abandon any systems or equipment upon receiving conditional closure.

C.6. **Photos.** For sites or facilities with a cover or other performance standard, a structural impediment or a vapor mitigation system. Include one or more photographs documenting the condition and extent of the feature at the time of the closure request. Pertinent features should be visible and discernible. Photographs must be labeled with the site name, the features shown, location and the date on which the photograph was taken.

C.7. **Other**. Include any other relevant documentation not otherwise noted above. (This section may remain blank)

## Maintenance Plan(s) and Photographs (Attachment D)

*If any section is not relevant to the case closure request, you must fully explain the reasons why and attach that explanation to the relevant section of the form. All information submitted shall be legible. Providing illegible information may result in a submittal being considered incomplete until corrected.*

When one or more "maintenance plans" are required for a site closure, include in each maintenance plan all required information listed below, and attach the plan(s) in Attachment D. The following "model" maintenance plans can be located at: (1) Maintenance plan for a engineering control or cover: http://dnr.wi.gov/topic/Brownfields/documents/maintenance-plan.pdf; and (2) Maintenance plan for vapor intrusion: http://dnr.wi.gov/topic/Brownfields/documents/appendix5_606.pdf.

D.1. **Location map(s)** which show(s): (1) the feature that requires maintenance; (2) the location of the feature(s) that require(s) maintenance - on and off the source property; (3) the extent of the structure or feature(s) to be maintained, in relation to other structures or features on the site; (4) the extent and type of residual contamination; and (5) and all property boundaries.

D.2. **Brief descriptions** of the type, depth and location of residual contamination.

D.3. **Description of maintenance action(s)** required for maximizing effectiveness of the engineered control, vapor mitigation system, feature or other action for which maintenance is required.

D.4. **Inspection log**, to be maintained on site, or at a location specified in the maintenance plan or approval letter.

D.5. **Contact information,** including the name, address and phone number of the individual or facility who will be conducting the maintenance.

D.6 Photographs

D.6.a. For site or facilities with a cover or other performance standard, a structural impediment or a vapor mitigation system, include one or more photographs documenting the condition and extent of the feature at the time of the closure request. Pertinent features shall be visible and discernible.

D.6.b. Photographs shall be submitted with a title related to the site name and location, and the date on which it was taken.

## Monitoring Well Information (Attachment E)

*If any section is not relevant to the case closure request, you must fully explain the reasons why and attach that explanation to the relevant section of the form. All information submitted shall be legible. Providing illegible information may result in a submittal being considered incomplete until corrected.*

**General Directions:**

Attach monitoring well construction and development forms (DNR FORM 4400-113 A and B: http://dnr.wi.gov/topic/groundwater/documents/forms/4400_113_1_2.pdf) for all wells that will remain in-use, be transferred to another party or that could not be located. A figure of these wells should be included in Attachment B.3.d.

***Select One:***

○ No monitoring wells were required as part of this response action.

○ All monitoring wells have been located and will be properly abandoned upon the DNR granting conditional closure to the site

◉ ***Select One or More:***

☐ Not all monitoring wells can be located, despite good faith efforts. Attachment E must include description of efforts made to locate the "lost" wells.

☐ One or more wells will be transferred to another owner upon case closure being granted. Attachment E should include documentation identifying the name, address and email for the new owner(s).

☒ One or more wells will remain in use at the site after this closure. Attachment E must include documentation as to the reason(s) the well(s) will remain in use.

## Notifications to Owners of Impacted Properties (Attachment F)

*If any section is not relevant to the case closure request, you must fully explain the reasons why and attach that explanation to the relevant section of the form. All information submitted shall be legible. Providing illegible information may result in a submittal being considered incomplete until corrected.*

**General Directions:**

- State law requires that the responsible party provide a 30-day, written advance notice (i.e., a letter) to certain persons prior to applying for case closure. This requirement applies if: (1) the person conducting the response action does not own the source property; (2) the contamination has migrated onto another property; and/or (3) one or more monitoring wells will not be abandoned.
- Use of Form 4400-286, Notification of Residual Contamination and Continuing Obligations, is required under ch. NR 725 for notifying property owners and right-of-way holders about residual contamination affecting their properties, and of continuing obligations which may be imposed. This form can be downloaded at http://dnr.wi.gov/files/PDF/forms/4400/4400-286.pdf.

**Check all that apply to the site-specific circumstances of this case closure:**

| | A. Impacted Source Property and Owner is not Conducting Cleanup | B. Impacted Right of Way | C. Impacted Off-Site Property Owner | Impacted Property Notification Situations: Ch. NR 726 Appendix A Letter |
|---|---|---|---|---|
| 1. | ☒ | ☒ | ☒ | Residual groundwater contamination exceeds Ch. NR 140 Wis. Administrative Code enforcement standards. |
| 2. | ☐ | ☐ | ☐ | Residual soil contamination that attains or exceeds standards is present after the remedial action is complete, and must be properly managed should it be excavated or removed. |
| 3. | ☒ | ☐ | ☐ | An engineered cover or a soil barrier (e.g. pavement) must be maintained over contaminated soil for direct contact or groundwater infiltration concerns. |
| 4. | ☐ | ☐ | ☐ | Industrial land use soil standards were used for the clean-up standard. |
| 5. | ☐ | ☐ | ☐ | A vapor mitigation system (or other specific vapor protection) must be operated and maintained. |
| 6. | ☐ | ☐ | ☐ | Vapor assessment needed if use changes. |
| 7. | ☐ | ☐ | ☐ | Structural impediment. |
| 8. | ☐ | ☐ | ☐ | Lost, transferred or open monitoring wells. |
| 9. | ☐ | ☐ | ☐ | Not Applicable. |

If any of the previous boxes in rows 1 thru 8 were checked, include the following as part of Attachment F:

- FORM 4400-246;
- Copy of each letter sent, 30 days or more prior to requesting closure; and
- Proof of receipt for each letter.
- For this site closure, _____ (number) property (ies) has/have been impacted, the owners have been notified, and copies of the letters and receipts are included in Attachment F.

## Source Legal Documents (Attachment G)

*If any section is not relevant to the case closure request, you must fully explain the reasons why and attach that explanation to the relevant section of the form.All information submitted shall be legible. Providing illegible information may result in a submittal being considered incomplete until corrected.*

Include all of the following documents, in this order, in Attachment G:

G.1. **Deeds - Source Property and Other Impacted Properties:** The most recent deed with legal descriptions clearly labeled for (1) the **Source Property** (where the contamination originated) and (2) all **off-source** (off-site) properties where letters were required to be sent per the ch. NR 700, Wis. Adm. Code, rule series (e.g., off-site cover maintenance required, lost monitoring well, off-site cover property impacts to groundwater exceeding the ch. NR 140, Wis. Adm. Code.

***Note:*** *If a property has been purchased with a land contract and the purchaser has not yet received a deed, a copy of the land contract which includes the legal description shall be submitted instead of the most recent deed. If the property has been inherited, written documentation of the property transfer should be submitted along with the most recent deed.*

G.2. ***Certified Survey Map:*** *A copy of the certified survey map or the relevant section of the recorded plat map for those properties where the legal description in the most recent deed refers to a certified survey map or a recorded plat map.* (Lots on subdivided or platted property (e.g. lot 2 of xyz subdivision)).

G.3. **Verification of Zoning**: Documentation (e.g., official zoning map or letter from municipality) of the property's or properties' current zoning status.

G.4. **Signed Statement:** A statement signed by the Responsible Party (RP), which states that he or she believes that the attached legal description(s) accurately describe(s) the correct contaminated property or properties.

## Signatures and Findings for Closure Determination

*If any section is not relevant to the case closure request, you must fully explain the reasons why and attach that explanation to the relevant section of the form. All information submitted shall be legible. Providing illegible information may result in a submittal being considered incomplete until corrected.*

Check the correct box for this case closure request, and have either a professional engineer or a hydrogeologist, as defined in ch. NR 712, Wis. Adm. Code, sign this document.

☐ A response action(s) for this site addresses groundwater contamination (including natural attenuation remedies).

☒ The response action(s) for this site addresses media other than groundwater.

## Engineering Certification

I _____ hereby certify that I am a registered professional engineer in the State of Wisconsin, registered in accordance with the requirements of ch. A-E 4, Wis. Adm. Code; that this case closure request has been prepared by me or prepared under my supervision in accordance with the Rules of Professional Conduct in ch. A-E 8, Wis. Adm. Code; and that, to the best of my knowledge, all information contained in this case closure request is correct and the document was prepared in compliance with all applicable requirements in chs. NR 700 to 726, Wis. Adm. Code. Specifically, with respect to compliance with the rules, in my professional opinion a site investigation has been conducted in accordance with ch. NR 716, Wis. Adm. Code, and all necessary remedial actions have been completed in accordance with chs. NR 140, NR 718, NR 720, NR 722, NR 724 and NR 726, Wis. Adm. Codes."

| Printed Name | Title |
|---|---|
| | |

| Signature | Date | P.E. Stamp and Number |
|---|---|---|
| | | |

## Hydrogeologist Certification

I Clair Ruenger hereby certify that I am a hydrogeologist as that term is defined in s. NR 712.03 (1), Wis. Adm. Code, and that, to the best of my knowledge, all of the information contained in this case closure request is correct and the document was prepared by me or prepared by me or prepared under my supervision and, in compliance with all applicable requirements in chs. NR 700 to 726, Wis. Adm. Code. Specifically, with respect to compliance with the rules, in my professional opinion a site investigation has been conducted in accordance with ch. NR 716, Wis. Adm. Code, and all necessary remedial actions have been completed in accordance with chs. NR 140, NR 718, NR 720, NR 722, NR 724 and NR 726, Wis. Adm. Codes."

| Clair Ruenger, PG | Environmental Services Manager, BTS - BAAP |
|---|---|
| Printed Name | Title |
| Signature | July 29, 2014 Date |

# Data Tables Not Relevant To Case Closure Request

## A.1. Groundwater Analytical Table

The source of the groundwater contamination in Parcel H is the Propellant Burning Ground (PBG) area. Closure of the PBG groundwater plume is not part of the Parcel H closure request.

# Table A.2

## Pre-Remedial Soil Sample Analytical Results

## Parcel H - Wisconsin Department of Natural Resources Closure Report

## Badger Army Ammunition Plant

| Sample ID | Date Sampled | Depth (feet bg) | 2,4-DNT | 2,6-DNT | Lead | PCB-1260 (mg/kg) | PCB-1260 [2C] (mg/kg) |
|---|---|---|---|---|---|---|---|
| **Decontamination Oven** | | | | | | | |
| DO-03-03 | 10/22/03 | 0.5 | NA | NA | NA | **0.740* (D)** | NA |
| 027800-1-0.5 | 06/26/13 | 0.5 | NA | NA | NA | **2.28 (SL,D)** | **2.46 (D)** |
| 027800-2-0.5 | 06/26/13 | 0.5 | NA | NA | NA | 0.156 (J,SL) | 0.217 |
| 027800-3-0.5 | 06/26/13 | 0.5 | NA | NA | NA | **1.71 (SL)** | **1.87** |
| 027800-4-0.5 | 06/26/13 | 0.5 | NA | NA | NA | **1.54 (SL)** | **1.72** |
| 027800-5-0.5 | 06/26/13 | 0.5 | NA | NA | NA | 0.106 (J,SL) | 0.162 (J) |
| Cleanup Objective | | | 1.6 | 61 | 50/250 | 0.22 | 0.22 |

bg - Below grade
mg/kg - Milligrams per kilogram
NA - Not analyzed
PCB - Polychlorinated Biphenyl
Bold text identifies exceedence of Cleanup Objective (United States Environmental Protection Agency Residual Screening for BAAAP land which may be utilized for animal grazing in the future).
C - Confirmatory analysis did not confirm the presence of the analyte.
D - Elevated Limit of Detection (LOD) and Limit of Quantitation (LOQ) are due to dilution/volume of the sample.
J - Analytical result is between the LOD and LOQ.
LL - Laboratory control sample recovery was below the lower control limit.
ML - Matrix Spike and / or Matrix Spike Duplicate was below the lower control limit.
SH - Surrogate recovery exceeded the upper control limit. Analytical results for the parameter should be considered estimates.
SL Surrogate recovery was below the lower control limit. Analytical results for the parameter should be considered estimates.
* Value reported is for PCB-1254, not PCB-1260.

# Table A.3

## Post-Remedial Soil Sample Analytical Results

## Parcel H - Wisconsin Department of Natural Resources Closure Report

## Badger Army Ammunition Plant

| Sample ID | Date Sampled | Depth (feet bg) | 2,4-DNT (mg/kg) | 2,6-DNT (mg/kg) | Lead (mg/kg) | PCB-1260 (mg/kg) | PCB-1260 [2C] (mg/kg) |
|---|---|---|---|---|---|---|---|
| **Decontamination Oven** | | | | | | | |
| CS1-2.0 | 07/17/13 | 2.0 | NA | NA | NA | <0.0825 (SL) | <0.0825 |
| CS2-2.0 | 07/17/13 | 2.0 | NA | NA | NA | <0.0827 | 0.0853 (C,J) |
| CS3-2.0 | 07/17/13 | 2.0 | NA | NA | NA | <0.0822 (SL) | <0.0822 |
| CS4-2.0 | 07/17/13 | 2.0 | NA | NA | NA | <0.0811 | <0.0811 |
| 027800-6-0.5 | 06/26/13 | 0.5 | NA | NA | NA | 0.143 (J,SL) | 0.207 |
| 027800-7-0.5 | 06/26/13 | 0.5 | NA | NA | NA | <0.105 (SL) | 0.137 (J,C) |
| 027800-8-0.5 | 06/26/13 | 0.5 | NA | NA | NA | 0.154 (J,ML,SL) | 0.225 (ML) |
| 027800-9-0.5 | 06/26/13 | 0.5 | NA | NA | NA | <0.0961 (SL) | 0.104 (C,J) |
| 027800-10-0.5 | 06/26/13 | 0.5 | NA | NA | NA | 0.0964 (J,SL) | 0.169 (J) |
| 027800-11-0.5 | 06/26/13 | 0.5 | NA | NA | NA | <0.0948 (SL) | 0.143 (C,J) |
| 027800-12-0.5 | 06/27/13 | 0.5 | NA | NA | NA | <0.113 (LL,SL) | <0.113 |
| 027800-13-0.5 | 06/27/13 | 0.5 | NA | NA | NA | <0.122 (LL,SL) | <0.122 |
| 027800-14-0.5 | 06/27/13 | 0.5 | NA | NA | NA | <0.107 (LL,SL) | <0.107 |
| 027800-15-0.5 | 06/27/13 | 0.5 | NA | NA | NA | <0.102 (LL,SL) | <0.102 (SL) |
| 027800-16-0.5 | 06/27/13 | 0.5 | NA | NA | NA | <0.0966 (LL,SL) | <0.0966 |
| 027800-17-0.5 | 06/27/13 | 0.5 | NA | NA | NA | <0.108 (LL,SL) | <0.108 |
| 027800-18-0.5 | 06/27/13 | 0.5 | NA | NA | NA | <0.103 (LL,SL) | <0.103 |
| 027800-19-0.5 | 06/27/13 | 0.5 | NA | NA | NA | <0.0979 (LL,ML) | <0.0979 |
| 027800-20-0.5 | 06/27/13 | 0.5 | NA | NA | NA | <0.0945 (LL,SL) | <0.0945 |
| 027800-21-0.5 | 06/27/13 | 0.5 | NA | NA | NA | <0.102 (LL,SL) | <0.102 |
| 027800-22-0.5 | 06/27/13 | 0.5 | NA | NA | NA | <0.0967 (LL) | 0.114 (C,J) |
| 027800-23-0.5 | 06/27/13 | 0.5 | NA | NA | NA | <0.103 (LL,SL) | <0.103 |
| 027800-24-0.5 | 06/27/13 | 0.5 | NA | NA | NA | <0.0982 (LL,SL) | <0.0982 |
| 027800-25-0.5 | 06/27/13 | 0.5 | NA | NA | NA | <0.0951 (LL) | <0.0951 |
| 027800-26-0.5 | 06/27/13 | 0.5 | NA | NA | NA | <0.105 (LL) | <0.105 |
| 027800-27-0.5 | 06/27/13 | 0.5 | NA | NA | NA | <0.0988 (LL) | <0.0988 |
| 027800-28-0.5 | 06/27/13 | 0.5 | NA | NA | NA | <0.105 (LL) | <0.105 (SH) |
| Cleanup Objective | | | 1.6 | 61 | 50/250 | 1.0 | 1.0 |

bg - Below grade
mg/kg - Milligrams per kilogram
[1] - Result expressed in micrograms per kilogram.
NA - Not analyzed
PCB - Polychlorinated Biphenyl
Bold text identifies exceedence of Cleanup Objective (United States Environmental Protection Agency Residual Screening for BAAAP land which may be utilized for animal grazing in the future).
C - Confirmatory analysis did not confirm the presence of the analyte.
D - Elevated Limit of Detection (LOD) and Limit of Quantitation (LOQ) are due to dilution/volume of the sample.
J - Analytical result is between the LOD and LOQ.
LL - Laboratory control sample recovery was below the lower control limit.
ML - Matrix Spike and / or Matrix Spike Duplicate was below the lower control limit.
SH - Surrogate recovery exceeded the upper control limit. Analytical results for the parameter should be considered estimates.
SL Surrogate recovery was below the lower control limit. Analytical results for the parameter should be considered estimates.
Shaded cell identifies previously reported result.

# Data Tables Not Relevant To Case Closure Request

## A.4. Pre and Post Remaining Soil Contamination Soil Analytical Tables

There were no soil samples remaining following remedial activities that contained concentrations of contaminants above the Cleanup Objectives in Parcel H.

# Data Tables Not Relevant To Case Closure Request

## A.5. Vapor Analytical Table

Vapor studies conducted in Parcel H relate to the groundwater contaminant plume from the Propellant Burning Ground (PBG) area. Closure of the PBG groundwater plume is not part of the Parcel H closure request.

# Data Tables Not Relevant To Case Closure Request

## A.6. Other Media of Concern

No surface water is present at or adjacent to property.

Table A.7

Groundwater Elevation Data

Parcel H - WDNR Closure Report

| Date | WELL_ID | WELL NAME | Result (msl) |
|---|---|---|---|
| 1/6/1988 | 615 | PBN-8202C | 776.28 |
| 1/6/1988 | 614 | PBN-8202B | 776.39 |
| 1/8/1988 | 623 | PBN-8205B | 774.68 |
| 1/8/1988 | 622 | PBN-8205A | 774.7 |
| 1/8/1988 | 624 | PBN-8205C | 774.78 |
| 1/8/1988 | 601 | S1117 | 774.9 |
| 2/18/1988 | 615 | PBN-8202C | 776.18 |
| 2/18/1988 | 614 | PBN-8202B | 776.29 |
| 3/10/1988 | 607 | PBM-8203 | 774.93 |
| 3/11/1988 | 609 | PBM-8205 | 774.72 |
| 3/11/1988 | 608 | PBM-8204 | 774.75 |
| 3/11/1988 | 613 | PBN-8202A | 776.04 |
| 3/11/1988 | 614 | PBN-8202B | 776.19 |
| 3/11/1988 | 610 | PBN-8201A | 776.83 |
| 3/11/1988 | 611 | PBN-8201B | 776.87 |
| 3/11/1988 | 612 | PBN-8201C | 776.87 |
| 3/14/1988 | 615 | PBN-8202C | 776.07 |
| 3/15/1988 | 623 | PBN-8205B | 774.28 |
| 3/15/1988 | 624 | PBN-8205C | 774.38 |
| 3/15/1988 | 622 | PBN-8205A | 774.4 |
| 3/15/1988 | 601 | S1117 | 774.45 |
| 3/16/1988 | 622 | PBN-8205A | 774.4 |
| 4/18/1988 | 613 | PBN-8202A | 775.84 |
| 4/18/1988 | 614 | PBN-8202B | 775.99 |
| 4/18/1988 | 615 | PBN-8202C | 776.08 |
| 5/19/1988 | 613 | PBN-8202A | 775.79 |
| 5/19/1988 | 615 | PBN-8202C | 775.88 |
| 5/19/1988 | 614 | PBN-8202B | 775.89 |
| 6/10/1988 | 613 | PBN-8202A | 775.69 |
| 6/10/1988 | 615 | PBN-8202C | 775.78 |
| 6/10/1988 | 614 | PBN-8202B | 775.84 |
| 7/5/1988 | 613 | PBN-8202A | 777.64 |
| 7/5/1988 | 615 | PBN-8202C | 777.88 |
| 7/5/1988 | 614 | PBN-8202B | 777.89 |
| 7/5/1988 | 611 | PBN-8201B | 778.57 |
| 7/5/1988 | 612 | PBN-8201C | 778.97 |
| 7/5/1988 | 610 | PBN-8201A | 779.18 |
| 7/6/1988 | 622 | PBN-8205A | 776.3 |
| 7/8/1988 | 623 | PBN-8205B | 775.88 |
| 7/8/1988 | 624 | PBN-8205C | 776.28 |
| 7/8/1988 | 608 | PBM-8204 | 776.42 |
| 7/8/1988 | 607 | PBM-8203 | 776.43 |
| 7/11/1988 | 601 | S1117 | 775.8 |
| 7/11/1988 | 609 | PBM-8205 | 776.52 |
| 8/4/1988 | 613 | PBN-8202A | 775.64 |
| 8/4/1988 | 615 | PBN-8202C | 775.73 |

| | | | |
|---|---|---|---|
| 8/4/1988 | 614 | PBN-8202B | 775.79 |
| 9/15/1988 | 615 | PBN-8202C | 777.68 |
| 9/15/1988 | 614 | PBN-8202B | 777.69 |
| 9/15/1988 | 611 | PBN-8201B | 778.47 |
| 9/15/1988 | 612 | PBN-8201C | 778.77 |
| 9/15/1988 | 610 | PBN-8201A | 778.78 |
| 9/15/1988 | 613 | PBN-8202A | 781.44 |
| 9/19/1988 | 623 | PBN-8205B | 775.68 |
| 9/19/1988 | 624 | PBN-8205C | 775.88 |
| 9/19/1988 | 622 | PBN-8205A | 776.2 |
| 9/19/1988 | 607 | PBM-8203 | 776.23 |
| 9/20/1988 | 601 | S1117 | 775.6 |
| 9/20/1988 | 608 | PBM-8204 | 776.12 |
| 9/20/1988 | 609 | PBM-8205 | 776.22 |
| 10/21/1988 | 613 | PBN-8202A | 775.39 |
| 10/21/1988 | 615 | PBN-8202C | 775.43 |
| 10/21/1988 | 614 | PBN-8202B | 775.54 |
| 11/17/1988 | 613 | PBN-8202A | 775.24 |
| 11/17/1988 | 615 | PBN-8202C | 775.33 |
| 11/17/1988 | 614 | PBN-8202B | 775.36 |
| 12/13/1988 | 613 | PBN-8202A | 775.24 |
| 12/13/1988 | 614 | PBN-8202B | 775.34 |
| 12/14/1988 | 613 | PBN-8202A | 775.19 |
| 12/14/1988 | 615 | PBN-8202C | 775.28 |
| 12/14/1988 | 614 | PBN-8202B | 775.29 |
| 1/6/1989 | 608 | PBM-8204 | 774.02 |
| 1/6/1989 | 607 | PBM-8203 | 774.26 |
| 1/7/1989 | 624 | PBN-8205C | 773.7 |
| 1/7/1989 | 610 | PBN-8201A | 776.14 |
| 1/7/1989 | 611 | PBN-8201B | 776.15 |
| 1/7/1989 | 612 | PBN-8201C | 776.15 |
| 1/8/1989 | 623 | PBN-8205B | 773.68 |
| 1/9/1989 | 622 | PBN-8205A | 773.67 |
| 1/10/1989 | 609 | PBM-8205 | 773.68 |
| 1/12/1989 | 614 | PBN-8202B | 776.49 |
| 1/12/1989 | 615 | PBN-8202C | 776.78 |
| 1/16/1989 | 613 | PBN-8202A | 775.04 |
| 1/16/1989 | 615 | PBN-8202C | 775.13 |
| 1/16/1989 | 614 | PBN-8202B | 775.19 |
| 1/22/1989 | 613 | PBN-8202A | 776.14 |
| 1/23/1989 | 601 | S1117 | 773.68 |
| 2/13/1989 | 613 | PBN-8202A | 774.94 |
| 2/17/1989 | 613 | PBN-8202A | 774.94 |
| 2/17/1989 | 614 | PBN-8202B | 775.12 |
| 3/13/1989 | 613 | PBN-8202A | 774.89 |
| 3/13/1989 | 614 | PBN-8202B | 775.04 |
| 3/22/1989 | 608 | PBM-8204 | 773.83 |
| 3/22/1989 | 609 | PBM-8205 | 773.83 |
| 3/22/1989 | 611 | PBN-8201B | 776.03 |
| 3/22/1989 | 612 | PBN-8201C | 776.05 |
| 4/13/1989 | 614 | PBN-8202B | 775.09 |
| 5/2/1989 | 659 | LON-8903A | 774.8 |

| | | | |
|---|---|---|---|
| 5/2/1989 | 660 | LON-8903B | 775.05 |
| 5/3/1989 | 607 | PBM-8203 | 774.05 |
| 5/8/1989 | 623 | PBN-8205B | 773.49 |
| 5/9/1989 | 622 | PBN-8205A | 773.35 |
| 5/11/1989 | 610 | PBN-8201A | 776.03 |
| 5/17/1989 | 613 | PBN-8202A | 774.79 |
| 5/17/1989 | 615 | PBN-8202C | 774.88 |
| 5/17/1989 | 614 | PBN-8202B | 774.94 |
| 5/18/1989 | 601 | S1117 | 773.51 |
| 5/18/1989 | 624 | PBN-8205C | 773.6 |
| 5/18/1989 | 613 | PBN-8202A | 775.14 |
| 5/18/1989 | 614 | PBN-8202B | 775.32 |
| 5/18/1989 | 615 | PBN-8202C | 776.78 |
| 5/20/1989 | 639 | PBM-8909 | 775.94 |
| 5/21/1989 | 657 | LON-8902A | 775.07 |
| 5/21/1989 | 656 | LOM-8901 | 775.47 |
| 6/19/1989 | 657 | LON-8902A | 774.64 |
| 6/19/1989 | 656 | LOM-8901 | 775.18 |
| 6/20/1989 | 659 | LON-8903A | 774.39 |
| 6/20/1989 | 660 | LON-8903B | 774.64 |
| 6/20/1989 | 639 | PBM-8909 | 775.54 |
| 6/21/1989 | 612 | PBN-8201C | 775.42 |
| 6/21/1989 | 610 | PBN-8201A | 775.43 |
| 6/21/1989 | 611 | PBN-8201B | 775.44 |
| 6/22/1989 | 623 | PBN-8205B | 772.98 |
| 6/22/1989 | 622 | PBN-8205A | 773 |
| 6/22/1989 | 608 | PBM-8204 | 773.32 |
| 6/22/1989 | 609 | PBM-8205 | 773.32 |
| 6/22/1989 | 607 | PBM-8203 | 773.58 |
| 6/26/1989 | 601 | S1117 | 773 |
| 6/26/1989 | 624 | PBN-8205C | 773.03 |
| 6/26/1989 | 613 | PBN-8202A | 774.59 |
| 6/26/1989 | 615 | PBN-8202C | 774.68 |
| 6/26/1989 | 614 | PBN-8202B | 774.74 |
| 7/18/1989 | 614 | PBN-8202B | 773.74 |
| 7/18/1989 | 615 | PBN-8202C | 774.68 |
| 8/15/1989 | 613 | PBN-8202A | 774.29 |
| 8/15/1989 | 615 | PBN-8202C | 774.33 |
| 8/15/1989 | 614 | PBN-8202B | 774.39 |
| 9/6/1989 | 622 | PBN-8205A | 772.5 |
| 9/6/1989 | 610 | PBN-8201A | 774.93 |
| 9/6/1989 | 611 | PBN-8201B | 774.97 |
| 9/6/1989 | 612 | PBN-8201C | 774.97 |
| 9/7/1989 | 623 | PBN-8205B | 772.48 |
| 9/7/1989 | 624 | PBN-8205C | 772.53 |
| 9/7/1989 | 608 | PBM-8204 | 772.77 |
| 9/7/1989 | 609 | PBM-8205 | 772.8 |
| 9/7/1989 | 607 | PBM-8203 | 773.03 |
| 9/7/1989 | 613 | PBN-8202A | 774.11 |
| 9/7/1989 | 615 | PBN-8202C | 774.18 |
| 9/7/1989 | 614 | PBN-8202B | 774.24 |
| 9/11/1989 | 601 | S1117 | 772.5 |

| | | | |
|---|---|---|---|
| 9/27/1989 | 639 | PBM-8909 | 774.91 |
| 9/28/1989 | 659 | LON-8903A | 773.79 |
| 9/28/1989 | 657 | LON-8902A | 774.04 |
| 9/28/1989 | 660 | LON-8903B | 774.09 |
| 9/28/1989 | 656 | LOM-8901 | 774.63 |
| 10/3/1989 | 613 | PBN-8202A | 774.11 |
| 10/3/1989 | 615 | PBN-8202C | 774.18 |
| 10/3/1989 | 614 | PBN-8202B | 774.24 |
| 2/13/1990 | 615 | PBN-8202C | 772.83 |
| 2/13/1990 | 613 | PBN-8202A | 773.09 |
| 2/13/1990 | 614 | PBN-8202B | 773.19 |
| 3/12/1990 | 639 | PBM-8909 | 773.94 |
| 3/13/1990 | 659 | LON-8903A | 772.79 |
| 3/13/1990 | 657 | LON-8902A | 772.99 |
| 3/13/1990 | 660 | LON-8903B | 773.04 |
| 3/13/1990 | 656 | LOM-8901 | 773.63 |
| 3/13/1990 | 612 | PBN-8201C | 773.92 |
| 3/14/1990 | 622 | PBN-8205A | 771.37 |
| 3/14/1990 | 623 | PBN-8205B | 771.38 |
| 3/14/1990 | 624 | PBN-8205C | 771.41 |
| 3/14/1990 | 607 | PBM-8203 | 771.93 |
| 3/14/1990 | 613 | PBN-8202A | 773.04 |
| 3/14/1990 | 615 | PBN-8202C | 773.08 |
| 3/14/1990 | 614 | PBN-8202B | 773.19 |
| 3/14/1990 | 610 | PBN-8201A | 773.88 |
| 3/14/1990 | 611 | PBN-8201B | 773.92 |
| 3/19/1990 | 601 | S1117 | 771.33 |
| 3/19/1990 | 608 | PBM-8204 | 771.62 |
| 3/19/1990 | 609 | PBM-8205 | 771.67 |
| 4/9/1990 | 613 | PBN-8202A | 773.04 |
| 4/9/1990 | 615 | PBN-8202C | 773.08 |
| 4/9/1990 | 614 | PBN-8202B | 773.19 |
| 5/16/1990 | 615 | PBN-8202C | 772.73 |
| 5/16/1990 | 614 | PBN-8202B | 772.79 |
| 5/16/1990 | 613 | PBN-8202A | 772.94 |
| 6/12/1990 | 639 | PBM-8909 | 773.44 |
| 6/13/1990 | 659 | LON-8903A | 772.29 |
| 6/13/1990 | 657 | LON-8902A | 772.49 |
| 6/13/1990 | 660 | LON-8903B | 772.59 |
| 6/13/1990 | 656 | LOM-8901 | 773.03 |
| 6/13/1990 | 610 | PBN-8201A | 773.28 |
| 6/13/1990 | 611 | PBN-8201B | 773.32 |
| 6/14/1990 | 623 | PBN-8205B | 770.83 |
| 6/14/1990 | 622 | PBN-8205A | 770.85 |
| 6/14/1990 | 624 | PBN-8205C | 770.88 |
| 6/14/1990 | 612 | PBN-8201C | 773.3 |
| 6/18/1990 | 601 | S1117 | 770.85 |
| 6/18/1990 | 608 | PBM-8204 | 771.07 |
| 6/18/1990 | 609 | PBM-8205 | 771.12 |
| 6/18/1990 | 607 | PBM-8203 | 771.33 |
| 6/18/1990 | 613 | PBN-8202A | 772.34 |
| 6/18/1990 | 615 | PBN-8202C | 772.43 |

| | | | |
|---|---|---|---|
| 6/18/1990 | 614 | PBN-8202B | 772.49 |
| 7/19/1990 | 613 | PBN-8202A | 772.34 |
| 7/19/1990 | 615 | PBN-8202C | 772.43 |
| 7/19/1990 | 614 | PBN-8202B | 772.49 |
| 8/13/1990 | 614 | PBN-8202B | 771.84 |
| 8/13/1990 | 613 | PBN-8202A | 771.99 |
| 8/13/1990 | 615 | PBN-8202C | 772.08 |
| 9/6/1990 | 639 | PBM-8909 | 772.97 |
| 9/10/1990 | 657 | LON-8902A | 771.54 |
| 9/10/1990 | 613 | PBN-8202A | 771.94 |
| 9/10/1990 | 615 | PBN-8202C | 772.01 |
| 9/10/1990 | 614 | PBN-8202B | 772.06 |
| 9/10/1990 | 656 | LOM-8901 | 772.63 |
| 9/11/1990 | 659 | LON-8903A | 771.85 |
| 9/11/1990 | 660 | LON-8903B | 772.12 |
| 9/11/1990 | 610 | PBN-8201A | 772.8 |
| 9/11/1990 | 611 | PBN-8201B | 772.87 |
| 9/11/1990 | 612 | PBN-8201C | 772.87 |
| 9/12/1990 | 624 | PBN-8205C | 770.18 |
| 9/12/1990 | 623 | PBN-8205B | 770.33 |
| 9/12/1990 | 601 | S1117 | 770.35 |
| 9/12/1990 | 622 | PBN-8205A | 770.35 |
| 9/12/1990 | 608 | PBM-8204 | 770.62 |
| 9/12/1990 | 609 | PBM-8205 | 770.67 |
| 9/12/1990 | 607 | PBM-8203 | 770.88 |
| 10/17/1990 | 614 | PBN-8202B | 771.99 |
| 11/13/1990 | 613 | PBN-8202A | 770.64 |
| 11/13/1990 | 614 | PBN-8202B | 770.74 |
| 11/13/1990 | 615 | PBN-8202C | 771.78 |
| 12/18/1990 | 659 | LON-8903A | 771.57 |
| 12/18/1990 | 657 | LON-8902A | 771.82 |
| 12/18/1990 | 660 | LON-8903B | 771.84 |
| 12/18/1990 | 656 | LOM-8901 | 772.38 |
| 12/20/1990 | 613 | PBN-8202A | 771.69 |
| 12/20/1990 | 615 | PBN-8202C | 771.73 |
| 12/20/1990 | 614 | PBN-8202B | 771.79 |
| 12/26/1990 | 639 | PBM-8909 | 772.59 |
| 1/3/1991 | 601 | S1117 | 770 |
| 1/3/1991 | 610 | PBN-8201A | 772.48 |
| 1/3/1991 | 611 | PBN-8201B | 772.52 |
| 1/3/1991 | 612 | PBN-8201C | 772.52 |
| 1/7/1991 | 623 | PBN-8205B | 769.98 |
| 1/7/1991 | 622 | PBN-8205A | 770 |
| 1/7/1991 | 624 | PBN-8205C | 770.03 |
| 1/8/1991 | 608 | PBM-8204 | 770.27 |
| 1/8/1991 | 609 | PBM-8205 | 770.32 |
| 1/8/1991 | 607 | PBM-8203 | 770.53 |
| 1/22/1991 | 613 | PBN-8202A | 771.59 |
| 1/22/1991 | 615 | PBN-8202C | 771.68 |
| 1/22/1991 | 614 | PBN-8202B | 771.74 |
| 2/20/1991 | 614 | PBN-8202B | 771.04 |
| 2/20/1991 | 613 | PBN-8202A | 771.54 |

| | | | |
|---|---|---|---|
| 2/20/1991 | 615 | PBN-8202C | 771.63 |
| 3/22/1991 | 601 | S1117 | 769.85 |
| 3/22/1991 | 608 | PBM-8204 | 770.07 |
| 3/22/1991 | 609 | PBM-8205 | 770.17 |
| 3/22/1991 | 607 | PBM-8203 | 770.35 |
| 3/23/1991 | 623 | PBN-8205B | 769.78 |
| 3/23/1991 | 622 | PBN-8205A | 769.87 |
| 3/23/1991 | 624 | PBN-8205C | 770.38 |
| 3/23/1991 | 613 | PBN-8202A | 771.36 |
| 3/23/1991 | 615 | PBN-8202C | 771.5 |
| 3/23/1991 | 614 | PBN-8202B | 771.57 |
| 3/23/1991 | 610 | PBN-8201A | 772.31 |
| 3/26/1991 | 639 | PBM-8909 | 772.44 |
| 3/27/1991 | 659 | LON-8903A | 771.42 |
| 3/27/1991 | 657 | LON-8902A | 771.61 |
| 3/27/1991 | 660 | LON-8903B | 771.74 |
| 3/27/1991 | 656 | LOM-8901 | 772.18 |
| 4/2/1991 | 623 | PBN-8205B | 769.81 |
| 4/9/1991 | 613 | PBN-8202A | 771.34 |
| 4/9/1991 | 615 | PBN-8202C | 771.43 |
| 4/9/1991 | 614 | PBN-8202B | 771.49 |
| 4/18/1991 | 614 | PBN-8202B | 775.99 |
| 4/18/1991 | 615 | PBN-8202C | 778.08 |
| 5/15/1991 | 613 | PBN-8202A | 771.29 |
| 5/15/1991 | 615 | PBN-8202C | 771.35 |
| 5/15/1991 | 614 | PBN-8202B | 771.44 |
| 6/17/1991 | 601 | S1117 | 769.73 |
| 6/17/1991 | 613 | PBN-8202A | 771.37 |
| 6/18/1991 | 624 | PBN-8205C | 769.75 |
| 6/18/1991 | 608 | PBM-8204 | 769.97 |
| 6/18/1991 | 609 | PBM-8205 | 770.05 |
| 6/18/1991 | 614 | PBN-8202B | 771.09 |
| 6/18/1991 | 615 | PBN-8202C | 771.71 |
| 6/18/1991 | 610 | PBN-8201A | 772.1 |
| 6/18/1991 | 612 | PBN-8201C | 772.2 |
| 6/18/1991 | 611 | PBN-8201B | 772.22 |
| 6/19/1991 | 623 | PBN-8205B | 769.68 |
| 6/19/1991 | 622 | PBN-8205A | 769.7 |
| 6/20/1991 | 639 | PBM-8909 | 772.29 |
| 6/25/1991 | 657 | LON-8902A | 771.44 |
| 6/25/1991 | 660 | LON-8903B | 771.46 |
| 6/25/1991 | 656 | LOM-8901 | 771.98 |
| 6/26/1991 | 659 | LON-8903A | 771.23 |
| 7/18/1991 | 613 | PBN-8202A | 771.27 |
| 7/18/1991 | 615 | PBN-8202C | 771.33 |
| 7/18/1991 | 614 | PBN-8202B | 771.44 |
| 8/1/1991 | 608 | PBM-8204 | 769.96 |
| 9/12/1991 | 610 | PBN-8201A | 770.28 |
| 9/12/1991 | 639 | PBM-8909 | 772.27 |
| 9/16/1991 | 601 | S1117 | 769.6 |
| 9/16/1991 | 624 | PBN-8205C | 769.63 |
| 9/16/1991 | 622 | PBN-8205A | 769.72 |

| | | | |
|---|---|---|---|
| 9/16/1991 | 608 | PBM-8204 | 769.85 |
| 9/16/1991 | 609 | PBM-8205 | 769.92 |
| 9/16/1991 | 607 | PBM-8203 | 770.13 |
| 9/16/1991 | 623 | PBN-8205B | 771.33 |
| 9/16/1991 | 611 | PBN-8201B | 772.14 |
| 9/16/1991 | 612 | PBN-8201C | 772.14 |
| 9/17/1991 | 659 | LON-8903A | 771.14 |
| 9/17/1991 | 615 | PBN-8202C | 771.28 |
| 9/17/1991 | 614 | PBN-8202B | 771.32 |
| 9/17/1991 | 613 | PBN-8202A | 771.357 |
| 9/17/1991 | 657 | LON-8902A | 771.37 |
| 9/17/1991 | 660 | LON-8903B | 771.44 |
| 9/17/1991 | 656 | LOM-8901 | 771.98 |
| 11/8/1991 | 612 | PBN-8201C | 772.27 |
| 11/23/1991 | 609 | PBM-8205 | 770.12 |
| 11/23/1991 | 656 | LOM-8901 | 772.08 |
| 11/23/1991 | 639 | PBM-8909 | 772.34 |
| 11/24/1991 | 601 | S1117 | 769.6 |
| 11/24/1991 | 608 | PBM-8204 | 769.92 |
| 11/25/1991 | 607 | PBM-8203 | 770.13 |
| 11/25/1991 | 611 | PBN-8201B | 772.27 |
| 12/4/1991 | 613 | PBN-8202A | 771.34 |
| 12/4/1991 | 610 | PBN-8201A | 772.18 |
| 12/5/1991 | 623 | PBN-8205B | 769.48 |
| 12/5/1991 | 622 | PBN-8205A | 769.6 |
| 12/5/1991 | 614 | PBN-8202B | 770.49 |
| 12/5/1991 | 615 | PBN-8202C | 771.48 |
| 12/6/1991 | 624 | PBN-8205C | 769.78 |
| 12/7/1991 | 659 | LON-8903A | 771.29 |
| 12/7/1991 | 660 | LON-8903B | 771.49 |
| 12/7/1991 | 657 | LON-8902A | 771.54 |
| 12/10/1991 | 613 | PBN-8202A | 769.89 |
| 12/10/1991 | 611 | PBN-8201B | 771.12 |
| 12/10/1991 | 612 | PBN-8201C | 771.12 |
| 12/10/1991 | 610 | PBN-8201A | 771.13 |
| 12/11/1991 | 601 | S1117 | 769.65 |
| 12/11/1991 | 615 | PBN-8202C | 770.31 |
| 12/11/1991 | 614 | PBN-8202B | 770.36 |
| 12/11/1991 | 639 | PBM-8909 | 772.34 |
| 12/12/1991 | 608 | PBM-8204 | 768.88 |
| 12/12/1991 | 623 | PBN-8205B | 769.78 |
| 12/12/1991 | 622 | PBN-8205A | 769.8 |
| 12/12/1991 | 624 | PBN-8205C | 769.83 |
| 12/12/1991 | 609 | PBM-8205 | 770.12 |
| 12/12/1991 | 607 | PBM-8203 | 770.21 |
| 12/13/1991 | 656 | LOM-8901 | 772.08 |
| 12/16/1991 | 659 | LON-8903A | 771.29 |
| 12/16/1991 | 660 | LON-8903B | 771.59 |
| 12/16/1991 | 657 | LON-8902A | 772.49 |
| 3/16/1992 | 623 | PBN-8205B | 769.78 |
| 3/16/1992 | 622 | PBN-8205A | 769.8 |
| 3/16/1992 | 624 | PBN-8205C | 769.81 |

| | | | |
|---|---|---|---|
| 3/16/1992 | 608 | PBM-8204 | 770.02 |
| 3/16/1992 | 607 | PBM-8203 | 770.27 |
| 3/16/1992 | 610 | PBN-8201A | 772.24 |
| 3/16/1992 | 611 | PBN-8201B | 772.27 |
| 3/16/1992 | 612 | PBN-8201C | 772.27 |
| 3/16/1992 | 639 | PBM-8909 | 772.37 |
| 3/17/1992 | 601 | S1117 | 769.7 |
| 3/17/1992 | 609 | PBM-8205 | 770.12 |
| 3/17/1992 | 613 | PBN-8202A | 771.27 |
| 3/17/1992 | 615 | PBN-8202C | 771.35 |
| 3/17/1992 | 614 | PBN-8202B | 771.42 |
| 3/23/1992 | 659 | LON-8903A | 771.27 |
| 3/23/1992 | 657 | LON-8902A | 771.49 |
| 3/23/1992 | 660 | LON-8903B | 771.54 |
| 3/23/1992 | 656 | LOM-8901 | 772.08 |
| 4/8/1992 | 613 | PBN-8202A | 771.34 |
| 4/8/1992 | 615 | PBN-8202C | 771.48 |
| 4/8/1992 | 614 | PBN-8202B | 771.59 |
| 4/9/1992 | 610 | PBN-8201A | 772.28 |
| 4/9/1992 | 612 | PBN-8201C | 772.37 |
| 4/9/1992 | 611 | PBN-8201B | 772.47 |
| 4/10/1992 | 656 | LOM-8901 | 772.18 |
| 4/11/1992 | 601 | S1117 | 769.7 |
| 4/11/1992 | 608 | PBM-8204 | 770.02 |
| 4/11/1992 | 609 | PBM-8205 | 770.12 |
| 4/11/1992 | 607 | PBM-8203 | 770.23 |
| 4/13/1992 | 623 | PBN-8205B | 769.68 |
| 4/13/1992 | 624 | PBN-8205C | 769.78 |
| 4/13/1992 | 622 | PBN-8205A | 769.8 |
| 4/22/1992 | 659 | LON-8903A | 771.29 |
| 4/22/1992 | 660 | LON-8903B | 771.49 |
| 4/22/1992 | 657 | LON-8902A | 771.54 |
| 4/22/1992 | 639 | PBM-8909 | 772.34 |
| 6/16/1992 | 659 | LON-8903A | 771.39 |
| 6/16/1992 | 660 | LON-8903B | 771.64 |
| 6/16/1992 | 610 | PBN-8201A | 772.33 |
| 6/16/1992 | 611 | PBN-8201B | 772.37 |
| 6/16/1992 | 612 | PBN-8201C | 772.37 |
| 6/16/1992 | 639 | PBM-8909 | 772.47 |
| 6/16/1992 | 657 | LON-8902A | 773.06 |
| 6/17/1992 | 601 | S1117 | 769.85 |
| 6/17/1992 | 623 | PBN-8205B | 769.85 |
| 6/17/1992 | 622 | PBN-8205A | 769.87 |
| 6/17/1992 | 608 | PBM-8204 | 770.12 |
| 6/17/1992 | 609 | PBM-8205 | 770.19 |
| 6/17/1992 | 607 | PBM-8203 | 770.37 |
| 6/17/1992 | 613 | PBN-8202A | 771.44 |
| 6/17/1992 | 615 | PBN-8202C | 771.51 |
| 6/17/1992 | 614 | PBN-8202B | 771.57 |
| 6/23/1992 | 656 | LOM-8901 | 772.21 |
| 9/24/1992 | 656 | LOM-8901 | 772.18 |
| 9/24/1992 | 656 | LOM-8901 | 772.18 |

| | | | |
|---|---|---|---|
| 9/25/1992 | 623 | PBN-8205B | 769.68 |
| 9/25/1992 | 623 | PBN-8205B | 769.68 |
| 9/25/1992 | 622 | PBN-8205A | 769.7 |
| 9/25/1992 | 622 | PBN-8205A | 769.7 |
| 9/25/1992 | 624 | PBN-8205C | 769.75 |
| 9/25/1992 | 624 | PBN-8205C | 769.75 |
| 9/25/1992 | 608 | PBM-8204 | 769.97 |
| 9/25/1992 | 608 | PBM-8204 | 769.97 |
| 9/25/1992 | 609 | PBM-8205 | 770.04 |
| 9/25/1992 | 609 | PBM-8205 | 770.04 |
| 9/25/1992 | 607 | PBM-8203 | 770.29 |
| 9/25/1992 | 607 | PBM-8203 | 770.29 |
| 9/25/1992 | 660 | LON-8903B | 771.29 |
| 9/25/1992 | 660 | LON-8903B | 771.29 |
| 9/25/1992 | 613 | PBN-8202A | 771.36 |
| 9/25/1992 | 613 | PBN-8202A | 771.36 |
| 9/25/1992 | 615 | PBN-8202C | 771.43 |
| 9/25/1992 | 615 | PBN-8202C | 771.43 |
| 9/25/1992 | 614 | PBN-8202B | 771.49 |
| 9/25/1992 | 614 | PBN-8202B | 771.49 |
| 9/25/1992 | 657 | LON-8902A | 771.56 |
| 9/25/1992 | 657 | LON-8902A | 771.56 |
| 9/25/1992 | 659 | LON-8903A | 771.69 |
| 9/25/1992 | 659 | LON-8903A | 771.69 |
| 9/25/1992 | 610 | PBN-8201A | 772.3 |
| 9/25/1992 | 610 | PBN-8201A | 772.3 |
| 9/25/1992 | 611 | PBN-8201B | 772.33 |
| 9/25/1992 | 611 | PBN-8201B | 772.33 |
| 9/25/1992 | 612 | PBN-8201C | 772.37 |
| 9/25/1992 | 612 | PBN-8201C | 772.37 |
| 9/25/1992 | 639 | PBM-8909 | 772.41 |
| 9/25/1992 | 639 | PBM-8909 | 772.41 |
| 9/26/1992 | 601 | S1117 | 769.72 |
| 9/26/1992 | 601 | S1117 | 769.72 |
| 12/14/1992 | 622 | PBN-8205A | 769.87 |
| 12/14/1992 | 622 | PBN-8205A | 769.87 |
| 12/14/1992 | 608 | PBM-8204 | 770.12 |
| 12/14/1992 | 608 | PBM-8204 | 770.12 |
| 12/14/1992 | 613 | PBN-8202A | 771.49 |
| 12/14/1992 | 613 | PBN-8202A | 771.49 |
| 12/14/1992 | 610 | PBN-8201A | 772.4 |
| 12/14/1992 | 610 | PBN-8201A | 772.4 |
| 12/15/1992 | 659 | LON-8903A | 771.44 |
| 12/15/1992 | 659 | LON-8903A | 771.44 |
| 12/15/1992 | 615 | PBN-8202C | 771.58 |
| 12/15/1992 | 615 | PBN-8202C | 771.58 |
| 12/15/1992 | 614 | PBN-8202B | 771.64 |
| 12/15/1992 | 614 | PBN-8202B | 771.64 |
| 12/15/1992 | 657 | LON-8902A | 771.68 |
| 12/15/1992 | 657 | LON-8902A | 771.68 |
| 12/15/1992 | 660 | LON-8903B | 771.7 |
| 12/15/1992 | 660 | LON-8903B | 771.7 |

| | | | |
|---|---|---|---|
| 12/15/1992 | 611 | PBN-8201B | 772.45 |
| 12/15/1992 | 611 | PBN-8201B | 772.45 |
| 12/15/1992 | 612 | PBN-8201C | 772.47 |
| 12/15/1992 | 612 | PBN-8201C | 772.47 |
| 12/16/1992 | 623 | PBN-8205B | 769.75 |
| 12/16/1992 | 623 | PBN-8205B | 769.75 |
| 12/16/1992 | 624 | PBN-8205C | 769.86 |
| 12/16/1992 | 624 | PBN-8205C | 769.86 |
| 3/3/1993 | 622 | PBN-8205A | 770.05 |
| 3/3/1993 | 608 | PBM-8204 | 770.32 |
| 3/3/1993 | 613 | PBN-8202A | 771.67 |
| 3/3/1993 | 610 | PBN-8201A | 772.53 |
| 3/3/1993 | 611 | PBN-8201B | 772.57 |
| 3/3/1993 | 612 | PBN-8201C | 772.57 |
| 3/4/1993 | 659 | LON-8903A | 771.54 |
| 3/4/1993 | 615 | PBN-8202C | 771.74 |
| 3/4/1993 | 614 | PBN-8202B | 771.79 |
| 3/4/1993 | 657 | LON-8902A | 771.79 |
| 3/4/1993 | 660 | LON-8903B | 771.81 |
| 3/8/1993 | 623 | PBN-8205B | 769.99 |
| 3/8/1993 | 624 | PBN-8205C | 770.07 |
| 6/14/1993 | 622 | PBN-8205A | 771.42 |
| 6/14/1993 | 608 | PBM-8204 | 771.64 |
| 6/14/1993 | 660 | LON-8903B | 772.59 |
| 6/14/1993 | 659 | LON-8903A | 772.89 |
| 6/14/1993 | 613 | PBN-8202A | 772.97 |
| 6/14/1993 | 657 | LON-8902A | 773.1 |
| 6/14/1993 | 610 | PBN-8201A | 773.81 |
| 6/14/1993 | 611 | PBN-8201B | 773.87 |
| 6/14/1993 | 612 | PBN-8201C | 773.87 |
| 6/15/1993 | 615 | PBN-8202C | 763.02 |
| 6/15/1993 | 623 | PBN-8205B | 771.35 |
| 6/15/1993 | 624 | PBN-8205C | 771.42 |
| 6/15/1993 | 614 | PBN-8202B | 773.09 |
| 9/15/1993 | 657 | LON-8902A | 775.52 |
| 9/15/1993 | 610 | PBN-8201A | 776.48 |
| 9/15/1993 | 611 | PBN-8201B | 776.53 |
| 9/15/1993 | 612 | PBN-8201C | 776.55 |
| 9/16/1993 | 623 | PBN-8205B | 773.89 |
| 9/16/1993 | 622 | PBN-8205A | 773.96 |
| 9/16/1993 | 608 | PBM-8204 | 774.26 |
| 9/16/1993 | 659 | LON-8903A | 775.29 |
| 9/16/1993 | 660 | LON-8903B | 775.54 |
| 9/16/1993 | 615 | PBN-8202C | 775.58 |
| 9/16/1993 | 613 | PBN-8202A | 775.6 |
| 9/16/1993 | 614 | PBN-8202B | 775.65 |
| 9/20/1993 | 624 | PBN-8205C | 774.04 |
| 11/29/1993 | 608 | PBM-8204 | 776.08 |
| 11/29/1993 | 659 | LON-8903A | 777.32 |
| 11/29/1993 | 613 | PBN-8202A | 777.5 |
| 11/29/1993 | 657 | LON-8902A | 777.5 |
| 11/29/1993 | 615 | PBN-8202C | 777.54 |

| | | | |
|---|---|---|---|
| 11/29/1993 | 660 | LON-8903B | 777.54 |
| 11/29/1993 | 614 | PBN-8202B | 777.6 |
| 11/29/1993 | 610 | PBN-8201A | 778.46 |
| 11/29/1993 | 612 | PBN-8201C | 778.49 |
| 11/29/1993 | 611 | PBN-8201B | 778.51 |
| 11/30/1993 | 624 | PBN-8205C | 775.78 |
| 11/30/1993 | 622 | PBN-8205A | 775.8 |
| 11/30/1993 | 623 | PBN-8205B | 775.81 |
| 2/28/1994 | 622 | PBN-8205A | 776.75 |
| 2/28/1994 | 608 | PBM-8204 | 777.02 |
| 2/28/1994 | 615 | PBN-8202C | 777.56 |
| 2/28/1994 | 659 | LON-8903A | 778.29 |
| 2/28/1994 | 613 | PBN-8202A | 778.44 |
| 2/28/1994 | 657 | LON-8902A | 778.53 |
| 2/28/1994 | 660 | LON-8903B | 778.53 |
| 2/28/1994 | 614 | PBN-8202B | 778.65 |
| 2/28/1994 | 610 | PBN-8201A | 779.38 |
| 2/28/1994 | 611 | PBN-8201B | 779.42 |
| 2/28/1994 | 612 | PBN-8201C | 779.44 |
| 3/1/1994 | 623 | PBN-8205B | 776.74 |
| 3/1/1994 | 624 | PBN-8205C | 776.79 |
| 5/31/1994 | 659 | LON-8903A | 778.2 |
| 5/31/1994 | 613 | PBN-8202A | 778.31 |
| 5/31/1994 | 615 | PBN-8202C | 778.38 |
| 5/31/1994 | 660 | LON-8903B | 778.43 |
| 5/31/1994 | 614 | PBN-8202B | 778.44 |
| 5/31/1994 | 657 | LON-8902A | 778.44 |
| 5/31/1994 | 610 | PBN-8201A | 779.24 |
| 5/31/1994 | 611 | PBN-8201B | 779.27 |
| 5/31/1994 | 612 | PBN-8201C | 779.3 |
| 6/1/1994 | 623 | PBN-8205B | 776.71 |
| 6/1/1994 | 622 | PBN-8205A | 776.75 |
| 6/1/1994 | 624 | PBN-8205C | 776.78 |
| 6/1/1994 | 608 | PBM-8204 | 776.97 |
| 9/12/1994 | 659 | LON-8903A | 777.49 |
| 9/12/1994 | 613 | PBN-8202A | 777.74 |
| 9/12/1994 | 615 | PBN-8202C | 777.8 |
| 9/12/1994 | 614 | PBN-8202B | 777.85 |
| 9/12/1994 | 657 | LON-8902A | 777.99 |
| 9/12/1994 | 660 | LON-8903B | 778 |
| 9/12/1994 | 610 | PBN-8201A | 778.56 |
| 9/12/1994 | 611 | PBN-8201B | 778.71 |
| 9/12/1994 | 612 | PBN-8201C | 778.74 |
| 9/13/1994 | 622 | PBN-8205A | 776.1 |
| 9/13/1994 | 623 | PBN-8205B | 776.22 |
| 9/13/1994 | 624 | PBN-8205C | 776.26 |
| 9/13/1994 | 608 | PBM-8204 | 776.38 |
| 11/29/1994 | 608 | PBM-8204 | 775.68 |
| 11/29/1994 | 659 | LON-8903A | 776.84 |
| 11/29/1994 | 613 | PBN-8202A | 776.98 |
| 11/29/1994 | 615 | PBN-8202C | 777.04 |
| 11/29/1994 | 657 | LON-8902A | 777.07 |

| | | | |
|---|---|---|---|
| 11/29/1994 | 614 | PBN-8202B | 777.09 |
| 11/29/1994 | 660 | LON-8903B | 777.1 |
| 11/29/1994 | 610 | PBN-8201A | 778.02 |
| 11/29/1994 | 611 | PBN-8201B | 778.05 |
| 11/29/1994 | 612 | PBN-8201C | 778.05 |
| 11/30/1994 | 623 | PBN-8205B | 775.5 |
| 11/30/1994 | 622 | PBN-8205A | 775.53 |
| 11/30/1994 | 624 | PBN-8205C | 775.56 |
| 2/27/1995 | 608 | PBM-8204 | 775.08 |
| 2/27/1995 | 614 | PBN-8202B | 776.07 |
| 2/27/1995 | 659 | LON-8903A | 776.2 |
| 2/27/1995 | 613 | PBN-8202A | 776.26 |
| 2/27/1995 | 615 | PBN-8202C | 776.32 |
| 2/27/1995 | 657 | LON-8902A | 776.38 |
| 2/27/1995 | 660 | LON-8903B | 776.43 |
| 2/27/1995 | 610 | PBN-8201A | 777.28 |
| 2/27/1995 | 611 | PBN-8201B | 777.33 |
| 2/27/1995 | 612 | PBN-8201C | 777.33 |
| 2/28/1995 | 623 | PBN-8205B | 774.61 |
| 2/28/1995 | 624 | PBN-8205C | 774.66 |
| 2/28/1995 | 622 | PBN-8205A | 774.67 |
| 5/30/1995 | 608 | PBM-8204 | 774.16 |
| 5/30/1995 | 608 | PBM-8204 | 774.16 |
| 5/30/1995 | 659 | LON-8903A | 775.39 |
| 5/30/1995 | 659 | LON-8903A | 775.39 |
| 5/30/1995 | 657 | LON-8902A | 775.56 |
| 5/30/1995 | 657 | LON-8902A | 775.56 |
| 5/30/1995 | 660 | LON-8903B | 775.63 |
| 5/30/1995 | 660 | LON-8903B | 775.63 |
| 5/30/1995 | 610 | PBN-8201A | 776.38 |
| 5/30/1995 | 610 | PBN-8201A | 776.38 |
| 5/30/1995 | 611 | PBN-8201B | 776.45 |
| 5/30/1995 | 611 | PBN-8201B | 776.45 |
| 5/30/1995 | 612 | PBN-8201C | 776.47 |
| 5/30/1995 | 612 | PBN-8201C | 776.47 |
| 5/31/1995 | 623 | PBN-8205B | 773.98 |
| 5/31/1995 | 623 | PBN-8205B | 773.98 |
| 5/31/1995 | 622 | PBN-8205A | 774.02 |
| 5/31/1995 | 622 | PBN-8205A | 774.02 |
| 5/31/1995 | 624 | PBN-8205C | 774.04 |
| 5/31/1995 | 624 | PBN-8205C | 774.04 |
| 6/1/1995 | 613 | PBN-8202A | 775.52 |
| 6/1/1995 | 615 | PBN-8202C | 775.58 |
| 6/1/1995 | 614 | PBN-8202B | 775.63 |
| 8/29/1995 | 608 | PBM-8204 | 775.07 |
| 8/29/1995 | 657 | LON-8902A | 776.64 |
| 8/29/1995 | 660 | LON-8903B | 777.01 |
| 8/29/1995 | 659 | LON-8903A | 777.27 |
| 8/29/1995 | 611 | PBN-8201B | 777.51 |
| 8/29/1995 | 610 | PBN-8201A | 777.81 |
| 8/29/1995 | 612 | PBN-8201C | 777.84 |
| 8/30/1995 | 623 | PBN-8205B | 774.99 |

| | | | |
|---|---|---|---|
| 8/30/1995 | 624 | PBN-8205C | 775.25 |
| 8/30/1995 | 622 | PBN-8205A | 775.5 |
| 9/5/1995 | 615 | PBN-8202C | 776.38 |
| 9/5/1995 | 613 | PBN-8202A | 776.74 |
| 9/5/1995 | 614 | PBN-8202B | 796.14 |
| 11/28/1995 | 623 | PBN-8205B | 774.35 |
| 11/28/1995 | 624 | PBN-8205C | 774.63 |
| 11/28/1995 | 622 | PBN-8205A | 774.84 |
| 11/28/1995 | 657 | LON-8902A | 776.08 |
| 11/28/1995 | 660 | LON-8903B | 776.43 |
| 11/28/1995 | 659 | LON-8903A | 776.71 |
| 11/28/1995 | 611 | PBN-8201B | 777.53 |
| 11/28/1995 | 610 | PBN-8201A | 777.79 |
| 11/28/1995 | 612 | PBN-8201C | 777.85 |
| 12/4/1995 | 613 | PBN-8202A | 776.35 |
| 12/4/1995 | 615 | PBN-8202C | 776.55 |
| 12/4/1995 | 614 | PBN-8202B | 776.77 |
| 2/26/1996 | 612 | PBN-8201C | 758.31 |
| 2/26/1996 | 622 | PBN-8205A | 779.99 |
| 2/27/1996 | 623 | PBN-8205B | 780.84 |
| 2/27/1996 | 624 | PBN-8205C | 781.89 |
| 3/4/1996 | 613 | PBN-8202A | 754.32 |
| 3/4/1996 | 614 | PBN-8202B | 769.98 |
| 5/28/1996 | 612 | PBN-8201C | 758.04 |
| 5/28/1996 | 622 | PBN-8205A | 779.87 |
| 5/29/1996 | 623 | PBN-8205B | 780.35 |
| 5/29/1996 | 624 | PBN-8205C | 781.49 |
| 6/3/1996 | 613 | PBN-8202A | 754 |
| 6/3/1996 | 614 | PBN-8202B | 769.66 |
| 8/26/1996 | 608 | PBM-8204 | 771.87 |
| 8/26/1996 | 657 | LON-8902A | 776.5 |
| 8/26/1996 | 660 | LON-8903B | 776.89 |
| 8/26/1996 | 659 | LON-8903A | 777.11 |
| 8/26/1996 | 683 | LON-9502BR | 777.12 |
| 8/26/1996 | 611 | PBN-8201B | 777.45 |
| 8/26/1996 | 610 | PBN-8201A | 777.72 |
| 8/26/1996 | 612 | PBN-8201C | 777.77 |
| 8/27/1996 | 623 | PBN-8205B | 774.33 |
| 8/27/1996 | 624 | PBN-8205C | 774.57 |
| 8/27/1996 | 622 | PBN-8205A | 774.8 |
| 9/3/1996 | 613 | PBN-8202A | 775.84 |
| 9/3/1996 | 615 | PBN-8202C | 776.48 |
| 9/3/1996 | 614 | PBN-8202B | 776.63 |
| 11/25/1996 | 608 | PBM-8204 | 771.93 |
| 11/25/1996 | 657 | LON-8902A | 776.64 |
| 11/25/1996 | 660 | LON-8903B | 776.99 |
| 11/25/1996 | 659 | LON-8903A | 777.23 |
| 11/25/1996 | 683 | LON-9502BR | 777.23 |
| 11/25/1996 | 611 | PBN-8201B | 777.77 |
| 11/25/1996 | 610 | PBN-8201A | 778.01 |
| 11/25/1996 | 612 | PBN-8201C | 778.11 |
| 11/26/1996 | 623 | PBN-8205B | 774.33 |

| | | | |
|---|---|---|---|
| 11/26/1996 | 624 | PBN-8205C | 774.6 |
| 11/26/1996 | 622 | PBN-8205A | 774.79 |
| 12/2/1996 | 613 | PBN-8202A | 776.52 |
| 12/2/1996 | 615 | PBN-8202C | 776.71 |
| 12/2/1996 | 614 | PBN-8202B | 776.87 |
| 3/2/1999 | 608 | PBM-8204 | 765.96 |
| 3/2/1999 | 622 | PBN-8205A | 769.04 |
| 3/2/1999 | 624 | PBN-8205C | 769.99 |
| 3/2/1999 | 623 | PBN-8205B | 770.78 |
| 3/8/1999 | 660 | LON-8903B | 766.51 |
| 3/8/1999 | 659 | LON-8903A | 767.44 |
| 3/8/1999 | 639 | PBM-8909 | 772.81 |
| 3/22/1999 | 613 | PBN-8202A | 771.48 |
| 3/22/1999 | 614 | PBN-8202B | 771.56 |
| 6/21/1999 | 608 | PBM-8204 | 766.06 |
| 6/21/1999 | 622 | PBN-8205A | 769.11 |
| 6/21/1999 | 622 | PBN-8205A | 769.11 |
| 6/21/1999 | 624 | PBN-8205C | 770.05 |
| 6/21/1999 | 623 | PBN-8205B | 770.8 |
| 6/22/1999 | 639 | PBM-8909 | 772.84 |
| 6/29/1999 | 613 | PBN-8202A | 771.48 |
| 6/29/1999 | 614 | PBN-8202B | 771.55 |
| 9/20/1999 | 608 | PBM-8204 | 766.32 |
| 9/20/1999 | 613 | PBN-8202A | 771.74 |
| 9/20/1999 | 614 | PBN-8202B | 771.82 |
| 9/20/1999 | 639 | PBM-8909 | 773.1 |
| 9/22/1999 | 622 | PBN-8205A | 769.42 |
| 9/22/1999 | 622 | PBN-8205A | 769.42 |
| 9/22/1999 | 624 | PBN-8205C | 770.38 |
| 9/22/1999 | 623 | PBN-8205B | 771.1 |
| 9/27/1999 | 660 | LON-8903B | 766.53 |
| 12/14/1999 | 608 | PBM-8204 | 766.38 |
| 12/14/1999 | 622 | PBN-8205A | 769.47 |
| 12/14/1999 | 622 | PBN-8205A | 769.47 |
| 12/14/1999 | 624 | PBN-8205C | 770.44 |
| 12/14/1999 | 623 | PBN-8205B | 771.14 |
| 12/14/1999 | 639 | PBM-8909 | 773.2 |
| 12/15/1999 | 659 | LON-8903A | 922.1 |
| 12/16/1999 | 613 | PBN-8202A | 771.7 |
| 12/16/1999 | 614 | PBN-8202B | 771.78 |
| 3/8/2000 | 639 | PBM-8909 | 772.9 |
| 3/13/2000 | 660 | LON-8903B | 755.39 |
| 3/13/2000 | 608 | PBM-8204 | 766.01 |
| 3/13/2000 | 613 | PBN-8202A | 771.49 |
| 3/13/2000 | 614 | PBN-8202B | 771.6 |
| 3/13/2000 | 659 | LON-8903A | 922.14 |
| 3/14/2000 | 622 | PBN-8205A | 768.72 |
| 3/14/2000 | 622 | PBN-8205A | 768.72 |
| 3/14/2000 | 624 | PBN-8205C | 770 |
| 3/14/2000 | 623 | PBN-8205B | 770.76 |
| 6/6/2000 | 608 | PBM-8204 | 765.65 |
| 6/6/2000 | 639 | PBM-8909 | 772.42 |

| | | | |
|---|---|---|---|
| 6/6/2000 | 660 | LON-8903B | 921.99 |
| 6/6/2000 | 659 | LON-8903A | 922.14 |
| 6/12/2000 | 622 | PBN-8205A | 768.44 |
| 6/12/2000 | 624 | PBN-8205C | 769.78 |
| 6/12/2000 | 623 | PBN-8205B | 770.46 |
| 6/12/2000 | 613 | PBN-8202A | 771.16 |
| 6/12/2000 | 614 | PBN-8202B | 771.26 |
| 9/13/2000 | 613 | PBN-8202A | 772.29 |
| 9/13/2000 | 614 | PBN-8202B | 772.4 |
| 9/13/2000 | 639 | PBM-8909 | 773.13 |
| 9/18/2000 | 608 | PBM-8204 | 766.53 |
| 9/18/2000 | 622 | PBN-8205A | 769.18 |
| 9/18/2000 | 622 | PBN-8205A | 769.18 |
| 9/18/2000 | 624 | PBN-8205C | 770.53 |
| 9/18/2000 | 623 | PBN-8205B | 771.24 |
| 12/4/2000 | 639 | PBM-8909 | 773.7 |
| 12/6/2000 | 608 | PBM-8204 | 766.91 |
| 12/6/2000 | 622 | PBN-8205A | 769.96 |
| 12/6/2000 | 622 | PBN-8205A | 769.96 |
| 12/6/2000 | 624 | PBN-8205C | 770.58 |
| 12/6/2000 | 623 | PBN-8205B | 771.66 |
| 12/12/2000 | 613 | PBN-8202A | 772.83 |
| 12/12/2000 | 614 | PBN-8202B | 772.9 |
| 3/12/2001 | 613 | PBN-8202A | 772.79 |
| 3/15/2001 | 622 | PBN-8205A | 769.34 |
| 3/15/2001 | 622 | PBN-8205A | 769.34 |
| 3/15/2001 | 624 | PBN-8205C | 770.68 |
| 3/15/2001 | 623 | PBN-8205B | 771.48 |
| 3/19/2001 | 660 | LON-8903B | 767.23 |
| 3/19/2001 | 639 | PBM-8909 | 773.54 |
| 9/11/2002 | 660 | LON-8903B | 767.6 |
| 9/11/2002 | 659 | LON-8903A | 768.58 |
| 9/11/2002 | 622 | PBN-8205A | 770.62 |
| 9/11/2002 | 622 | PBN-8205A | 770.62 |
| 9/11/2002 | 623 | PBN-8205B | 772.21 |
| 9/11/2002 | 639 | PBM-8909 | 774.04 |
| 9/18/2002 | 613 | PBN-8202A | 773.49 |
| 12/3/2002 | 622 | PBN-8205A | 770.94 |
| 12/3/2002 | 622 | PBN-8205A | 770.94 |
| 12/3/2002 | 613 | PBN-8202A | 773.67 |
| 12/4/2002 | 639 | PBM-8909 | 774.68 |
| 12/9/2002 | 624 | PBN-8205C | 771.93 |
| 12/9/2002 | 623 | PBN-8205B | 772.6 |
| 12/10/2002 | 660 | LON-8903B | 767.98 |
| 12/10/2002 | 659 | LON-8903A | 768.92 |
| 3/11/2003 | 660 | LON-8903B | 767.95 |
| 3/11/2003 | 659 | LON-8903A | 768.86 |
| 3/11/2003 | 622 | PBN-8205A | 771.06 |
| 3/11/2003 | 622 | PBN-8205A | 771.06 |
| 3/11/2003 | 624 | PBN-8205C | 771.94 |
| 3/11/2003 | 623 | PBN-8205B | 772.64 |
| 3/11/2003 | 639 | PBM-8909 | 774.53 |

| | | | |
|---|---|---|---|
| 3/17/2003 | 613 | PBN-8202A | 773.75 |
| 6/10/2003 | 660 | LON-8903B | 767.71 |
| 6/10/2003 | 659 | LON-8903A | 768.62 |
| 6/10/2003 | 622 | PBN-8205A | 771 |
| 6/10/2003 | 622 | PBN-8205A | 771 |
| 6/10/2003 | 624 | PBN-8205C | 771.89 |
| 6/10/2003 | 623 | PBN-8205B | 772.59 |
| 6/11/2003 | 639 | PBM-8909 | 774.64 |
| 6/17/2003 | 613 | PBN-8202A | 773.69 |
| 9/10/2003 | 660 | LON-8903B | 767.31 |
| 9/10/2003 | 659 | LON-8903A | 768.25 |
| 9/10/2003 | 622 | PBN-8205A | 770.74 |
| 9/10/2003 | 624 | PBN-8205C | 771.62 |
| 9/10/2003 | 623 | PBN-8205B | 772.33 |
| 9/10/2003 | 613 | PBN-8202A | 773.43 |
| 9/10/2003 | 639 | PBM-8909 | 774.37 |
| 12/1/2003 | 660 | LON-8903B | 766.84 |
| 12/1/2003 | 659 | LON-8903A | 767.8 |
| 12/1/2003 | 622 | PBN-8205A | 770.35 |
| 12/1/2003 | 622 | PBN-8205A | 770.35 |
| 12/1/2003 | 624 | PBN-8205C | 771.21 |
| 12/1/2003 | 623 | PBN-8205B | 771.9 |
| 12/2/2003 | 613 | PBN-8202A | 773.03 |
| 3/9/2004 | 660 | LON-8903B | 766.3 |
| 3/9/2004 | 659 | LON-8903A | 767.24 |
| 3/9/2004 | 622 | PBN-8205A | 768.99 |
| 3/9/2004 | 622 | PBN-8205A | 768.99 |
| 3/9/2004 | 624 | PBN-8205C | 769.85 |
| 3/9/2004 | 623 | PBN-8205B | 770.51 |
| 3/9/2004 | 613 | PBN-8202A | 771.77 |
| 3/16/2004 | 639 | PBM-8909 | 772.58 |
| 4/28/2004 | 613 | PBN-8202A | 771.64 |
| 6/8/2004 | 659 | LON-8903A | 771.31 |
| 6/8/2004 | 660 | LON-8903B | 771.69 |
| 6/14/2004 | 622 | PBN-8205A | 769.59 |
| 6/14/2004 | 622 | PBN-8205A | 769.59 |
| 6/14/2004 | 624 | PBN-8205C | 769.63 |
| 6/14/2004 | 623 | PBN-8205B | 770.6 |
| 6/14/2004 | 639 | PBM-8909 | 771.76 |
| 6/16/2004 | 613 | PBN-8202A | 771.48 |
| 9/9/2004 | 613 | PBN-8202A | 772.85 |
| 9/13/2004 | 639 | PBM-8909 | 774.14 |
| 9/22/2004 | 622 | PBN-8205A | 771.11 |
| 9/22/2004 | 622 | PBN-8205A | 771.11 |
| 9/22/2004 | 623 | PBN-8205B | 771.11 |
| 9/22/2004 | 624 | PBN-8205C | 771.23 |
| 9/22/2004 | 659 | LON-8903A | 772.98 |
| 9/22/2004 | 660 | LON-8903B | 773.31 |
| 12/13/2004 | 622 | PBN-8205A | 772.22 |
| 12/13/2004 | 622 | PBN-8205A | 772.22 |
| 12/13/2004 | 623 | PBN-8205B | 772.3 |
| 12/13/2004 | 624 | PBN-8205C | 772.31 |

| | | | |
|---|---|---|---|
| 12/13/2004 | 659 | LON-8903A | 774.16 |
| 12/13/2004 | 660 | LON-8903B | 774.43 |
| 12/13/2004 | 639 | PBM-8909 | 775.46 |
| 12/15/2004 | 613 | PBN-8202A | 774.37 |
| 3/21/2005 | 659 | LON-8903A | 774.61 |
| 3/21/2005 | 660 | LON-8903B | 774.98 |
| 3/21/2005 | 639 | PBM-8909 | 775.96 |
| 3/22/2005 | 622 | PBN-8205A | 772.75 |
| 3/22/2005 | 622 | PBN-8205A | 772.75 |
| 3/22/2005 | 623 | PBN-8205B | 772.83 |
| 3/22/2005 | 624 | PBN-8205C | 772.91 |
| 3/22/2005 | 613 | PBN-8202A | 774.85 |
| 6/21/2005 | 659 | LON-8903A | 773.91 |
| 6/21/2005 | 660 | LON-8903B | 774.23 |
| 6/22/2005 | 622 | PBN-8205A | 771.52 |
| 6/22/2005 | 622 | PBN-8205A | 771.52 |
| 6/22/2005 | 623 | PBN-8205B | 771.6 |
| 6/22/2005 | 624 | PBN-8205C | 771.65 |
| 6/22/2005 | 639 | PBM-8909 | 775.33 |
| 6/27/2005 | 613 | PBN-8202A | 774.05 |
| 9/26/2005 | 659 | LON-8903A | 773.31 |
| 9/26/2005 | 660 | LON-8903B | 773.63 |
| 9/28/2005 | 622 | PBN-8205A | 770.97 |
| 9/28/2005 | 622 | PBN-8205A | 770.97 |
| 9/28/2005 | 623 | PBN-8205B | 771.02 |
| 9/28/2005 | 624 | PBN-8205C | 771.1 |
| 9/28/2005 | 613 | PBN-8202A | 773.5 |
| 9/28/2005 | 615 | PBN-8202C | 773.59 |
| 12/14/2005 | 622 | PBN-8205A | 770.36 |
| 3/27/2006 | 622 | PBN-8205A | 769.42 |
| 3/27/2006 | 622 | PBN-8205A | 769.42 |
| 3/27/2006 | 623 | PBN-8205B | 769.5 |
| 3/27/2006 | 624 | PBN-8205C | 769.53 |
| 3/27/2006 | 613 | PBN-8202A | 771.93 |
| 3/27/2006 | 615 | PBN-8202C | 772.08 |
| 3/28/2006 | 659 | LON-8903A | 771.82 |
| 3/28/2006 | 660 | LON-8903B | 772.13 |
| 3/28/2006 | 639 | PBM-8909 | 773.2 |
| 9/25/2006 | 622 | PBN-8205A | 769.46 |
| 9/25/2006 | 622 | PBN-8205A | 769.46 |
| 9/25/2006 | 623 | PBN-8205B | 769.51 |
| 9/25/2006 | 624 | PBN-8205C | 769.58 |
| 9/25/2006 | 613 | PBN-8202A | 771.25 |
| 9/25/2006 | 615 | PBN-8202C | 771.39 |
| 10/10/2006 | 659 | LON-8903A | 771.09 |
| 10/10/2006 | 660 | LON-8903B | 771.49 |
| 3/28/2007 | 622 | PBN-8205A | 768.84 |
| 3/28/2007 | 623 | PBN-8205B | 768.9 |
| 3/28/2007 | 624 | PBN-8205C | 768.98 |
| 3/28/2007 | 613 | PBN-8202A | 770.85 |
| 3/28/2007 | 615 | PBN-8202C | 770.97 |
| 4/4/2007 | 659 | LON-8903A | 771.01 |

| | | | |
|---|---|---|---|
| 4/4/2007 | 660 | LON-8903B | 771.31 |
| 9/4/2007 | 613 | PBN-8202A | 771.47 |
| 9/4/2007 | 615 | PBN-8202C | 771.62 |
| 9/5/2007 | 624 | PBN-8205C | 764.81 |
| 9/5/2007 | 622 | PBN-8205A | 769.69 |
| 9/5/2007 | 623 | PBN-8205B | 769.78 |
| 9/11/2007 | 659 | LON-8903A | 771.66 |
| 9/11/2007 | 660 | LON-8903B | 771.86 |
| 3/31/2008 | 622 | PBN-8205A | 772.02 |
| 3/31/2008 | 622 | PBN-8205A | 772.02 |
| 3/31/2008 | 623 | PBN-8205B | 772.12 |
| 3/31/2008 | 613 | PBN-8202A | 773.85 |
| 3/31/2008 | 615 | PBN-8202C | 773.97 |
| 4/2/2008 | 659 | LON-8903A | 773.88 |
| 4/2/2008 | 660 | LON-8903B | 774.25 |
| 4/8/2008 | 373 | PBM-0007 | 773.39 |
| 4/8/2008 | 370 | PBM-0004 | 773.62 |
| 4/8/2008 | 374 | PBM-0008 | 773.64 |
| 4/8/2008 | 369 | PBM-0003 | 773.7 |
| 4/8/2008 | 368 | PBM-0002 | 773.73 |
| 4/8/2008 | 372 | PBM-0006 | 773.77 |
| 4/8/2008 | 371 | PBM-0005 | 773.83 |
| 4/8/2008 | 367 | PBM-0001 | 773.95 |
| 9/29/2008 | 659 | LON-8903A | 781.46 |
| 9/29/2008 | 660 | LON-8903B | 781.75 |
| 10/1/2008 | 622 | PBN-8205A | 779.42 |
| 10/1/2008 | 622 | PBN-8205A | 779.42 |
| 10/1/2008 | 623 | PBN-8205B | 779.53 |
| 4/1/2009 | 659 | LON-8903A | 780.53 |
| 4/1/2009 | 660 | LON-8903B | 780.83 |
| 4/2/2009 | 623 | PBN-8205B | 778.7 |
| 4/2/2009 | 623 | PBN-8205B | 778.7 |
| 4/9/2009 | 369 | PBM-0003 | 777.15 |
| 4/9/2009 | 372 | PBM-0006 | 778.49 |
| 4/9/2009 | 368 | PBM-0002 | 778.56 |
| 4/9/2009 | 371 | PBM-0005 | 778.73 |
| 4/9/2009 | 526 | PBM-9803 | 778.79 |
| 4/9/2009 | 367 | PBM-0001 | 778.8 |
| 4/9/2009 | 363 | PBM-9903 | 778.97 |
| 4/9/2009 | 362 | PBM-9902 | 779.01 |
| 4/9/2009 | 360 | PBM-9801 | 779.46 |
| 4/9/2009 | 361 | PBM-9901 | 779.65 |
| 4/9/2009 | 370 | PBM-0004 | 780.11 |
| 4/9/2009 | 374 | PBM-0008 | 780.12 |
| 4/9/2009 | 373 | PBM-0007 | 780.24 |
| 4/9/2009 | 373 | PBM-0007 | 780.24 |
| 4/14/2009 | 613 | PBN-8202A | 777.73 |
| 4/14/2009 | 622 | PBN-8205A | 778.42 |
| 4/14/2009 | 622 | PBN-8205A | 778.42 |
| 4/14/2009 | 615 | PBN-8202C | 778.5 |
| 4/14/2009 | 624 | PBN-8205C | 778.58 |
| 4/14/2009 | 614 | PBN-8202B | 779.15 |

| | | | |
|---|---|---|---|
| 9/24/2009 | 622 | PBN-8205A | 776.47 |
| 9/24/2009 | 622 | PBN-8205A | 776.47 |
| 9/24/2009 | 623 | PBN-8205B | 776.51 |
| 9/24/2009 | 624 | PBN-8205C | 776.59 |
| 9/29/2009 | 659 | LON-8903A | 778.21 |
| 3/25/2010 | 615 | PBN-8202C | 774.31 |
| 3/25/2010 | 368 | PBM-0002 | 774.35 |
| 3/25/2010 | 371 | PBM-0005 | 774.47 |
| 3/25/2010 | 367 | PBM-0001 | 774.53 |
| 3/25/2010 | 360 | PBM-9801 | 775.25 |
| 3/25/2010 | 374 | PBM-0008 | 776.08 |
| 3/29/2010 | 659 | LON-8903A | 776.14 |
| 4/1/2010 | 622 | PBN-8205A | 774.3 |
| 4/1/2010 | 623 | PBN-8205B | 774.38 |
| 4/1/2010 | 624 | PBN-8205C | 774.42 |
| 9/21/2010 | 368 | PBM-0002 | 773.5 |
| 9/21/2010 | 615 | PBN-8202C | 773.55 |
| 9/21/2010 | 371 | PBM-0005 | 773.72 |
| 9/21/2010 | 367 | PBM-0001 | 773.79 |
| 9/21/2010 | 360 | PBM-9801 | 774.55 |
| 9/21/2010 | 374 | PBM-0008 | 775.14 |
| 9/28/2010 | 659 | LON-8903A | 775.58 |
| 9/28/2010 | 660 | LON-8903B | 775.89 |
| 10/4/2010 | 622 | PBN-8205A | 773.56 |
| 10/4/2010 | 622 | PBN-8205A | 773.56 |
| 10/4/2010 | 624 | PBN-8205C | 773.69 |
| 10/6/2010 | 623 | PBN-8205B | 773.73 |
| 3/16/2011 | 368 | PBM-0002 | 775.23 |
| 3/16/2011 | 615 | PBN-8202C | 775.3 |
| 3/16/2011 | 371 | PBM-0005 | 775.46 |
| 3/16/2011 | 367 | PBM-0001 | 775.46 |
| 3/16/2011 | 367 | PBM-0001 | 775.46 |
| 3/16/2011 | 360 | PBM-9801 | 776.26 |
| 3/16/2011 | 374 | PBM-0008 | 776.77 |
| 3/29/2011 | 622 | PBN-8205A | 775.03 |
| 3/29/2011 | 622 | PBN-8205A | 775.03 |
| 3/29/2011 | 623 | PBN-8205B | 775.12 |
| 3/29/2011 | 624 | PBN-8205C | 775.15 |
| 3/30/2011 | 659 | LON-8903A | 777.18 |
| 3/30/2011 | 660 | LON-8903B | 777.52 |
| 9/27/2011 | 368 | PBM-0002 | 775.23 |
| 9/27/2011 | 615 | PBN-8202C | 775.24 |
| 9/27/2011 | 371 | PBM-0005 | 775.42 |
| 9/27/2011 | 367 | PBM-0001 | 775.52 |
| 9/27/2011 | 367 | PBM-0001 | 775.52 |
| 9/27/2011 | 360 | PBM-9801 | 776.25 |
| 9/27/2011 | 374 | PBM-0008 | 776.81 |
| 9/27/2011 | 659 | LON-8903A | 777.23 |
| 9/27/2011 | 660 | LON-8903B | 777.56 |
| 9/28/2011 | 622 | PBN-8205A | 775.09 |
| 9/28/2011 | 622 | PBN-8205A | 775.09 |
| 9/28/2011 | 623 | PBN-8205B | 775.15 |

| | | | |
|---|---|---|---|
| 9/28/2011 | 624 | PBN-8205C | 775.21 |
| 3/20/2012 | 368 | PBM-0002 | 774.72 |
| 3/20/2012 | 615 | PBN-8202C | 774.77 |
| 3/20/2012 | 371 | PBM-0005 | 774.9 |
| 3/20/2012 | 367 | PBM-0001 | 774.97 |
| 3/20/2012 | 367 | PBM-0001 | 774.97 |
| 3/20/2012 | 360 | PBM-9801 | 775.68 |
| 3/20/2012 | 374 | PBM-0008 | 776.3 |
| 3/20/2012 | 659 | LON-8903A | 776.74 |
| 3/20/2012 | 660 | LON-8903B | 777.06 |
| 3/27/2012 | 622 | PBN-8205A | 774.67 |
| 3/27/2012 | 622 | PBN-8205A | 774.67 |
| 3/27/2012 | 623 | PBN-8205B | 774.77 |
| 3/27/2012 | 624 | PBN-8205C | 774.78 |
| 3/27/2012 | 612 | PBN-8201C | 777.96 |
| 3/27/2012 | 610 | PBN-8201A | 777.98 |
| 9/24/2012 | 368 | PBM-0002 | 773.01 |
| 9/24/2012 | 615 | PBN-8202C | 773.09 |
| 9/24/2012 | 371 | PBM-0005 | 773.22 |
| 9/24/2012 | 367 | PBM-0001 | 773.32 |
| 9/24/2012 | 367 | PBM-0001 | 773.32 |
| 9/24/2012 | 360 | PBM-9801 | 774.03 |
| 9/24/2012 | 374 | PBM-0008 | 774.62 |
| 9/24/2012 | 659 | LON-8903A | 775.05 |
| 9/24/2012 | 660 | LON-8903B | 775.44 |
| 9/25/2012 | 622 | PBN-8205A | 772.87 |
| 9/25/2012 | 622 | PBN-8205A | 772.87 |
| 9/25/2012 | 623 | PBN-8205B | 772.89 |
| 9/25/2012 | 624 | PBN-8205C | 772.97 |
| 3/19/2013 | 615 | PBN-8202C | 772.15 |
| 3/19/2013 | 368 | PBM-0002 | 772.25 |
| 3/19/2013 | 371 | PBM-0005 | 772.31 |
| 3/19/2013 | 367 | PBM-0001 | 772.89 |
| 3/19/2013 | 367 | PBM-0001 | 772.89 |
| 3/19/2013 | 360 | PBM-9801 | 772.91 |
| 3/19/2013 | 374 | PBM-0008 | 773.9 |
| 3/25/2013 | 622 | PBN-8205A | 771.65 |
| 3/25/2013 | 622 | PBN-8205A | 771.65 |
| 3/25/2013 | 623 | PBN-8205B | 771.75 |
| 3/25/2013 | 624 | PBN-8205C | 771.81 |
| 4/3/2013 | 659 | LON-8903A | 773.8 |
| 4/3/2013 | 660 | LON-8903B | 774.13 |
| 9/23/2013 | 367 | PBM-0001 | 771.41 |
| 9/23/2013 | 367 | PBM-0001 | 771.41 |
| 9/23/2013 | 368 | PBM-0002 | 772.26 |
| 9/23/2013 | 765 | PBM-1202 | 772.27 |
| 9/23/2013 | 615 | PBN-8202C | 772.29 |
| 9/23/2013 | 371 | PBM-0005 | 772.33 |
| 9/23/2013 | 360 | PBM-9801 | 772.95 |
| 9/23/2013 | 659 | LON-8903A | 773.88 |
| 9/23/2013 | 374 | PBM-0008 | 773.95 |
| 9/23/2013 | 660 | LON-8903B | 774.28 |

| | | | |
|---|---|---|---|
| 9/24/2013 | 622 | PBN-8205A | 771.74 |
| 9/24/2013 | 622 | PBN-8205A | 771.74 |
| 9/24/2013 | 623 | PBN-8205B | 771.82 |
| 9/24/2013 | 624 | PBN-8205C | 771.86 |
| 10/15/2013 | 601 | S1117 | 771.98 |
| 10/15/2013 | 608 | PBM-8204 | 772.3 |
| 10/16/2013 | 769 | PBN-1301C | 773.74 |
| 10/16/2013 | 767 | PBN-1301A | 773.82 |
| 10/16/2013 | 768 | PBN-1301B | 773.86 |
| 10/16/2013 | 768 | PBN-1301B | 773.86 |
| 10/16/2013 | 657 | LON-8902A | 774.24 |
| 10/16/2013 | 683 | LON-9502BR | 774.32 |
| 10/16/2013 | 656 | LOM-8901 | 774.75 |
| 10/16/2013 | 611 | PBN-8201B | 775.05 |
| 10/16/2013 | 610 | PBN-8201A | 775.21 |
| 10/16/2013 | 639 | PBM-8909 | 775.29 |
| 10/16/2013 | 612 | PBN-8201C | 775.45 |
| 10/28/2013 | 613 | PBN-8202A | 772.19 |
| 10/28/2013 | 613 | PBN-8202A | 772.19 |
| 10/28/2013 | 372 | PBM-0006 | 772.25 |
| 10/28/2013 | 764 | PBM-1201 | 772.33 |
| 10/28/2013 | 526 | PBM-9803 | 772.36 |
| 10/28/2013 | 614 | PBN-8202B | 772.37 |
| 10/28/2013 | 363 | PBM-9903 | 772.52 |
| 10/28/2013 | 362 | PBM-9902 | 772.65 |
| 10/28/2013 | 361 | PBM-9901 | 773.2 |
| 10/28/2013 | 370 | PBM-0004 | 774.03 |
| 10/28/2013 | 373 | PBM-0007 | 774.1 |
| 10/28/2013 | 369 | PBM-0003 | 774.12 |

# Data Tables Not Relevant To Case Closure Request

## A.8. Other

Long term groundwater monitoring will continue for the entire site, including wells located within Parcel H. Currently, there is no natural attenuation data available.

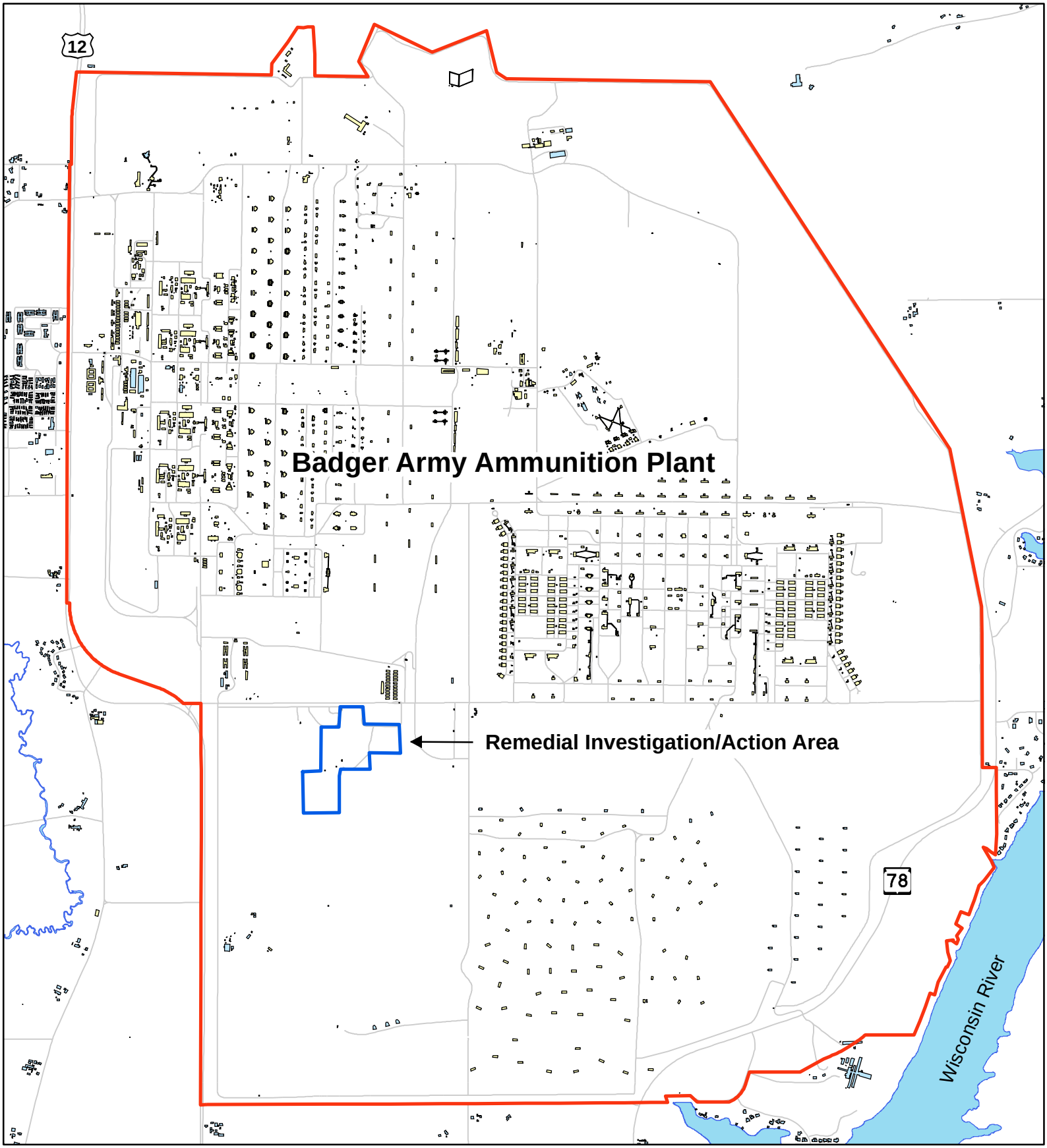


**Legend**

- Badger Army Ammunition Plant Boundary
- Parcel H - Remedial Investigation/ Action Area
- Paved Road
- Existing Building
- Former Building Footprint

Figure B.1.a

Site Location Map
Parcel H - Wisconsin Department of Natural Resources Closure Report
Badger Army Ammunition Plant

1 inch = 2,500 feet

0 3,500 7,000 Feet

D:\GIS_Projects\WDNR Closure Request\H\
GIS Registry\Figure B1a_Site Loc

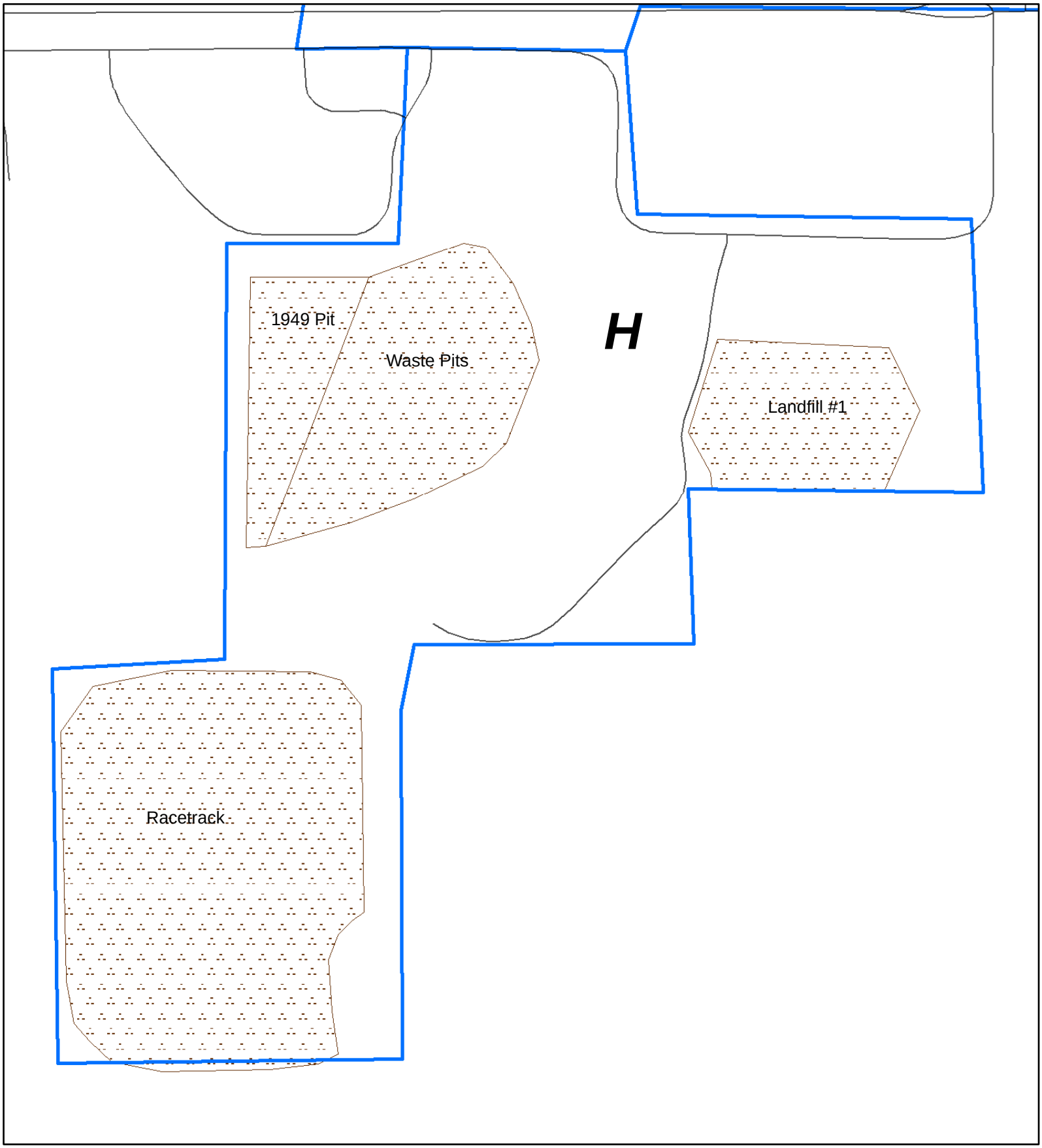


Figure B.1.b

Detailed Site Map
Parcel H - Wisconsin Department of Natural Resources
Closure Report
Badger Army Ammunition Plant

**Legend**

- Waste Disposal Areas
- Parcel Boundary
- Road

1 inch = 260 feet

0 400 800 Feet

D:\GIS_Projects\WDNR Closure Request\H\GIS Registry\Figure B1b Detailed Site Map.mxd

# Figure B.1.c
# RR Site Map

## Legend

- Open Site (ongoing cleanup)
- Open Site Boundary
- Closed Site (completed cleanup)
- Closed Site Boundary
- Airport
- 2010 Air Photos (WROC)
- Cities
- Villages

0.4 0 0.21 0.4 Miles

NAD_1983_HARN_Wisconsin_TM

1: 13,022

© Latitude Geographics Group Ltd.

DISCLAIMER: The information shown on these maps has been obtained from various sources, and are of varying age, reliability and resolution. These maps are not intended to be used for navigation, nor are these maps an authoritative source of information about legal land ownership or public access. No warranty, expressed or implied, is made aregarding accuracy, applicability for a particular use, completemenss, or legality of the information depicted on this map. For more information, see the DNR Legal Notices web page: http://dnr.wi.gov/org/legal/

***Note: Not all sites are mapped.***

## Notes

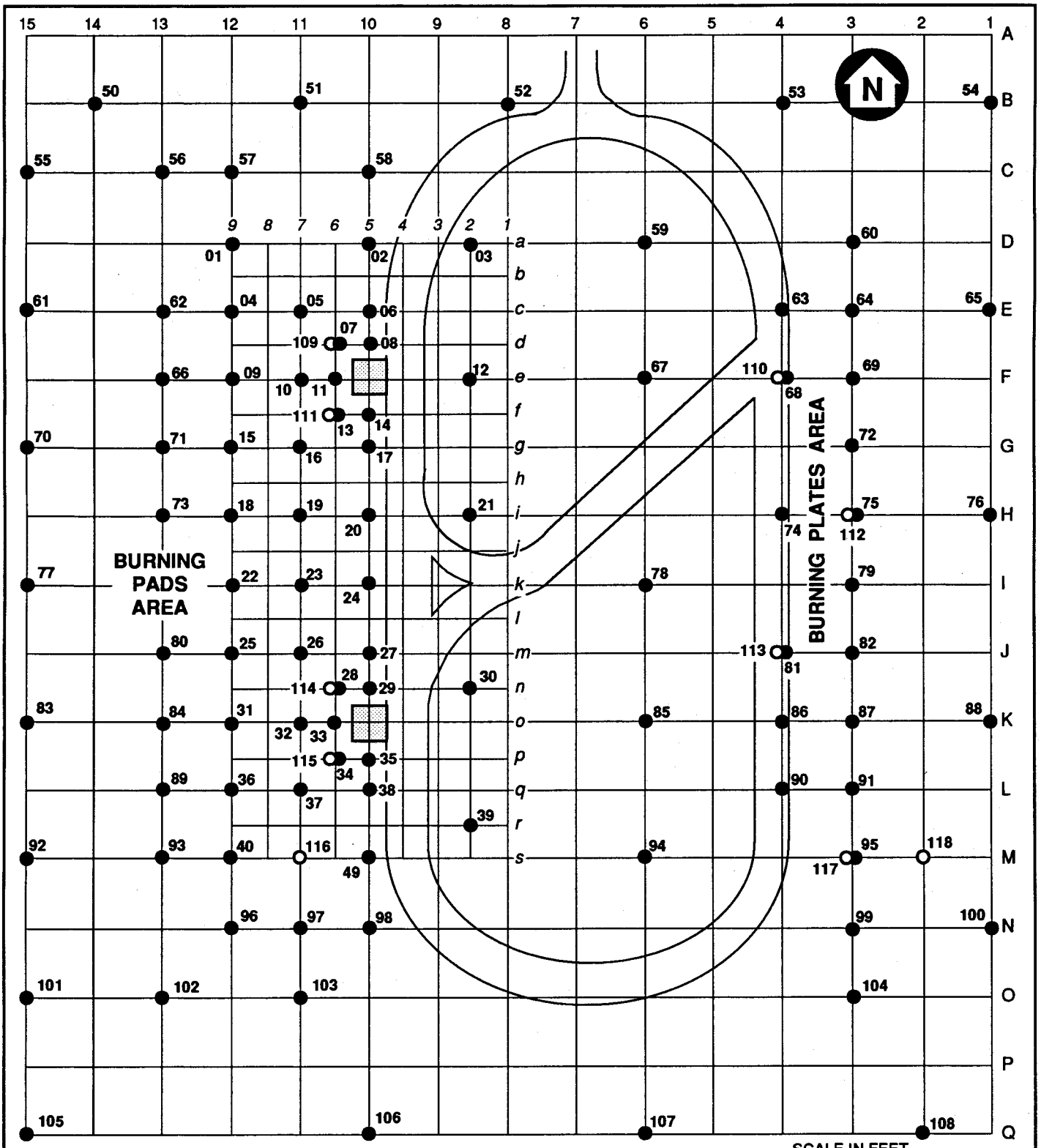


**LEGEND**

01 ● SURFACE SOIL SAMPLE LOCATION (PBS-91-01)

109 ○ SUBSURFACE SOIL SAMPLE LOCATION (PBS-91-109)

▒ APPROXIMATE SIZE OF CONCRETE BURNING PADS

**NOTE:** SAMPLE LOCATIONS 41 THROUGH 48 ARE LOCATED OFF THE GRID IN THE CONTAMINATED WASTE AREA (FIGURE 6-6).

**SOURCE:** MODIFIED FROM FIGURE 4-12 OF TSAI ET AL., 1988.

**FIGURE 6-5**
**SURFACE SOIL SAMPLE LOCATIONS AT THE RACETRACK PROPELLANT BURNING GROUND REMEDIAL INVESTIGATION BADGER ARMY AMMUNITION PLANT**

ABB Environmental Services, Inc.

9208064D 2345

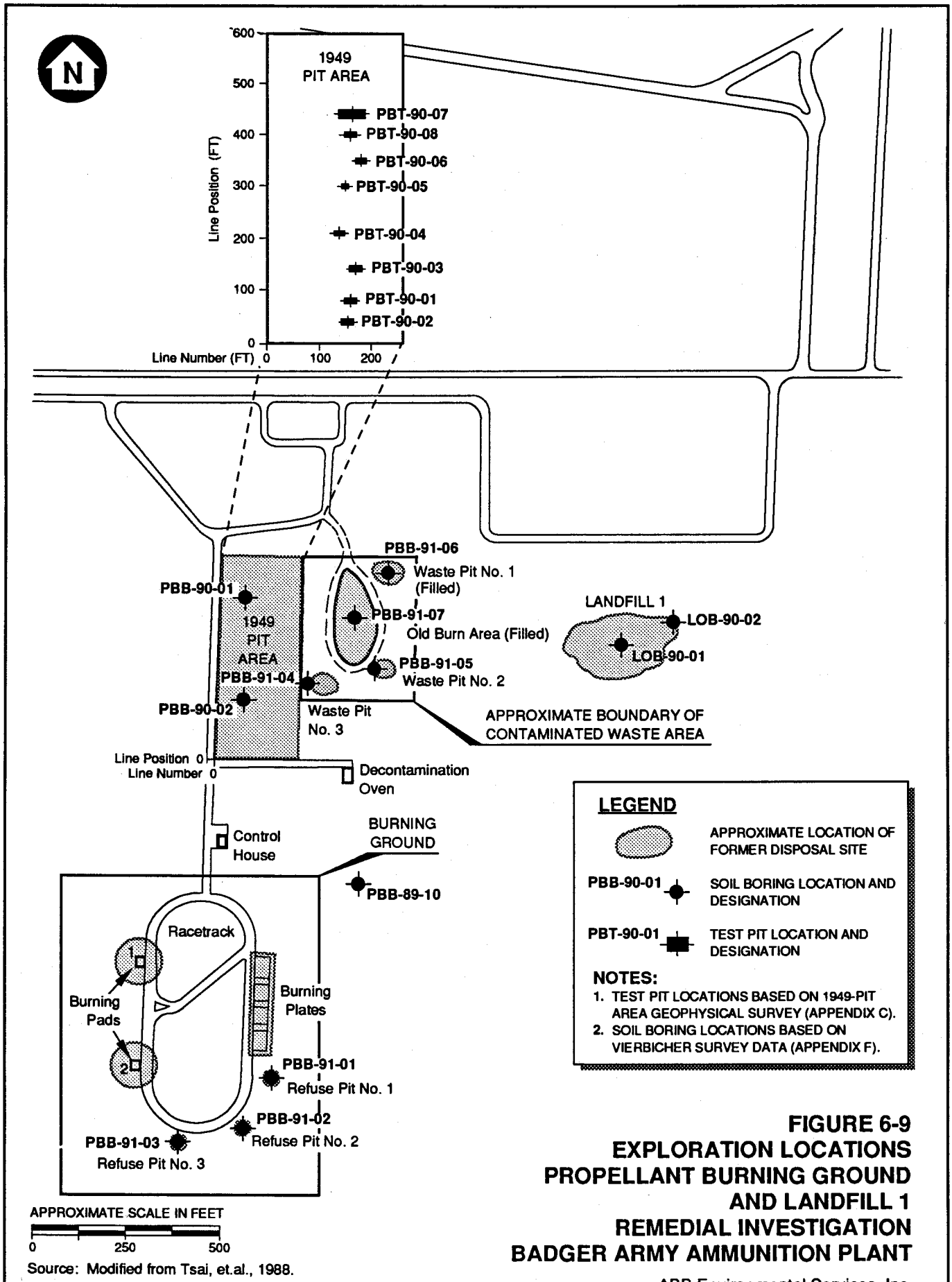


Source: Modified from Tsai, et.al., 1988.

**FIGURE 6-9**
**EXPLORATION LOCATIONS**
**PROPELLANT BURNING GROUND**
**AND LANDFILL 1**
**REMEDIAL INVESTIGATION**
**BADGER ARMY AMMUNITION PLANT**

ABB Environmental Services, Inc.

9208002D1 3

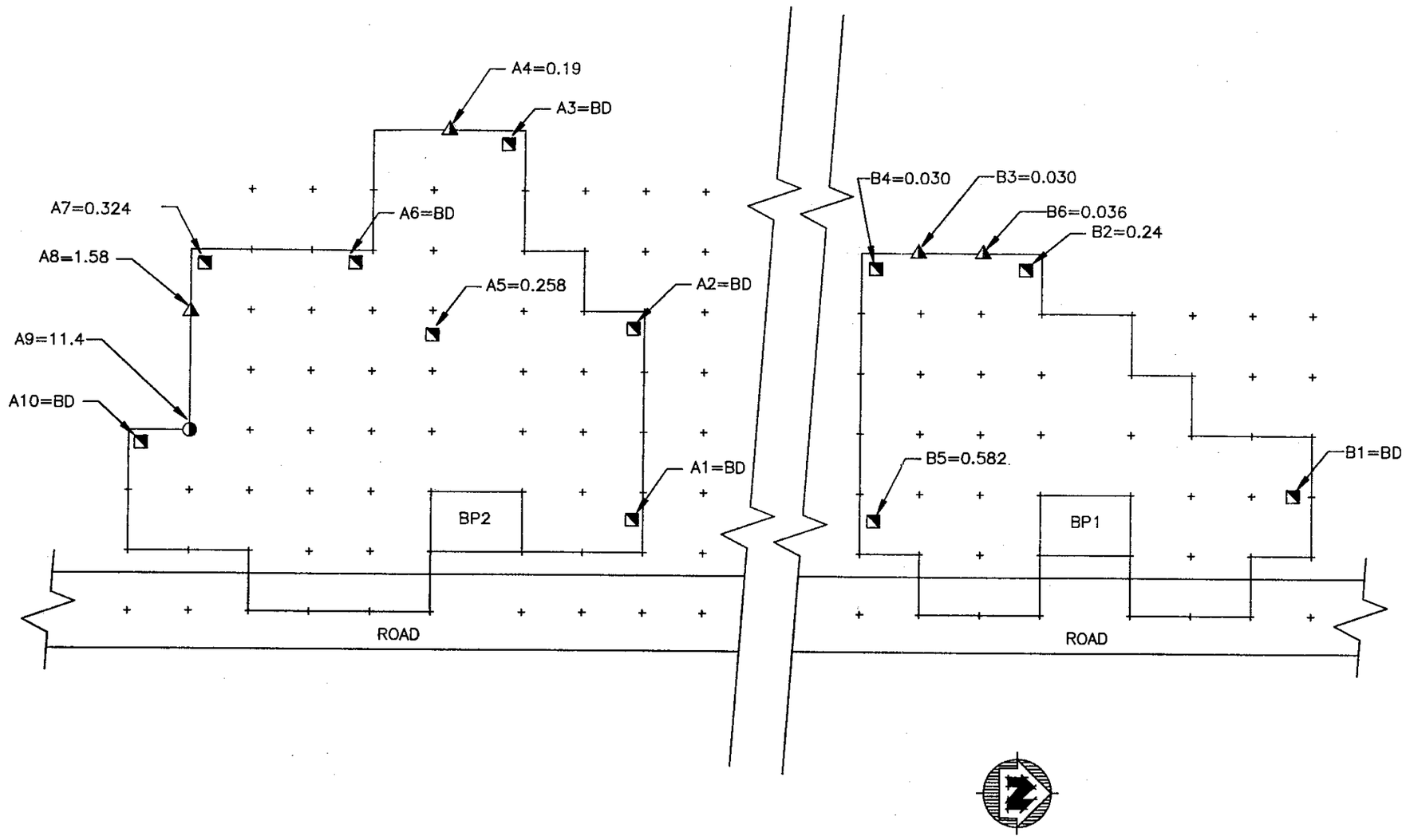


CONFIRMATION SOIL SAMPLING RESULTS AFTER 6" REMOVAL

MSA
MID-STATE ASSOCIATES, INC.
Engineers · Architects · Planners · Surveyors · Scientists
1230 South Blvd.
Baraboo, Wisconsin
53913
608·356·2771

## LEGEND

| | |
|---|---|
| + | REMEDIAL INVESTIGATION TCLP ANALYSIS SITES |
| ◪ | BOTTOM SAMPLES COLLECTED AFTER 6" OF SOIL REMOVED (PASSED). TCLP ANALYSIS VALUES ARE mg/l |
| ◭ | PERIMETER SAMPLES COLLECTED AFTER 6" OF SOIL REMOVED (PASSED). TCLP ANALYSIS VALUES ARE mg/l |
| ◑ | PERIMETER SAMPLES COLLECTED AFTER 6" OF SOIL REMOVED (FAILED). TCLP ANALYSIS VALUES ARE mg/l |
| BP1 | CONCRETE BURN PAD 1 |
| BP2 | CONCRETE BURN PAD 2 |

BD = BELOW DETECTION LIMIT OF 0.020 mg/l

40 0 40
SCALE IN FEET

**FIGURE 3**
**THERMAL TREATMENT UNIT CLOSURE**
BADGER ARMY AMMUNITION PLANT
SAUK COUNTY, WISCONSIN
MSA PROJECT NO. 212196

W:\DRAW\ENVR\REMED\212196RD

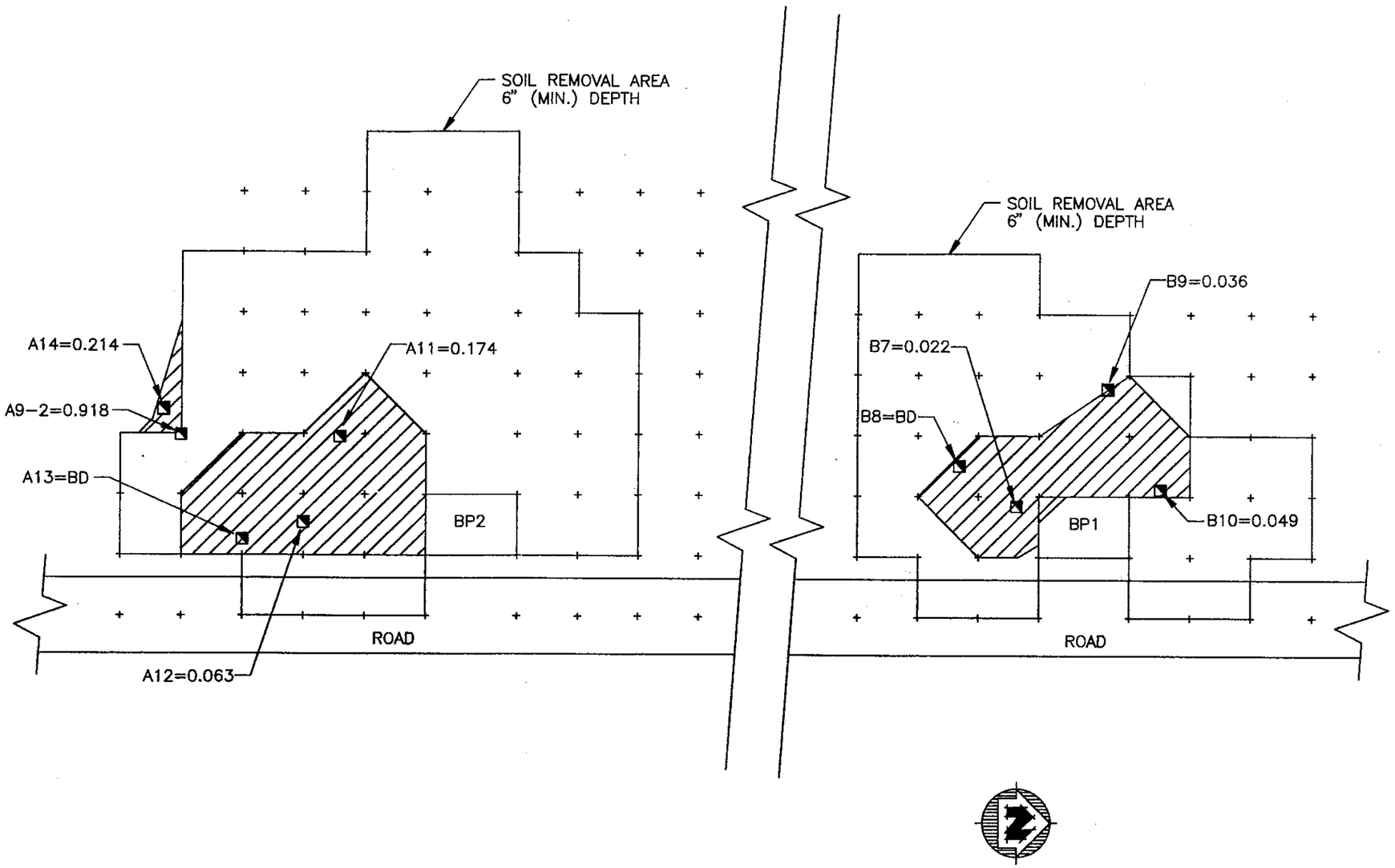


CONFIRMATION SOIL SAMPLING TCLP RESULTS AFTER 12" REMOVAL

MSA
1230 South Blvd.
Baraboo, Wisconsin
53913
608·356·2771
MID-STATE ASSOCIATES, INC.
Engineers·Architects·Planners·Surveyors·Scientists

LEGEND

+ REMEDIAL INVESTIGATION TCLP ANALYSIS SITES

BOTTOM SAMPLES COLLECTED AFTER 12" OF SOIL REMOVED (PASSED) TCLP ANALYSIS VALUES ARE mg/l

BP1 CONCRETE BURN PAD 1

BP2 CONCRETE BURN PAD 2

SOIL REMOVAL TO 12" (MIN.) DEPTH

BD = BELOW DETECTION LIMIT OF 0.020 mg/l

40 0 40
SCALE IN FEET

**FIGURE 4**
**THERMAL TREATMENT UNIT CLOSURE**
BADGER ARMY AMMUNITION PLANT
SAUK COUNTY, WISCONSIN

MSA PROJECT NO. 212196

W:\DRAW\ENVR\REMED\212196RE

# Figures Not Relevant To Case Closure Request

## B.2.c. Pre/Post Remaining Soil Contamination

There were no soil samples remaining, following remedial activities, which contained concentrations of contaminants above the Cleanup Objectives in Parcel H.

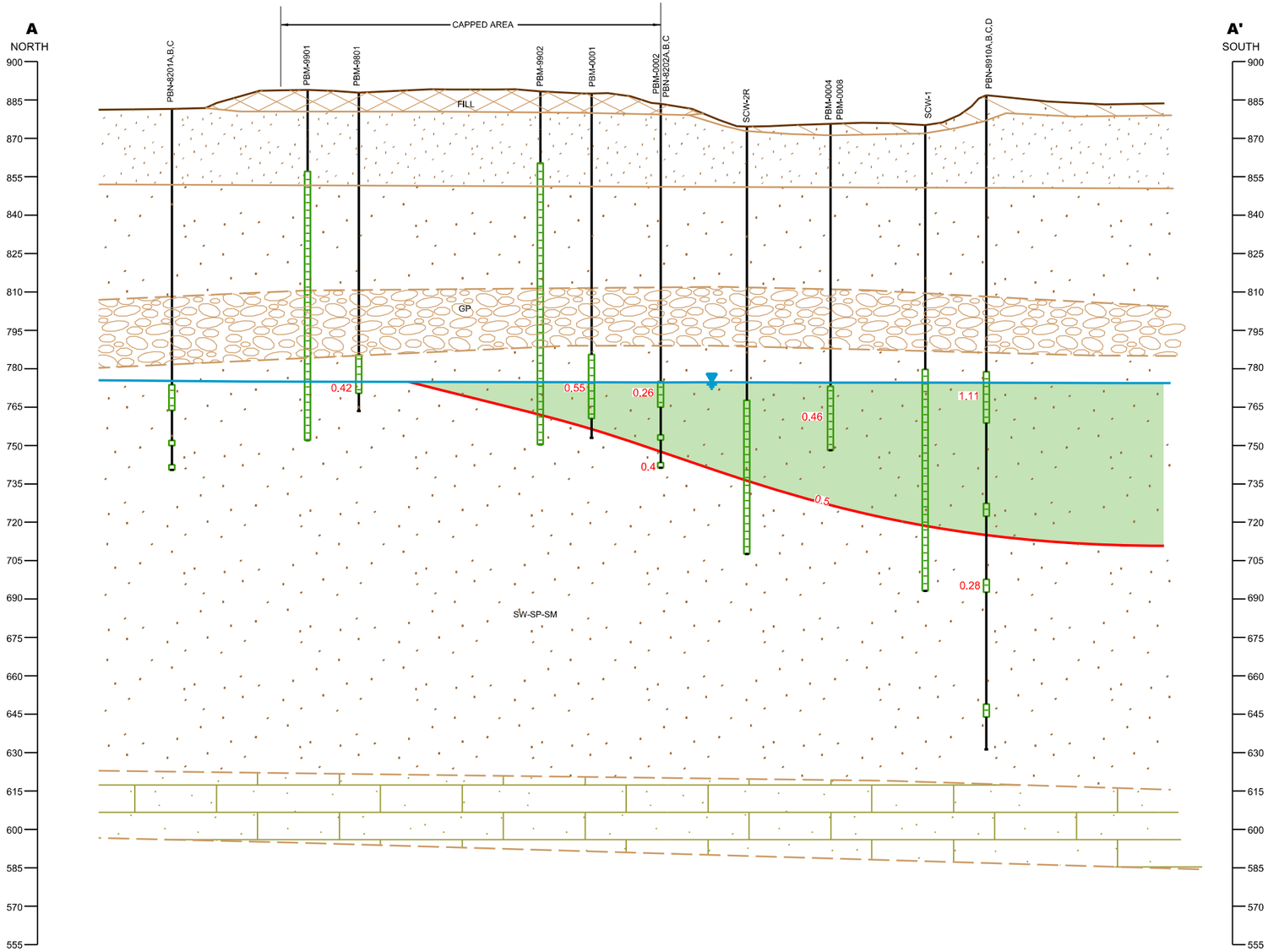


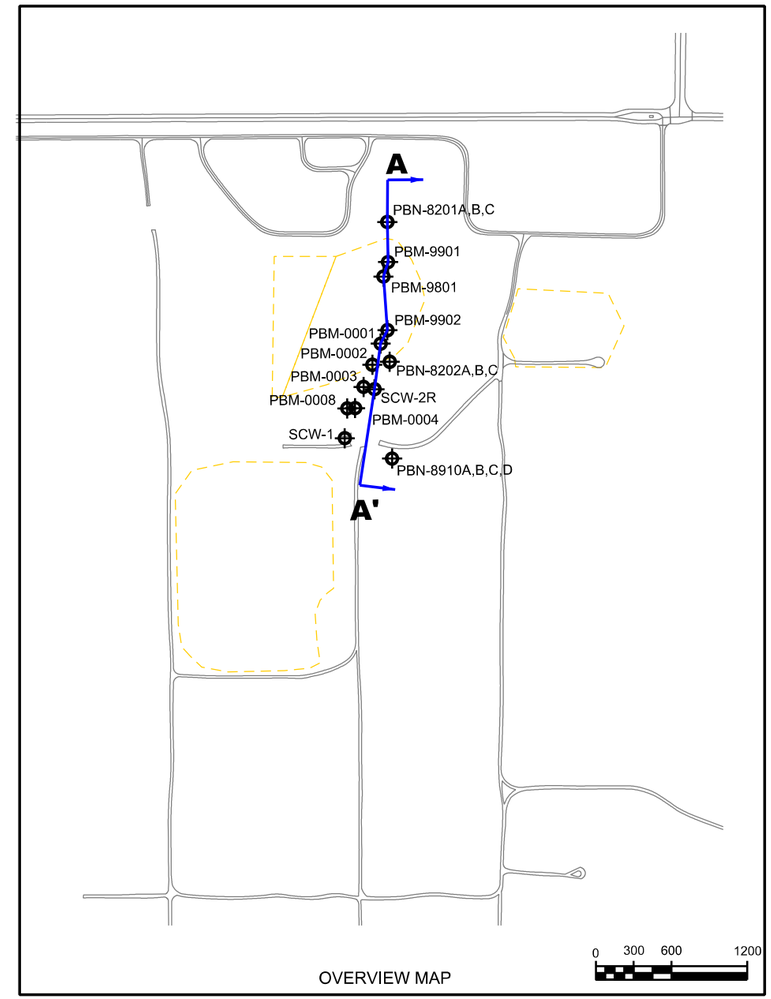


NOTES:
1. PROFILES ARE BASED ON AN INTERPRETATION OF AVAILABLE SUBSURFACE DATA AND THE APRIL 1993 REMEDIAL INVESTIGATION REPORT PREPARED BY ABB ENVIRONMENTAL SERVICES, INC.
2. MSL - MEAN SEA LEVEL
3. CARBON TETRACHLORIDE CONCENTRATIONS ARE BASED ON ANALYTICAL DATA COLLECTED DURING 9/10 AND 10/10.
4. GROUNDWATER FLOW IS APPROXIMATELY PERPENDICULAR TO THE CROSS SECTION.
5. µg/l - MICROGRAMS PER LITER
6. GROUNDWATER ANALYTICAL DATA WAS NOT AVAILABLE FOR ALL WELLS; NOT EVERY WELL IS ROUTINELY SAMPLED.

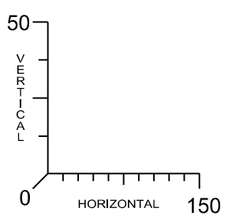


SCALE IN FEET

VERTICAL EXAGGERATION 1:3

LEGEND

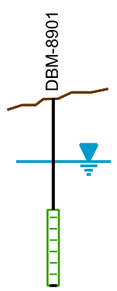


WELL DESIGNATION; SUFFIXES REFER TO WATER TABLE WELL (A) AND PIEZOMETER (B,C,D,E)

GROUND SURFACE

WATER TABLE ELEVATION

SCREENED INTERVAL

BOTTOM OF EXPLORATION

GEOLOGIC DESCRIPTIONS:

| | | | |
|---|---|---|---|
| FILL | FILL MATERIAL AND CAP OVER PROPELLANT BURNING GROUND WASTE PITS | GP | GRAVEL, POORLY GRADED, GLACIAL OUTWASH |
| ML-SM | SILT AND SILTY SAND MIXTURE, LOESS | GW | GRAVEL, WELL GRADED, GLACIAL OUTWASH |
| SM-SP | SAND, MIXTURE OF VARYING GRAIN SIZES, GLACIAL TILL | GP-GW | GRAVEL, MIXTURE, GLACIAL OUTWASH |
| SW-SP-SM | SAND, MIXTURE OF VARYING GRAIN SIZES, GLACIAL OUTWASH | | BEDROCK, EAU CLAIRE FORMATION (DOLOMITE) |
| ML | SILT, GLACIAL OUTWASH | | BEDROCK, EAU CLAIRE FORMATION (SANDSTONE) |

Figure B.3.a

Parcel H - WDNR Closure Report

FIGURE 6

CARBON TETRACHLORIDE GEOLOGIC CROSS SECTION A-A'

PROPELLANT BURNING GROUND
IRM SHUTDOWN PLAN
BADGER ARMY AMMUNITION PLANT

BTS
BADGER TECHNICAL SERVICES

# Figures Not Relevant To Case Closure Request

## B.3.b. Groundwater Isoconcentrations

The source of the groundwater contamination in Parcel H is the Propellant Burning Ground (PBG) area. Closure of the PBG groundwater plume is not part of the Parcel H closure request.

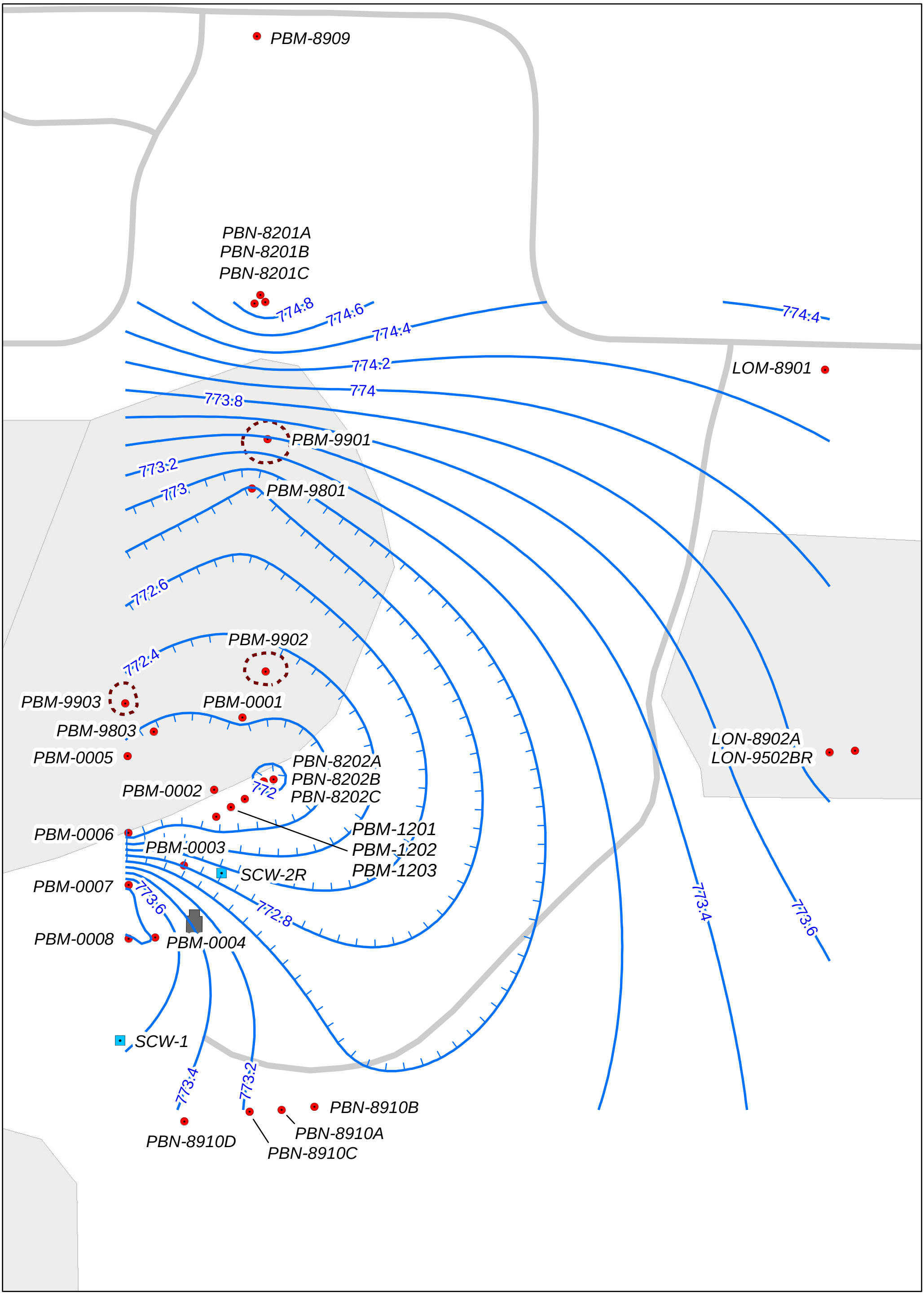


**Legend**

**Linetype**

- 0.25 ft Contour
- 0.25 ft Depression Contour
- Monitoring Well
- Extraction Well
- Waste Pit
- Building
- Road
- Capped Area

Figure B.3.c

Groundwater Contour Map - June 4, 2013
IRM Shutdown Plan
Badger Army Ammunition Plant

1 inch = 100 feet

0 110 220 Feet

D:\GIS_Projects\MIRM-IRM\IRM ShutDown Plan\6-4-13 Groundwater Contour Map.mxd

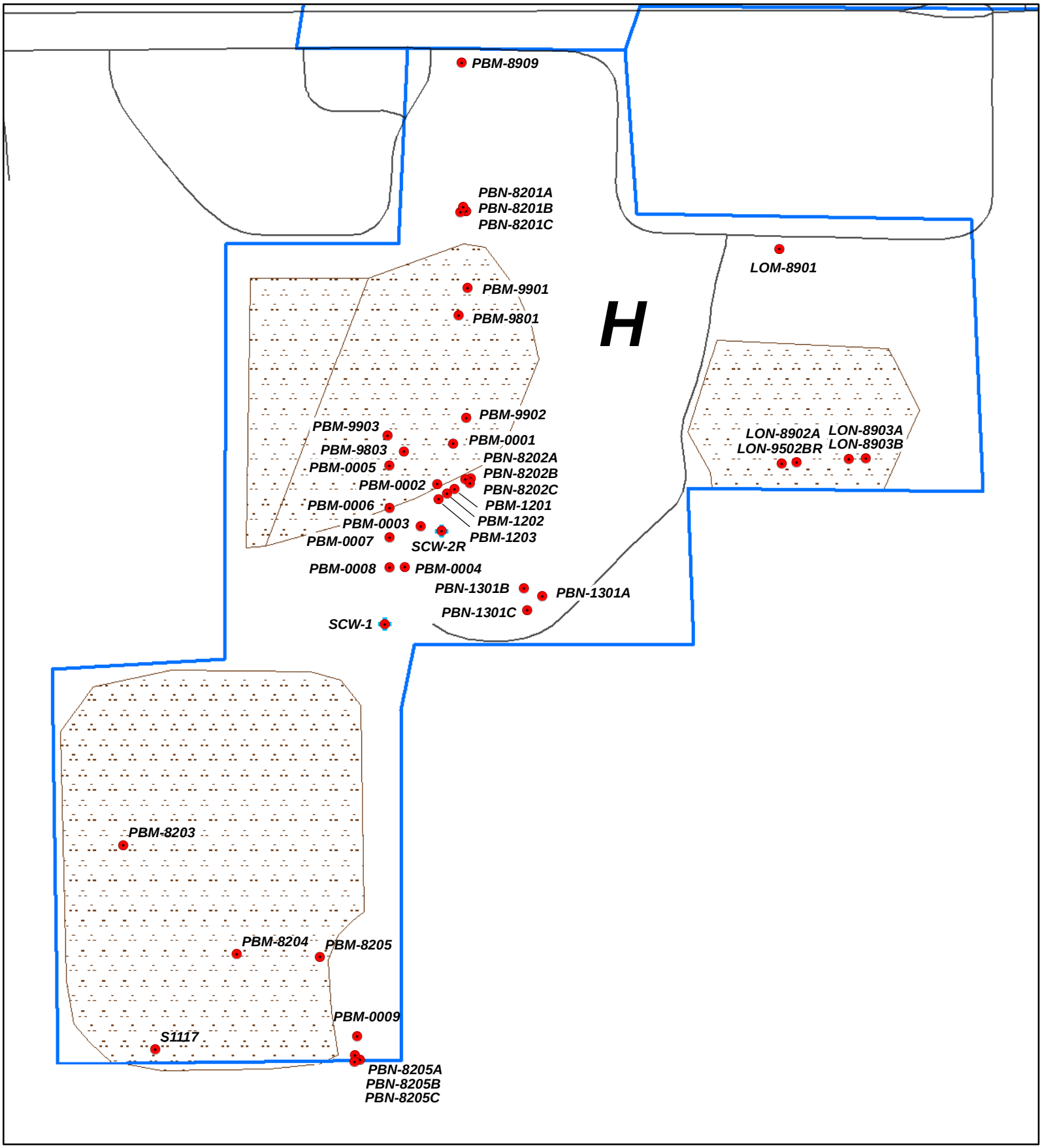


**Legend**

- Monitoring Well
- Extraction Well
- Waste Disposal Areas
- Parcel Boundary
- Road

Figure B.3.d

Monitoring and Extraction Well Location Map
Parcel H - Wisconsin Department of Natural Resources
Closure Report
Badger Army Ammunition Plant

1 inch = 260 feet

0 400 800 Feet

D:\GIS_Projects\WDNR Closure Request\H\GIS Registry\Figure B3d Monitoring We

# Figures Not Relevant To Case Closure Request

## B.4.a. Vapor Intrusion Map

Vapor studies conducted in Parcel H relate to the groundwater contaminant plume from the Propellant Burning Ground (PBG) area. Closure of the PBG groundwater plume is not part of the Parcel H closure request.

# Figures Not Relevant To Case Closure Request

## B.4.b. Other Media of Concern

No surface water is present at or adjacent to property.

# Figures Not Relevant To Case Closure Request

## B.4.c. Other

No other remedial actions beyond the soil excavation, final cover and thermal treatment have taken place on this parcel. Long term groundwater monitoring will continue for the entire site, including wells located within Parcel H. Currently, there is no natural attenuation data available. No additional remediation is anticipated.

## Documentation of Remedial Action (Attachment C)

# DISCLAIMER

Documents contained in Attachment C of the Case Closure – GIS Registry (Form 4400-202) are not included in the electronic version (GIS Registry Packet) available on RR Sites Map to limit file size.

For information on how to obtain a copy or to review the file, please contact the Remediation & Redevelopment (RR) Environmental Program Associate (EPA) at dnr.wi.gov/topic/Brownfields/Contact.html

WISCONSIN
DEPT. OF NATURAL RESOURCES

# Maintenance Plan

## D.1. Location map(s)

Landfill #1

1949 Waste Pit

Racetrack and Hazardous Waste Thermal Treatment Unit

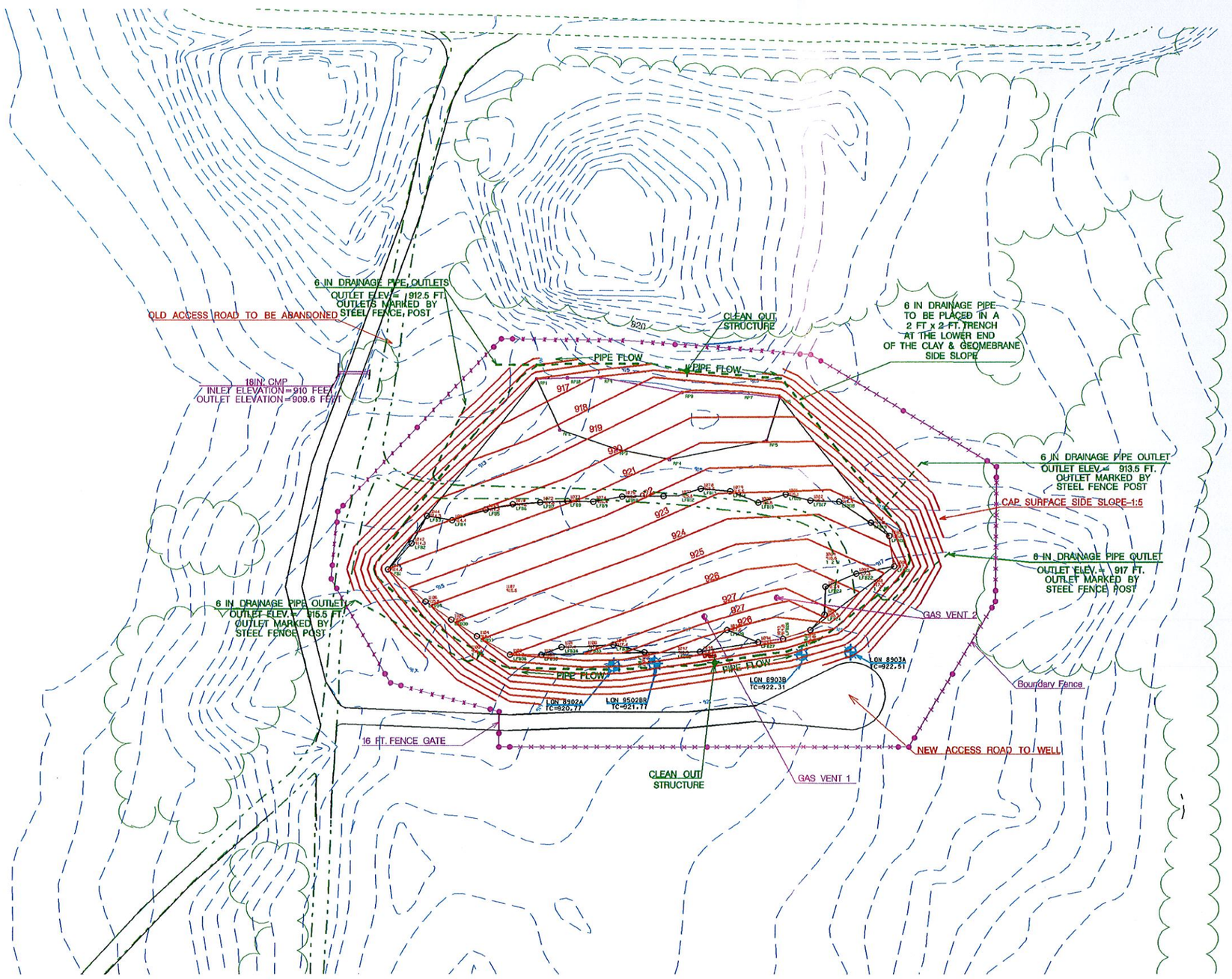


## LEGEND

- EXISTING 10 FT. CONTOUR LINES
- EXISTING 1 FT. CONTOUR LINES
- FINAL CONTOUR LINES
- MONITORING WELL LOCATION
- WOODED AREA
- EXISTING DIRT ROAD
- EXISTING PAVED ROAD
- NEW ACCESS ROAD
- DRAINAGE PIPE
- FENCE LINE
- GAS VENT
- CLEAN OUT STRUCTURE
- SILT FENCE

N

SCALE IN FEET

0 25 50 75 100 200

| | |
|---|---|
| DRAWN BY: C.A. NEITZEL | REFERENCE DRAWINGS |
| CHECKED: B.S. BOBROWICZ | FIGURE 2-1<br>LANDFILL #1 COMPLETED PLAN<br>FINAL CONSTRUCTION REPORT |
| APPROVAL SAFETY<br>SIGNED S. HOWARD | |
| APPROVAL<br>SIGNED W.J. WOLF | |
| APPROVAL<br>SIGNED C.A. NEITZEL | DATE: 11/2097 — DWG NO. SK-4576 SHEET 2 |
| APPROVAL<br>SIGNED | SCALE: AS SHOWN |
| THIS DRAWING SHALL NOT BE USED OR REPRODUCED EITHER WHOLLY OR IN PART EXCEPT WHERE AUTHORIZED IN CONNECTION WITH PROCUREMENT FOR THE UNITED STATES GOVERNMENT | OLIN CORPORATION<br>BARABOO, WISCONSIN<br>U. S. ARMY<br>Olin<br>Badger Army Ammuni |

| REV. NO. | REV. BY | DATE | REVISIONS | APPR. BY |
|---|---|---|---|---|

DO NOT SCALE THIS DRAWING. WORK TO FIGURES

UNLESS OTHERWISE SPECIFIED FRACTIONAL DIMENSIONS HELD TO 1/64 DECIMAL DIMENSIONS HELD TO .005

HOME\CIV\...GN\LANDFILL.DGN

EXISTING 18 IN. DIAMETER CMP
INLET INVERT ELEVATION = 857.1 FT.
OUTLET INVERT ELEVATION = 856.3 FT.

NEW 18 IN. DIAMETER CMP
INLET INVERT ELEVATION = 876 FT.
OUTLET INVERT ELEVATION = 875.5 FT.

NEW DRAINAGE SWALE

6 IN. DIAMETER PVC DRAIN PIPE OUTLET
END TO BE MARKED WITH A FENCE POST

NEW ACCESS ROAD
TO WELL

PBN 8201 A,B,C

EXISTING 18 IN. DIAMETER CLAY CULVERT
OUTLET INVERT ELEVATION = 857.3 FEET
INLET INVERT ELEVATION = 858 FEET
ROAD TO BE ABANDONED

6 IN. DIAMETER DRAINAGE PIPE END
TO BE MARKED TEMPORARILY WITH
A PVC CLEAN-OUT STRUCTURE

6 IN. PVC DRAIN PIPE OUTLET
END TO BE MARKED WITH A FENCE POST
CAP TOP SLOPE = 5%

1949 PIT PHASE ONE CONSTRUCTION CUTOFF LINE
AND GEOMEMBRANE KEY-IN LOCATION

CAP SIDE SLOPE = 1:5

6 IN. DIAMETER PVC DRAIN PIPE OUTLET
END TO BE MARKED WITH A FENCE POST

GAS VENT

KEY-IN SIDE SURFACE
TO SLOPE 1:3

6 IN. DIAMETER PVC DRAIN PIPE OUTLET
END TO BE MARKED WITH A FENCE POST

AREA TO BE CONSTRUCTED
AS PHASE TWO

DRAIN PIPE CLEAN OUT STRUCTURE

EXISTING ACCESS ROAD

6 IN. DIAMETER PVC DRAIN PIPE OUTLET
END TO BE MARKED WITH A FENCE POST

SOW NO. 2

NEW ACCESS ROAD TO MEET
WITH EXISTING ACCESS ROAD

PBN 8202 A,B,C

6 IN. DIAMETER PVC PERFORATED
DRAINAGE PIPE TO BE PLACED IN
A 3 FT. X 2 FT. TRENCH ALONG THE
LOWER END OF THE CLAY AND
GEOMEMBRANE SIDE SLOPE

ELECTRICAL TRANSFORMER
OVERHEAD ELECTRICAL LINES

NEW ACCESS ROAD
TO WELL

NEW 18 IN. DIAMETER CMP
INLET INVERT ELEVATION = 860 FEET
OUTLET INVERT ELEVATION = 878 FEET

PBM 8201

6 IN. DIAMETER PVC DRAIN PIPE OUTLET
END TO BE MARKED WITH A FENCE POST

EXISTING DECON OVEN

6 IN. DIAMETER DRAINAGE PIPE END
TO BE MARKED TEMPORARILY WITH
A PVC CLEAN-OUT STRUCTURE

PBM 8202

SMALL DRAINAGE DITCH TO BE CONSTRUCTED
ALONG THE UPGRADED ACCESS ROAD

NEW DRAINAGE SWALE

NEW ACCESS ROAD
TO DECON OVEN

NEW ACCESS ROAD
TO WELL

NEW 18 IN. DIAMETER CMP
INLET INVERT ELEVATION = 880 FEET
OUTLET INVERT ELEVATION = 879.1 FEET

GRADE TO DRAIN TO THE CULVERT

CONTROL HOUSE

NEW 18 IN. DIAMETER CMP
INLET INVERT ELEVATION = 880.5 FEET
OUTLET INVERT ELEVATION = 879.9 FEET

18" CMP

PBN 8910 C
PBN 8910 A
PBN 8910 B

RACETRACK SOIL COVER BOUNDARY
CONSTRUCTED IN 1995

860 870 871 872 873 874 875 876 877 878 879 898 899 880 900 920

## LEGEND

- EXISTING 10 FT. CONTOUR LINES
- EXISTING 1 FT. CONTOUR LINES
- FINAL CONTOUR LINES
- MONITORING WELL LOCATION
- WOODED AREA
- EXISTING DIRT ROAD
- EXISTING PAVED ROAD
- NEW ACCESS ROAD
- DRAINAGE PIPE
- GAS VENT
- DRAIN PIPE CLEAN OUT STRUCTURE
- SILT FENCE
- MONITORING WELL NEST LOCATION
- OVERHEAD ELECTRICAL LINES
- SOURCE CONTROL WELL NO. 2
- Culvert

N

SCALE IN FEET

0 50 100 200

| | |
|---|---|
| DRAWN BY: C.A. NEITZEL | REFERENCE DRAWINGS |
| CHECKED: B.S. BOBROWICZ | FIGURE 2-1<br>1949 PIT PHASE ONE<br>COMPLETED PLAN<br>1949 PIT PHASE ONE CAP<br>FINAL CONSTRUCTION REPORT |
| APPROVAL SAFETY<br>SIGNED S. HOWARD | |
| APPROVAL<br>SIGNED W.J. WOLF | |
| APPROVAL<br>SIGNED C.A. NEITZEL | DATE: 1/14/98 — DWG NO. SK-4578 SHEET 6 |
| APPROVAL<br>SIGNED | SCALE: AS SHOWN |

THIS DRAWING SHALL NOT BE USED OR REPRODUCED EITHER WHOLLY OR IN PART EXCEPT WHERE AUTHORIZED IN CONJUNCTION WITH PROCUREMENT FOR THE UNITED STATES GOVERNMENT

| REV. NO. | REV. BY | DATE | REVISIONS | APPR. BY |
|---|---|---|---|---|

OLIN CORPORATION
BARABOO, WISCONSIN
U. S. ARMY

Olin

Badger Army Ammunition

DO NOT SCALE THIS DRAWING. WORK TO FIGURES
UNLESS OTHERWISE SPECIFIED FRACTIONAL DIMENSIONS HELD TO 1/4 DECIMAL DIMENSIONS HELD TO .001

0 1 2 3 4 5 6

C:\CNTMP\PI...P.DGN

# Maintenance Plans Not Relevant To Case Closure Request

## D.1. Location Map

No features exist that require maintenance at the Racetrack/HWTTU.

# Maintenance Plan

## D.2. Brief descriptions

### Landfill #1

Landfill #1 is a closed demolition debris disposal facility that was used between 1942 and 1959. The area was covered and vegetated by 1974. The site is approximately 1.5 acre in size, elliptical in shape and has an estimated depth of 15 feet. The facility contains approximately 19,500 cubic yards of ash, slag, asphalt, concrete, wood and other metallic and nonmetallic wastes. In an effort to reduce infiltration, a composite cap including two feet of clay and a 60 mil membrane barrier was installed and completed in September 1997. Additional components of the final cover system included one foot of drainage sand, geotextile, two feet of general fill and one foot of topsoil. The area was vegetated and appropriate erosion control measures were installed. The Final Construction Report for the Landfill #1 final cover system was submitted to the Wisconsin Department of Natural Resources (WDNR) on January 29, 1998. Approval of this report has not been received.

### 1949 Waste Pit

The northern portion of the area that was known as the Propellant Burning Grounds (PBG) is divided into the 1949 Pit Area to the west and Contaminated Waste Area to the east. Burning and disposal activities in these areas were conducted from 1944 to 1962. The 1949 Pit was used to dispose of an estimated 58,000 cubic yards of waste, propellant and construction debris. The 1949 Pit Area is approximately 4 acres in size and is rectangular in shape. In 1968, the area was covered and vegetated. Metals contained in the buried waste and debris prompted the installation of a composite cap including two feet of clay and a 60 mil membrane barrier completed in August 1998. Additional components of the final cover system included one foot of drainage sand, geotextile, two feet of general fill and one foot of topsoil. The area was vegetated and appropriate erosion control measures were installed. The Final Construction Report for the 1949 Pit final cover system was approved by the WDNR on March 8, 1999. The Contaminated Waste Area is not part of this Parcel H closure request.

### Racetrack and Hazardous Waste Thermal Treatment Unit

The Racetrack is in the southern portion of the area that was known as the PBG. The area is approximately 10 acres in size, rectangular in shape and was constructed between 1949 and 1955. This area consisted of two burning pads to the west, four metal drying plates to the east and three waste burning/disposal pits to the southeast. The drying plates

were decommissioned, the use of the burning pits was discontinued and burning was restricted to the two burning pads in 1978. In 1984, burning was further restricted to a burning dish know as the Hazardous Waste Thermal Treatment Unit (HWTTU) which operated until November 26, 1993. In 1995, a soil cover system consisting of 30 inches of general fill and 6 inches of topsoil was installed over three quarters of the Racetrack as part of the final closure for the HWTTU. This area was vegetated in the spring of 1996. Closure of this portion of the Racetrack/HWTTU was approved by the WDNR on September 4, 1996. Contaminated soil was removed from the remaining portion of the Racetrack in 1997 and the WDNR letter dated December 2, 1997 indicated that no additional remedial actions were required for this area.

# Maintenance Plan

## D.3. Description of maintenance action(s)

**Landfill #1**

The Landfill #1 final cover system is inspected annually for erosion, settlement, undesirable vegetation growth and other deficiencies. The cover drainage system cleanouts and outlets, drainage culvert under the site access road, gas vents, perimeter barbed wire fence and gate, site identification signs and access roads are also inspected annually. Maintenance includes annual mowing of the vegetation and correction of cover deficiencies to maintain proper grade and prevent ponding of storm water.

**1949 Waste Pit**

The 1949 Waste Pit final cover system is inspected annually for erosion, settlement, undesirable vegetation growth and other deficiencies. The cover drainage system cleanouts and outlets, drainage culverts under the site access roads, gas vents, perimeter barbed wire fence and gates, site identification signs and access roads are also inspected annually. Maintenance includes annual mowing of the vegetation and correction of cover deficiencies to maintain proper grade and prevent ponding of storm water.

**Racetrack and Hazardous Waste Thermal Treatment Unit**

The Racetrack and Hazardous Waste Thermal Treatment Unit soil cover is inspected annually for erosion, settlement, undesirable vegetation growth and other deficiencies. Maintenance includes annual mowing of the vegetation and correction of cover deficiencies to maintain proper grade.

# Maintenance Plan

## D.4. Inspection log

Landfill #1

1949 Waste Pit

Racetrack and Hazardous Waste Thermal Treatment Unit

**ANNUAL CAP & COVER INSPECTION FORM**
**LANDFILL #1**

**Date:** _____ **Weather:** _____
**Time:** _____ **Temperature (°F):** _____
**Inspector:** _____ **Barometric Pressure (in. Hg):** _____
Ground Surface Conditions: _____ **Pressure Trend (R,S,F):** _____

**Inspection Checklist**

| Component | Satisfactory | Unsatisfactory | Comments |
|---|---|---|---|
| Cap and Vegetation | | | |
| Cleanouts (2) | | | |
| Drainage Ditches | | | |
| Drainage Pipes (5) | | | |
| Gas Vents (2) | | | |
| Gravel Site Road | | | |
| Asphalt Access Road | | | |
| Asphalt Road Culvert (1) | | | |
| Gate (1) and Fencing | | | |
| Site ID Signs (6) | | | |
| General Housekeeping | | | |

**Notes:**

# ANNUAL CAP & COVER INSPECTION FORM
# 1949 WASTE PIT

**Date:** _____ **Weather:** _____

**Time:** _____ **Temperature (°F):** _____

**Inspector:** _____ **Barometric Pressure (in. Hg):** _____

**Ground Surface Conditions:** _____ **Pressure Trend (R,S,F):** _____

## Inspection Checklist

| Component | Satisfactory | Unsatisfactory | Comments |
|---|---|---|---|
| Cap and Vegetation | | | |
| Cleanouts (9) | | | |
| Drainage Ditches | | | |
| Drainage Pipes (6) | | | |
| Gas Vents (2) | | | |
| Asphalt Access Road | | | |
| Gravel Site Access Road | | | |
| Road Culverts (4) | | | |
| Gates (1) and Fencing | | | |
| Site ID Signs - Wood (5) | | | |
| Site ID Signs - Metal (4) | | | |
| General Housekeeping | | | |

**Notes:**

**ANNUAL CAP & COVER INSPECTION FORM**
**RACETRACK AND HAZARDOUS WASTE THERMAL TREATMENT UNIT**

**Date:** _____ **Weather:** _____
**Time:** _____ **Temperature (°F):** _____
**Inspector:** _____ **Barometric Pressure (in. Hg):** _____
**Ground Surface Conditions:** _____ **Pressure Trend (R,S,F):** _____

**Inspection Checklist**

| Component | Satisfactory | Unsatisfactory | Comments |
|---|---|---|---|
| Cap and Vegetation | | | |
| Drainage Ditches | | | |
| Site Access | | | |
| Site ID Signs (5) | | | |
| General Housekeeping | | | |

**Notes:**

# Maintenance Plan

## D.5. Contact information

Mike Sitton
Real Property Accountable Officer
Badger Army Ammunition Plant
S7560 U.S. Highway 12
North Freedom, WI 53951-9588
(608) 643-3361
robert.m.sitton.civ@mail.mil

# Maintenance Plans Not Relevant To Case Closure Request

## D.6. Photos

Performance standard, structural impediment, or vapor mitigation system were not constructed as part of remedial action.

# Attachment E
# Place Holder

# Monitoring Well Information

The following monitoring wells will remain in use at the site as they may be used as part of BAAPs on-going groundwater monitoring program:

SCW-1

SCW-2R

PBM-8909

PBM-9901, 9902, 9903

PBM-9801, 9803

PBM-0001, 0002, 0003, 0004, 0005, 0006, 0007, 0008

PBM-0009

PBM-1201, 1202, 1203

PBM-8203, 8204, 8205

PBN-8201A, 8201B, 8201C, 8202A, 8202B, 8202C, 8205A, 8205B, 8205C

PBN-1301A, 1301B, 1301C

S1117

LOM-8901

LON-8902A, 8903A, 8903B

LON-9502BR

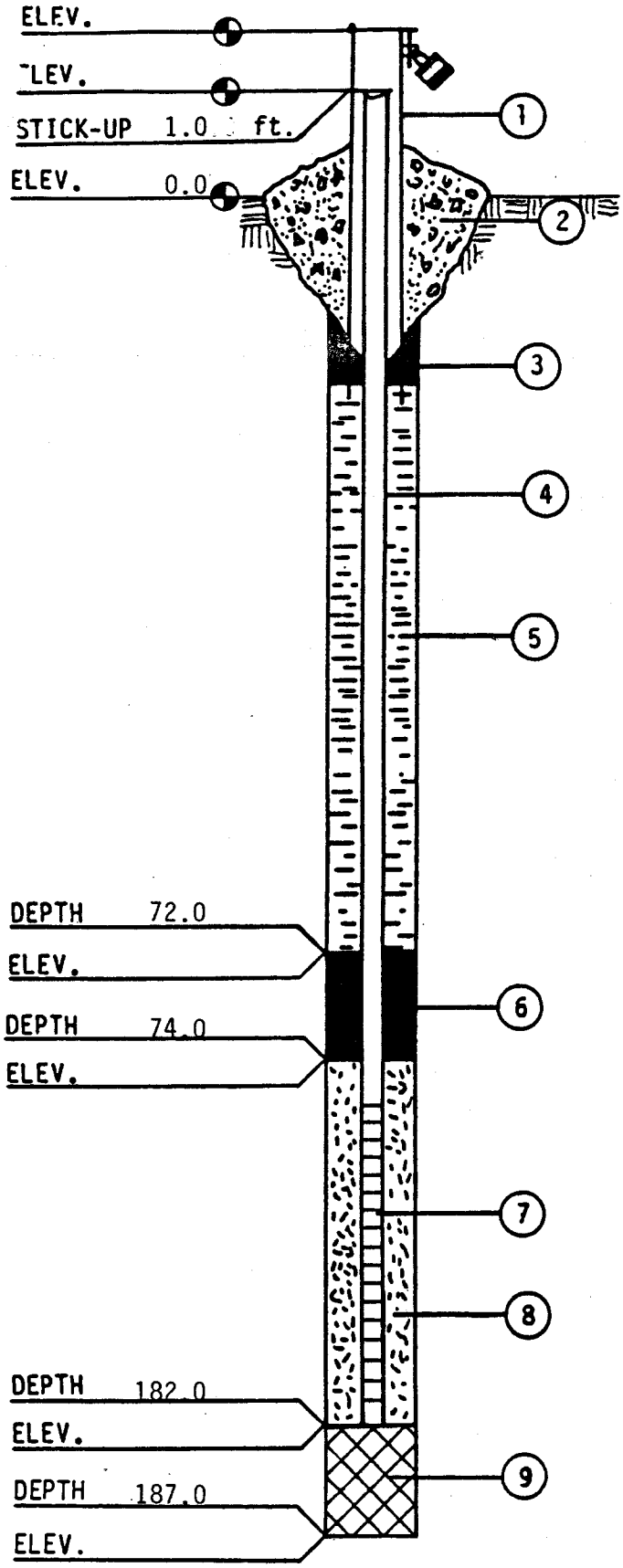


MONITORING WELL CONSTRUCTION INFORMATION

JOB NO. 812301

BORING/WELL NO. SCW 1 #531

DATE 12-13-89

CHIEF/UNIT RK 9250

1. PROTECTIVE CASING YES NO

   LOCKING YES NO

2. CONCRETE SEAL YES NO

3. TYPE OF SURFACE SEAL (IF INSTALLED)

   Cement Grout

4. SOLID PIPE TYPE 3.0" Steel Pipe

   SOLID PIPE LENGTH 96.0 ft.

   JOINT TYPE SLIP/GLUED THREADED

5. TYPE OF BACKFILL Cement Grout

   HOW INSTALLED TREMIE FROM SURFACE

6. TYPE OF LOWER SEAL (IF INSTALLED)

   Bentonite Pellets

7. SCREEN TYPE Johnson Stainless Steel

   SCREEN LENGTH 86.5

   SLOT-SIZE .020 LENGTH 85.0 ft.

   SCREEN DIAMETER 8.0 in.

8. TYPE OF BACKFILL AROUND SCREEN

   #30 Flint Sand

9. TYPE OF BACKFILL Flint Sand

10. DRILLING METHOD 16.0" Wash Bore

11. ADDITIVES USED (IF ANY)

    Bentonite Drilling Mud

WATER LEVEL _____ DATE _____

*ALL DEPTHS MEASURED FROM GROUND SURFACE.

EXPLORATION TECHNOLOGY INC.

State of Wisconsin
Department of Natural Resources

Route to: Watershed/Wastewater ☐ Waste Management ☐ Remediation/Redevelopment ☑ Other ☐ _____

# MONITORING WELL CONSTRUCTION

Form 4400-113A Rev. 7-98

| | | |
|---|---|---|
| Facility/Project Name: Badger AAP | Local Grid Location of Well: ____ ft. ☐ N. ☐ S. ____ ft. ☐ E. ☐ W. | Well Name: PBM-1202 |
| Facility License, Permit or Monitoring No.: 2814 | Local Grid Origin ☐ (estimated: ☐) or Well Location ☐ Lat. (NAD 83)° ____ " Long. ____ ° ____ ' ____ " or | Wis. Unique Well No.: VX885 / DNR Well ID No.: 765 |
| Facility ID: 157053930 | St. Plane 491507.36 ft. N, 2035441.85 ft. E. (S)/C/N | Date Well Installed: 11 / 19 / 2012 (m m d d y y y y) |
| Type of Well: Well Code 11 / MW | Section Location of Waste/Source: ____ 1/4 of ____ 1/4 of Sec. ____, T. ____ N, R. ____ ☐ E. ☐ W. | Well Installed By: Name (first, last) and Firm: Michael Hanson; Layne Christensen Company |
| Distance from Waste/Source ____ ft. Enf. Stds. Apply ☑ | Location of Well Relative to Waste/Source: u ☐ Upgradient s ☐ Sidegradient d ☑ Downgradient n ☐ Not Known; Gov. Lot Number ____ | |

A. Protective pipe, top elevation ____ ft. MSL

B. Well casing, top elevation 881.48 ft. MSL

C. Land surface elevation 879.01 ft. MSL

D. Surface seal, bottom ____ ft. MSL or 5.0 ft.

12. USCS classification of soil near screen:
GP ☐ GM ☐ GC ☐ GW ☐ SW ☑ SP ☐
SM ☐ SC ☐ ML ☐ MH ☐ CL ☐ CH ☐
Bedrock ☐

13. Sieve analysis performed? ☐ Yes ☑ No

14. Drilling method used: Rotary ☐ 50; Hollow Stem Auger ☐ 41; Other ☑ Rotosonic

15. Drilling fluid used: Water ☑ 02; Air ☐ 01; Drilling Mud ☐ 03; None ☐ 99

16. Drilling additives used? ☐ Yes ☑ No

Describe _____

17. Source of water (attach analysis, if required):

E. Bentonite seal, top ____ ft. MSL or 96.5 ft.

F. Fine sand, top ____ ft. MSL or ____ ft.

G. Filter pack, top ____ ft. MSL or 101.5 ft.

H. Screen joint, top ____ ft. MSL or 103.5 ft.

I. Well bottom ____ ft. MSL or 118.5 ft.

J. Filter pack, bottom ____ ft. MSL or 118.5 ft.

K. Borehole, bottom ____ ft. MSL or 118.5 ft.

L. Borehole, diameter 7.0 in.

M. O.D. well casing 2.9 in.

N. I.D. well casing 2.3 in.

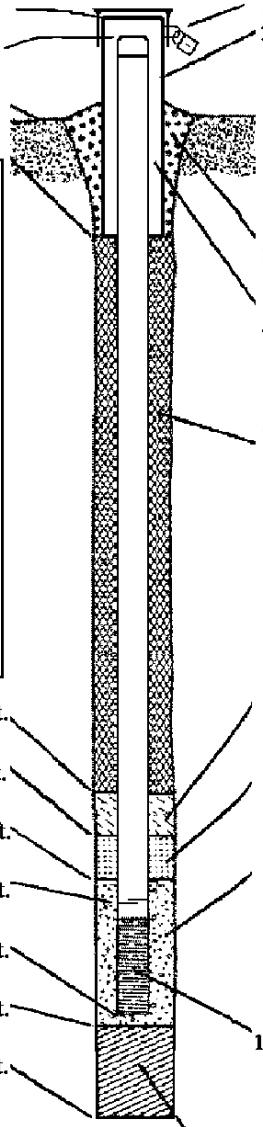

1. Cap and lock? ☑ Yes ☐ No

2. Protective cover pipe:
a. Inside diameter: 8.0 in.
b. Length: 7.0 ft.
c. Material: Steel ☑ 04; Other ☐
d. Additional protection? ☐ Yes ☑ No
If yes, describe: _____

3. Surface seal: Bentonite ☐ 30; Concrete ☑ 01; Other ☐

4. Material between well casing and protective pipe: Bentonite ☐ 30; Other ☑ sand

5. Annular space seal: a. Granular/Chipped Bentonite ☐ 33
b. ____ Lbs/gal mud weight . . . Bentonite-sand slurry ☐ 35
c. 3.5 Lbs/gal mud weight . . . . . Bentonite slurry ☑ 31
d. ____ % Bentonite . . . . . Bentonite-cement grout ☐ 50
e. 150 gal $Ft^3$ volume added for any of the above
f. How installed: Tremie ☑ 01; Tremie pumped ☐ 02; Gravity ☐ 08

6. Bentonite seal: a. Bentonite granules ☐ 33
b. ☐1/4 in. ☑3/8 in. ☐1/2 in. Bentonite chips ☑ 32
c. _____ Other ☐

7. Fine sand material: Manufacturer, product name & mesh size
a. _____
b. Volume added ____ $ft^3$

8. Filter pack material: Manufacturer, product name & mesh size
a. Red Flint #15
b. Volume added 4 bags $ft^3$

9. Well casing: Flush threaded PVC schedule 40 ☐ 23; Flush threaded PVC schedule 80 ☑ 24; Other ☐

10. Screen material: same as above
a. Screen type: Factory cut ☑ 11; Continuous slot ☐ 01; Other ☐
b. Manufacturer Campbell Monoflex
c. Slot size: 0.010 in.
d. Slotted length: 15.0 ft.

11. Backfill material (below filter pack): None ☑ 14; Other ☐

I hereby certify that the information on this form is true and correct to the best of my knowledge.

| | |
|---|---|
| Signature: Joel Janssen | Firm: BTS, LLC |

Please complete both Forms 4400-113A and 4400-113B and return them to the appropriate DNR office and bureau. Completion of these reports is required by chs. 160, 281, 283, 289, 291, 292, 293, 295, and 299, Wis. Stats., and ch. NR 141, Wis. Adm. Code. In accordance with chs. 281, 289, 291, 292, 293, 295, and 299, Wis. Stats., failure to file these forms may result in a forfeiture of between $10 and $25,000, or imprisonment for up to one year, depending on the program and conduct involved. Personally identifiable information on these forms is not intended to be used for any other purpose. NOTE: See the instructions for more information, including where the completed forms should be sent.

State of Wisconsin
Department of Natural Resources

Route to: Watershed/Wastewater ☐ Waste Management ☐ Remediation/Redevelopment ☑ Other ☐ _____

# MONITORING WELL CONSTRUCTION

Form 4400-113A Rev. 7-98

| | | |
|---|---|---|
| Facility/Project Name: Badger AAP | Local Grid Location of Well: ____ ft. ☐ N. ☐ S. ____ ft. ☐ E. ☐ W. | Well Name: PBM-1201 |
| Facility License, Permit or Monitoring No.: 2814 | Local Grid Origin ☐ (estimated: ☐) or Well Location ☐ Lat. (NAD 83)° ____ " Long. ____ ° ____ ' ____ " or | Wis. Unique Well No.: VX883 / DNR Well ID No.: 764 |
| Facility ID: 157053930 | St. Plane 491516.30 ft. N, 2035457.96 ft. E. (S)/C/N | Date Well Installed: 11 / 15 / 2012 (m m d d y y y y) |
| Type of Well: Well Code 11 / MW | Section Location of Waste/Source: ____ 1/4 of ____ 1/4 of Sec. ____, T. ____ N, R. ____ ☐ E. ☐ W. | Well Installed By: Name (first, last) and Firm: Michael Hanson; Layne Christensen Company |
| Distance from Waste/Source ____ ft. Enf. Stds. Apply ☑ | Location of Well Relative to Waste/Source: u ☐ Upgradient s ☐ Sidegradient d ☑ Downgradient n ☐ Not Known; Gov. Lot Number ____ | |

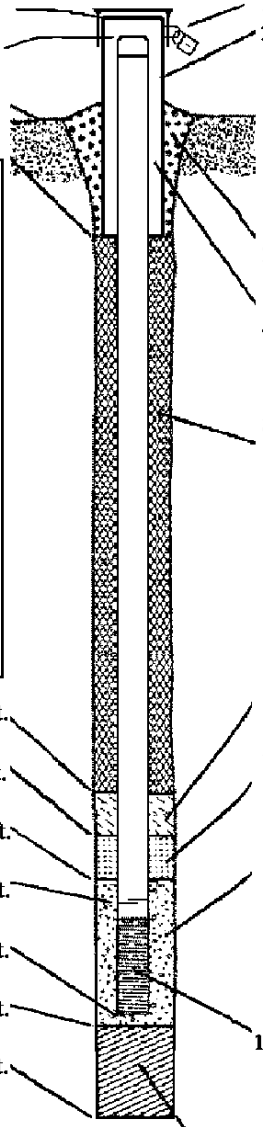

A. Protective pipe, top elevation ____ ft. MSL

B. Well casing, top elevation 882.56 ft. MSL

C. Land surface elevation 880.24 ft. MSL

D. Surface seal, bottom ____ ft. MSL or 5.0 ft.

12. USCS classification of soil near screen:
GP ☐ GM ☐ GC ☐ GW ☐ SW ☑ SP ☐
SM ☐ SC ☐ ML ☐ MH ☐ CL ☐ CH ☐
Bedrock ☐

13. Sieve analysis performed? ☐ Yes ☑ No

14. Drilling method used: Rotary ☐ 50; Hollow Stem Auger ☐ 41; Other ☑ ____ Rotosonic

15. Drilling fluid used: Water ☑ 02; Air ☐ 01; Drilling Mud ☐ 03; None ☐ 99

16. Drilling additives used? ☐ Yes ☑ No

Describe ____

17. Source of water (attach analysis, if required): ____

E. Bentonite seal, top ____ ft. MSL or 96.5 ft.

F. Fine sand, top ____ ft. MSL or ____ ft.

G. Filter pack, top ____ ft. MSL or 101.5 ft.

H. Screen joint, top ____ ft. MSL or 103.5 ft.

I. Well bottom ____ ft. MSL or 118.5 ft.

J. Filter pack, bottom ____ ft. MSL or 118.5 ft.

K. Borehole, bottom ____ ft. MSL or 118.5 ft.

L. Borehole, diameter 7.0 in.

M. O.D. well casing 2.9 in.

N. I.D. well casing 2.3 in.

1. Cap and lock? ☑ Yes ☐ No

2. Protective cover pipe:
a. Inside diameter: 8 in.
b. Length: 7 ft.
c. Material: Steel ☑ 04; Other ☐ ____
d. Additional protection? ☐ Yes ☑ No
If yes, describe: ____

3. Surface seal: Bentonite ☐ 30; Concrete ☑ 01; Other ☐ ____

4. Material between well casing and protective pipe: Bentonite ☐ 30; Other ☑ ____ sand

5. Annular space seal: a. Granular/Chipped Bentonite ☐ 33
b. ____ Lbs/gal mud weight . . . Bentonite-sand slurry ☐ 35
c. 3.5 Lbs/gal mud weight . . . . . Bentonite slurry ☑ 31
d. ____ % Bentonite . . . . . Bentonite-cement grout ☐ 50
e. 150 gal $Ft^3$ volume added for any of the above
f. How installed: Tremie ☑ 01; Tremie pumped ☐ 02; Gravity ☐ 08

6. Bentonite seal: a. Bentonite granules ☐ 33
b. ☐ 1/4 in. ☑ 3/8 in. ☐ 1/2 in. Bentonite chips ☑ 32
c. ____ Other ☐ ____

7. Fine sand material: Manufacturer, product name & mesh size
a. ____
b. Volume added ____ $ft^3$

8. Filter pack material: Manufacturer, product name & mesh size
a. Red Flint #15
b. Volume added 4 bags $ft^3$

9. Well casing: Flush threaded PVC schedule 40 ☐ 23; Flush threaded PVC schedule 80 ☑ 24; Other ☐ ____

10. Screen material: same as above
a. Screen type: Factory cut ☑ 11; Continuous slot ☐ 01; Other ☐ ____
b. Manufacturer Campbell Monoflex
c. Slot size: 0.010 in.
d. Slotted length: 15.0 ft.

11. Backfill material (below filter pack): None ☑ 14; Other ☐ ____

I hereby certify that the information on this form is true and correct to the best of my knowledge.

| | |
|---|---|
| Signature: Joel Janssen | Firm: BTS, LLC |

Please complete both Forms 4400-113A and 4400-113B and return them to the appropriate DNR office and bureau. Completion of these reports is required by chs. 160, 281, 283, 289, 291, 292, 293, 295, and 299, Wis. Stats., and ch. NR 141, Wis. Adm. Code. In accordance with chs. 281, 289, 291, 292, 293, 295, and 299, Wis. Stats., failure to file these forms may result in a forfeiture of between $10 and $25,000, or imprisonment for up to one year, depending on the program and conduct involved. Personally identifiable information on these forms is not intended to be used for any other purpose. NOTE: See the instructions for more information, including where the completed forms should be sent.

State of Wisconsin
Department of Natural Resources

Route to:
Solid Waste ☐ Haz. Waste ☐ Wastewater ☐
Env. Response & Repair ☐ Underground Tanks ☐ Other ☐ _____

# MONITORING WELL CONSTRUCTION

Form 4400-113A Rev. 4-90

| Facility/Project Name | Local Grid Location of Well | Well Name |
|---|---|---|
| Badger Army Ammunition Plant/Baraboo | ☐ N. ☐ E. ____ ft. ☐ S. ____ ft. ☐ W. | LON 9502BR |
| Facility License, Permit or Monitoring Number: _ _ _ _ _ _ _ _ | Grid Origin Location: Lat. ___ ___ ___ Long. ___ ___ ___ or | Wis. Unique Well Number: _ _ _ _ _ _ _ _ DNR Well Number: _ _ _ |
| Type of Well: Water Table Observation Well ■ 11; Piezometer ☐ 12 | St. Plane 491571.1 ft. N, 2067700.7 ft. E. | Date Well Installed: 06 / 01 / 95 |
| Distance Well Is From Waste/Source Boundary: ____ ft. | Section Location of Waste/Source: SW 1/4 of NE 1/4 of Sec. 6, T. 10 N, R. 7 ■ E. ☐ W | Well Installed By: (Person's Name & Firm): Frank Badula, Environmental & Foundation Drilling, Inc. |
| Is Well A Point of Enforcement Std. Application? ☐ Yes ☐ No | Location of Well Relative to Waste/Source: u ☐ Upgradient s ☐ Sidegradient d ☐ Downgradient n ☐ Not Known | |

A. Protective Pipe, top elevation ____.__ ft. MSL

B. Well casing, top elevation 921.65 ft. MSL

C. Land surface elevation 919.3 ft. MSL

D. Surface seal, bottom ____.__ ft MSL or __.__ ft.

12. USCS classification of soil near screen:
GP ☐ GM ☐ GC ☐ GW ☐ SW ☐ SP ☐
SM ☐ SC ☐ ML ☐ MH ☐ CL ☐ CH ☐
Bedrock ☐

13. Sieve analysis attached? ☐ Yes ■ No

14. Drilling method used: Rotary ■ 50; Hollow Stem Auger ■ 41; _____ Other ☐

15. Drilling fluid used: Water ☐ 02 Air ☐ 01 Drilling Mud ■ 03 None ☐ 99

16. Drilling additives used? ☐ Yes ■ No
Describe _____

17. Source of water (attach analysis): _____

E. Bentonite seal, top 745.3 ft. MSL or 174.0 ft.

F. Fine sand, top 738.3 ft. MSL or 181.0 ft.

G. Filter pack, top 736.3 ft. MSL or 183.0 ft.

H. Screen joint, top 734.3 ft. MSL or 185.0 ft.

I. Well bottom 719.3 ft. MSL or 200.0 ft.

J. Filter pack, bottom 715.8 ft. MSL or 203.5 ft.

K. Borehole, bottom 715.8 ft. MSL or 203.5 ft.

L. Borehole, diameter 8.3 in.

M. O.D. well casing 4.30 in.

N. I.D. well casing 4.03 in.

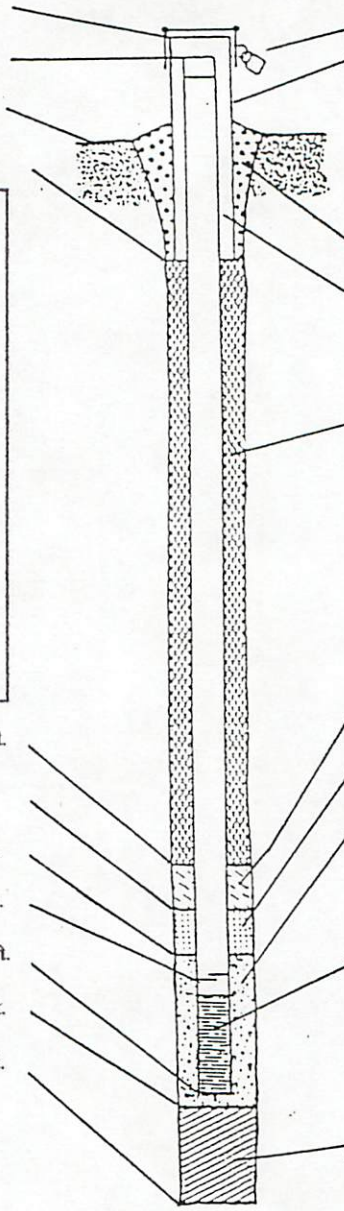

1. Cap & lock? ■ Yes ☐ No
2. Protective cover pipe:
   a. Inside diameter: 6.0 in.
   b. Length: 7.0 ft.
   c. Material: _____ Steel ☐ 04 Other ☐
   d. Additional protection? ☐ Yes ☐ No
      If yes, describe: _____
3. Surface seal: _____ Bentonite ■ 30 Concrete ☐ 01 Other ☐
4. Material between well casing & protective pipe: _____ Bentonite ☐ 30 Annular space seal ☐ Other ☐
5. Annular space seal: a. Granular Bentonite ■ 33
   b. _____ Lbs/gal mud weight..... Bentonite-sand slurry ☐ 35
   c. _____ Lbs/gal mud weight..... Bentonite slurry ☐ 31
   d. _____ % Bentonite..... Bentonite-cement grout ☐ 50
   e. 450# Ft³ volume added for any of the above
   f. How installed: Tremie ☐ 01 Tremie pumped ■ 02 Gravity ☐ 08
6. Bentonite seal: a. Bentonite granules ☐ 33
   b. ☐ ¼ in. ☐ ⅜ in. ☐ ½ in. Bentonite pellets ☐ 32
   c. _____ Other ☐
7. Fine sand material: Manufacturer, product name and mesh size
   a. 40-60 Unimin
   b. Volume added 50# ft³
8. Filter pack material: Manufacturer, product name and mesh size
   a. Badger Mining, flint, #30
   b. Volume added 500# ft³
9. Well casing: _____ Flush threaded PVC schedule 40 ☐ 23 Flush threaded PVC schedule 80 ■ 24 Other ☐
10. Screen Material: PVC
   a. Screen Type: _____ Factory Cut ■ 11 Continuous slot ☐ 01 Other ☐
   b. Manufacturer Boart-Northern Air
   c. Slot size: 0.010 in.
   d. Slotted Length: 14.6 ft.
11. Backfill material (below filter pack): _____ None ■ 14 Other ☐

I hereby certify that the information on this form is true and correct to the best of my knowledge.

| Signature | Firm |
|---|---|
| | Environmental & Foundation Drilling, Inc. |

Please complete both sides of this form and return to the appropriate DNR office listed at the top of this form as required by chs. 144, 147 and 160, Wis. Stats., and ch. NR 141, Wis. Ad. Code. In accordance with ch. 144, Wis. Stats., failure to file this form may result in a forfeiture of not less than $10, nor more than $5000 for each day of violation. In accordance with ch. 147, Wis. Stats., failure to file this form may result in a forfeiture of not more that $10,000 for each day of violation. NOTE: Shaded areas are for DNR use only. See instructions for more information including where the completed form should be sent.

State of Wisconsin
Department of Natural Resources

MONITORING WELL CONSTRUCTION
Form 4400-113A
8-89

| | | |
|---|---|---|
| Facility/Project Name: R Lake Army Ammunition Plant | Grid Location: 4,802,959.1 m/ft N. S.; 272,510.9 m/ft E. W. | Well Name: LON-89-03B #660 |
| License, Permit or Monitoring Number: _____ | | Wis. Unique Well Number: _____ DNR Well Number: _____ |
| Type of Well: Water Table Observation Well ☐ 11; Piezometer ☒ 12 | Section Location: ____ 1/4 of ____ 1/4 of Section ____, T ____ N, R ____ ☐ E ☐ W | Date Well Installed: 02/20/89 (mm/dd/yy) |
| Distance Well Is From Waste/Source Boundary: NA ft. | Location of Well Relative to Waste/Source: ☐ Upgradient ☐ Sidegradient ☐ Downgradient ☐ Not Known | Well Installed By: (Person's Name and Firm) Dave A. Bekin / E.C. Jordan Co |
| Is Well A Point of Enforcement Std. Application? ☐ Yes ☒ No | | |

A. Protective pipe, top elevation 922.19 ft. MSL

B. Well casing, top elevation 921.99 ft. MSL

C. Land surface elevation 919.5 ft. MSL

D. Surface seal, bottom ____ ft. MSL or ____ ft.

12. USCS classification of soil near screen: ☐ GP ☐ GM ☐ GC ☐ GW ☐ SW ☒ SP ☐ SM ☐ SC ☐ ML ☐ MH ☐ CL ☐ CH ☐ Bedrock

13. Sieve analysis attached? ☐ Yes ☒ No

14. Drilling method used: Rotary ☐ 50; Hollow Stem Auger ☐ 41; Other ☒ ___ Dual Wall

15. Drilling fluid used: Water ☐ 02; Air ☒ 01; Drilling Mud ☐ 03; None ☐ 99

16. Drilling additives used? ☐ Yes ☒ No

Describe ____

17. Source of water (attach analysis): PW #2

E. Bentonite seal, top 148.5 ft. MSL or 171.0 ft.

F. Fine sand, top NA ft. MSL or NA ft.

G. Filter pack, top 143.5 ft. MSL or 176.0 ft.

H. Well screen, top 126.5 ft. MSL or 193.0 ft.

I. Well screen, bottom 121.5 ft. MSL or 198.0 ft.

J. Filter pack, bottom 121.5 ft. MSL or 198.0 ft.

K. Borehole, bottom 119.5 ft. MSL or 200.0 ft.

L. Borehole, diameter 9.5 in.

M. O.D. well casing 4.5 in.

N. I.D. well casing 4.0 in.

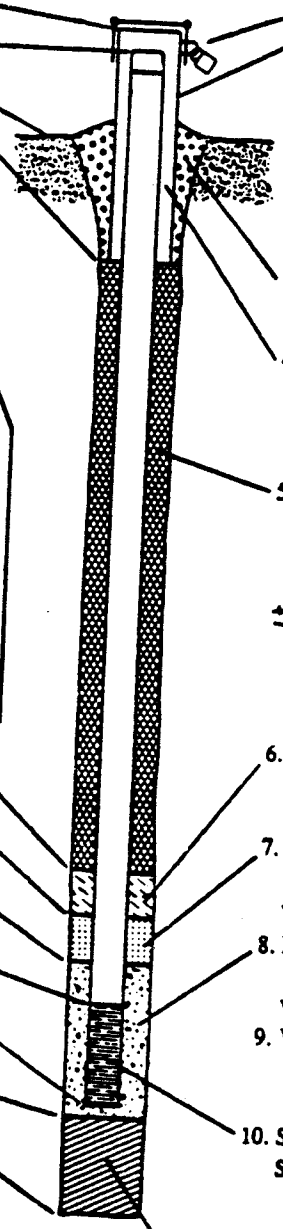

1. Cap and lock? ☒ Yes ☐ No

2. Protective cover pipe:
   a. Inside diameter: 6.0 in.
   b. Length: 2.0 ft.
   c. Material: Steel ☒ 04; Other ☐ __
   d. Additional protection? ☒ Yes ☐ No
   If yes, describe: 4 bucking posts

3. Surface seal: Bentonite ☐ 30; Concrete ☐ 01; Other ☒ __ Grout

4. Material between well casing and protective pipe: Bentonite ☐ 30; Annular space seal ☐; Other ☒ __ Grout

5. Annular space seal: Granular Bentonite ☐ 33; Bentonite-sand slurry ☐ 35; Bentonite slurry ☐ 31; Bentonite-cement grout ☒ 50
   ____ Lbs/gal mud weight
   ____ Lbs/gal mud weight
   5 % Bentonite
   ± 700 gal/ft volume added for any of the above
   How installed: Tremie ☐ 01; Tremie pumped ☒ 02; Gravity ☐ 08

6. Bentonite seal: Bentonite granules ☐ 33; Bentonite pellets ☒ 32; Other ☐ __
   ☐ 1/4 in. ☒ 3/8 in. ☐ 1/2 in.

7. Fine sand material: Manufacturer, product name and mesh size NA
   Volume added NA ft³

8. Filter pack material: Manufacturer, product name and mesh size Red Flint, Silica Filter Sand
   Volume added ≈ 2.4 ft³

9. Well casing: Flush threaded PVC schedule 40 ☐ 23; Flush threaded PVC schedule 80 ☒ 24; Other ☐ __

10. Screen material: Schedule 80 PVC
    Screen type: Factory cut ☒ 11; Continuous slot ☐ 01; Other ☐ __
    Manufacturer Timco
    Slot size: 0.010 in.
    Slotted length: 5.0 ft.

11. Backfill material (below filter pack): None ☐; Other ☒ Natural Cave

I certify that the information on this form is true and correct to the best of my knowledge.

Signature: [signature] Firm: E.C. Jordan Co

Please complete and return both sides of this form as required by chs. 144, 147 and 160, Wis. Stats., and ch. NR 141, Wis. Adm. Code. In accordance with ch. 144, Wis Stats., failure to file this form may result in a forfeiture of not less than $10, nor more than $5,000 for each day of violation. In accordance with ch. 147, Wis. Stats., failure to file this form may result in a forfeiture of not more than $10,000 for each day of violation.

NOTE: Shaded areas are for DNR use only. See instructions for more information.

State of Wisconsin
Department of Natural Resources

MONITORING WELL CONSTRUCTION
Form 4400-113A
8-89

| | | |
|---|---|---|
| Facility/Project Name: R. Sacc Army Ammunition Plant | Grid Location: 4,502,959.3 m N ☒ N. ☐ S. / 297,521.8 m E ☒ E. ☐ W. | Well Name: LON-89-03A #659 |
| License, Permit or Monitoring Number: _____ | | Wis. Unique Well Number: _____ DNR Well Number: _____ |
| Type of Well: Water Table Observation Well ☒ 11; Piezometer ☐ 12 | Section Location: ____ 1/4 of ____ 1/4 of Section ____, T ____ N, R ____ ☐ E ☐ W | Date Well Installed: 02/20/89 (m m d d y y) |
| Distance Well Is From Waste/Source Boundary: NA ft. | | Well Installed By: (Person's Name and Firm) Dave H. Belan / E. C. Jordan Co |
| Is Well A Point of Enforcement Std. Application? ☐ Yes ☒ No | Location of Well Relative to Waste/Source: ☐ Upgradient ☐ Sidegradient ☐ Downgradient ☐ Not Known | |

A. Protective pipe, top elevation 922.29 ft. MSL

B. Well casing, top elevation 922.14 ft. MSL

C. Land surface elevation 919.2 ft MSL

D. Surface seal, bottom _____ ft. MSL or _____ ft.

12. USCS classification of soil near screen:
☐ GP ☐ GM ☐ GC ☐ GW ☐ SW ☒ SP
☐ SM ☐ SC ☐ ML ☐ MH ☐ CL ☐ CH
☐ Bedrock

13. Sieve analysis attached? ☐ Yes ☒ No

14. Drilling method used: Rotary ☐ 50; Hollow Stem Auger ☐ 41; Other ☒ ___
Dual Wall

15. Drilling fluid used: Water ☐ 02; Air ☒ 01; Drilling Mud ☐ 03; None ☐ 99

Drilling additives used? ☐ Yes ☒ No

Describe _____

17. Source of water (attach analysis):
PW #2

E. Bentonite seal, top 792.7 ft. MSL or 126.5 ft.

F. Fine sand, top NA ft. MSL or NA ft.

G. Filter pack, top 786.7 ft. MSL or 133.0 ft.

H. Well screen, top 781.2 ft. MSL or 138.0 ft.

I. Well screen, bottom 761.2 ft. MSL or 158.0 ft.

J. Filter pack, bottom 761.2 ft. MSL or 158.0 ft.

K. Borehole, bottom 759.2 ft. MSL or 160.0 ft.

L. Borehole, diameter 9.5 in.

M. O.D. well casing 4.5 in.

N. I.D. well casing 4.0 in.

1. Cap and lock? ☒ Yes ☐ No

2. Protective cover pipe:
a. Inside diameter: 6.0 in.
b. Length: 2.0 ft.
c. Material: Steel ☒ 04; Other ☐ __
d. Additional protection? ☒ Yes ☐ No
If yes, describe: 4 bucking posts

3. Surface seal: Bentonite ☐ 30; Concrete ☐ 01; Other ☒ __
Grout

4. Material between well casing and protective pipe: Bentonite ☐ 30; Annular space seal ☐; Other ☒ __
Grout

5. Annular space seal: Granular Bentonite ☐ 33
____ Lbs/gal mud weight . . . Bentonite-sand slurry ☐ 35
____ Lbs/gal mud weight . . . . . Bentonite slurry ☐ 31
5 % Bentonite . . . . . Bentonite-cement grout ☒ 50
± 700 gal ft³ volume added for any of the above
How installed: Tremie ☐ 01; Tremie pumped ☒ 02; Gravity ☐ 08

6. Bentonite seal: Bentonite granules ☐ 33
☐ 1/4 in. ☒ 3/8 in. ☐ 1/2 in. Bentonite pellets ☒ 32
Other ☐ __

7. Fine sand material: Manufacturer, product name and mesh size
NA
Volume added NA ft³

8. Filter pack material: Manufacturer, product name and mesh size
Red Flint, Silica Filter Sand
Volume added ≈ 28 ft³

9. Well casing: Flush threaded PVC schedule 40 ☐ 23; Flush threaded PVC schedule 80 ☒ 24; Other ☐ __

10. Screen material: Schedule 80 PVC
Screen type: Factory cut ☒ 11; Continuous slot ☐ 01; Other ☐ __
Manufacturer Lines
Slot size: 0.010 in.
Slotted length: 20.0 ft.

11. Backfill material (below filter pack): None ☐; Other ☒
Native sand

I certify that the information on this form is true and correct to the best of my knowledge.

Signature: [signature]

Firm: E. C. Jordan Co.

Please complete and return both sides of this form as required by chs. 144, 147 and 160, Wis. Stats., and ch. NR 141, Wis. Adm. Code. In accordance with ch. 144, Wis Stats., failure to file this form may result in a forfeiture of not less than $10, nor more than $5,000 for each day of violation. In accordance with ch. 147, Wis. Stats., failure to file this form may result in a forfeiture of not more than $10,000 for each day of violation.

NOTE: Shaded areas are for DNR use only. See instructions for more information.

State of Wisconsin
Department of Natural Resources

MONITORING WELL CONSTRUCTION
Form 4400-113A
8-89

| | | |
|---|---|---|
| Facility/Project Name: Badger Army Ammunition Plant | Grid Location: 4,802,958.1 M ☒ N. ☐ S.; 299,468.6 M ☒ E. ☐ W. | Well Name: GON-89-02A #457 |
| License, Permit or Monitoring Number: _____ | | Wis. Unique Well Number: _____ DNR Well Number: _____ |
| Type of Well: Water Table Observation Well ☒ 11; Piezometer ☐ 12 | Section Location: ____ 1/4 of ____ 1/4 of Section ____, T ____ N, R ____ ☐ E ☐ W | Date Well Installed: 02/19/89 (m m d d y y) |
| Distance Well Is From Waste/Source Boundary: NA ft. | | Well Installed By: (Person's Name and Firm) Dave H. Belan / E.C Jordan Co. |
| Is Well A Point of Enforcement Std. Application? ☐ Yes ☒ No | Location of Well Relative to Waste/Source: ☐ Upgradient ☐ Sidegradient ☐ Downgradient ☐ Not Known | |

A. Protective pipe, top elevation 920.24 ft. MSL
B. Well casing, top elevation 920.59 ft. MSL
C. Land surface elevation 918.5 ft MSL
D. Surface seal, bottom _____ ft. MSL or _____ ft.

12. USCS classification of soil near screen:
☐ GP ☐ GM ☐ GC ☐ GW ☐ SW ☒ SP
☐ SM ☐ SC ☐ ML ☐ MH ☐ CL ☐ CH
☐ Bedrock

13. Sieve analysis attached? ☐ Yes ☒ No

14. Drilling method used: Rotary ☐ 50; Hollow Stem Auger ☐ 41; Other ☒ ___
Dual Wall

15. Drilling fluid used: Water ☐ 02; Air ☐ 01; Drilling Mud ☐ 03; None ☒ 99

16. Drilling additives used? ☐ Yes ☒ No
Describe _____

17. Source of water (attach analysis):
PW #2

E. Bentonite seal, top 122.5 ft. MSL or 126.0 ft.
F. Fine sand, top NA ft. MSL or NA ft.
G. Filter pack, top 125.7 ft. MSL or 132.5 ft.
H. Well screen, top 129.5 ft. MSL or 139.0 ft.
Well screen, bottom 159.5 ft. MSL or 159.0 ft.
Filter pack, bottom 159.5 ft. MSL or 159.0 ft.
J. Borehole, bottom 158.5 ft. MSL or 160.0 ft.
K. Borehole, diameter 9.5 in.
L. O.D. well casing 4.5 in.
M. I.D. well casing 4.0 in.

1. Cap and lock? ☒ Yes ☐ No
2. Protective cover pipe:
a. Inside diameter: 6.6 in.
b. Length: 2.0 ft.
c. Material: Steel ☒ 04; Other ☐ __
d. Additional protection? ☒ Yes ☐ No
If yes, describe: 4 bucking posts
3. Surface seal: Bentonite ☐ 30; Concrete ☐ 01; Other ☒ __
Grout
4. Material between well casing and protective pipe: Bentonite ☐ 30; Annular space seal ☐; Other ☒ __
Grout
5. Annular space seal: Granular Bentonite ☐ 33
____ Lbs/gal mud weight . . . Bentonite-sand slurry ☐ 35
____ Lbs/gal mud weight . . . . . Bentonite slurry ☐ 31
5 % Bentonite . . . . . Bentonite-cement grout ☒ 50
≈ 760 gal/ft volume added for any of the above
How installed: Tremie ☐ 01; Tremie pumped ☒ 02; Gravity ☐ 08
6. Bentonite seal: Bentonite granules ☐ 33
☐ 1/4 in. ☒ 3/8 in. ☐ 1/2 in. Bentonite pellets ☒ 32
Other ☐ __
7. Fine sand material: Manufacturer, product name and mesh size
NA
Volume added NA ft³
8. Filter pack material: Manufacturer, product name and mesh size
Red Flint, Silica Filter Sand
Volume added ≈ 2.9 ft³
9. Well casing: Flush threaded PVC schedule 40 ☐ 23; Flush threaded PVC schedule 80 ☒ 24; Other ☐ __
10. Screen material: Schedule 80 PVC
Screen type: Factory cut ☒ 11; Continuous slot ☐ 01; Other ☐ __
Manufacturer Timco
Slot size: 0.___ in.
Slotted length: ___ ft.
11. Backfill material (below filter pack): None ☐; Other ☒
Native cave

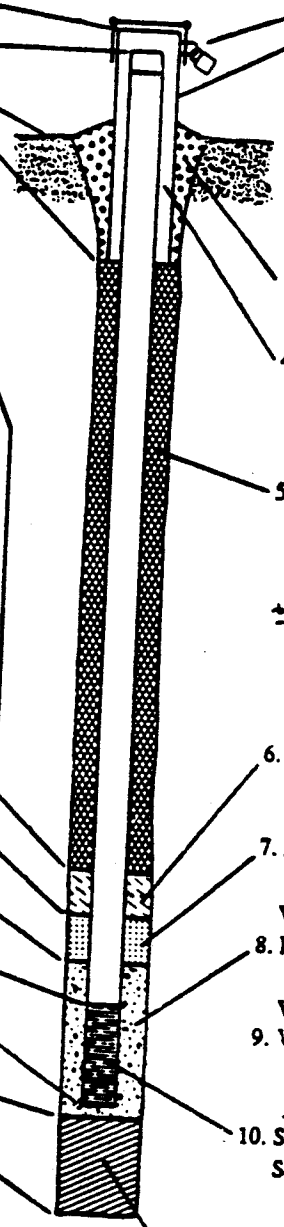

I certify that the information on this form is true and correct to the best of my knowledge.

Signature: Paul R. Bol
Firm: E.C Jordan Co

Please complete and return both sides of this form as required by chs. 144, 147 and 160, Wis. Stats., and ch. NR 141, Wis. Adm. Code. In accordance with ch. 144, Wis Stats., failure to file this form may result in a forfeiture of not less than $10, nor more than $5,000 for each day of violation. In accordance with ch. 147, Wis. Stats., failure to file this form may result in a forfeiture of not more than $10,000 for each day of violation.
NOTE: Shaded areas are for DNR use only. See instructions for more information.

State of Wisconsin
Department of Natural Resources

# MONITORING WELL CONSTRUCTION
Form 4400-113A 8-89

| | | |
|---|---|---|
| Facility/Project Name: Badger Army Ammunition Plant | Grid Location: 4,803,093.4 m N. ☒ N. ☐ S. / 277,471.9 m E. ☒ E. ☐ W. | Well Name: LOM-89-01 #456 |
| License, Permit or Monitoring Number: | | Wis. Unique Well Number / DNR Well Number |
| Type of Well: Water Table Observation Well ☒ 11; Piezometer ☐ 12 | Section Location: ____ 1/4 of ____ 1/4 of Section ____, T ____ N, R ____ ☐ E ☐ W | Date Well Installed: 02/12/89 (m m d d y y) |
| Distance Well Is From Waste/Source Boundary: NA ft. | | Well Installed By: (Person's Name and Firm) Dave H. Beken / E.C. Jordan Co. |
| Is Well A Point of Enforcement Std. Application? ☐ Yes ☒ No | Location of Well Relative to Waste/Source: ☐ Upgradient ☐ Sidegradient ☐ Downgradient ☐ Not Known | |

A. Protective pipe, top elevation 918.18 ft. MSL

B. Well casing, top elevation 912.86 ft. MSL

C. Land surface elevation 915.9 ft. MSL

D. Surface seal, bottom ____ ft. MSL or ____ ft.

12. USCS classification of soil near screen:
☒ GP ☐ GM ☐ GC ☐ GW ☐ SW ☒ SP
☒ SM ☐ SC ☐ ML ☐ MH ☐ CL ☐ CH
☐ Bedrock

13. Sieve analysis attached? ☐ Yes ☒ No

14. Drilling method used: Rotary ☐ 50; Hollow Stem Auger ☐ 41; Other ☒ ____
Dual Well

15. Drilling fluid used: Water ☐ 02; Air ☒ 01; Drilling Mud ☐ 03; None ☐ 99

Drilling additives used? ☐ Yes ☒ No

Describe ____

17. Source of water (attach analysis):
PW #2

E. Bentonite seal, top 291.9 ft. MSL or 124.0 ft.

F. Fine sand, top NA ft. MSL or NA ft.

G. Filter pack, top 286.9 ft. MSL or 129.0 ft.

H. Well screen, top 272.4 ft. MSL or 138.5 ft.

I. Well screen, bottom 252.4 ft. MSL or 158.5 ft.

J. Filter pack, bottom 252.4 ft. MSL or 158.5 ft.

K. Borehole, bottom 252.4 ft. MSL or 158.5 ft.

L. Borehole, diameter 8.5 in.

M. O.D. well casing 4.5 in.

N. I.D. well casing 4.0 in.

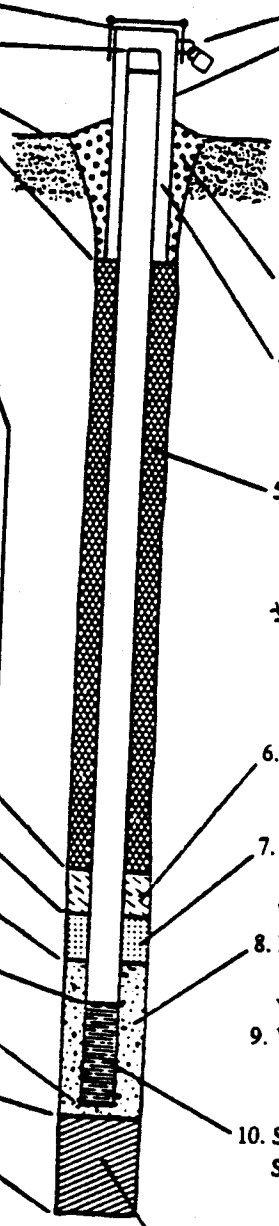

1. Cap and lock? ☒ Yes ☐ No

2. Protective cover pipe:
a. Inside diameter: 6.0 in.
b. Length: 2.0 ft.
c. Material: Steel ☒ 04; Other ☐ ____
d. Additional protection? ☒ Yes ☐ No
If yes, describe: 4 backing posts

3. Surface seal: Bentonite ☐ 30; Concrete ☐ 01; Other ☒ ____
Grout

4. Material between well casing and protective pipe: Bentonite ☐ 30; Annular space seal ☐; Other ☒ ____
Grout

5. Annular space seal: Granular Bentonite ☐ 33
____ Lbs/gal mud weight . . . Bentonite-sand slurry ☐ 35
____ Lbs/gal mud weight . . . . . Bentonite slurry ☐ 31
5 % Bentonite . . . . . Bentonite-cement grout ☒ 50
± 550 gal. volume added for any of the above
How installed: Tremie ☐ 01; Tremie pumped ☒ 02; Gravity ☐ 08

6. Bentonite seal: Bentonite granules ☐ 33
☐ 1/4 in. ☒ 3/8 in. ☐ 1/2 in. Bentonite pellets ☒ 32
Other ☐ ____

7. Fine sand material: Manufacturer, product name and mesh size
NA
Volume added NA ft³

8. Filter pack material: Manufacturer, product name and mesh size
Red Flint, Silica Filter Sand
Volume added ≈ 3.3 ft³

9. Well casing: Flush threaded PVC schedule 40 ☐ 23; Flush threaded PVC schedule 80 ☒ 24; Other ☐ ____

10. Screen material: Schedule 80 PVC
Screen type: Factory cut ☒ 11; Continuous slot ☐ 01; Other ☐ ____
Manufacturer Timco
Slot size: 0.010 in.
Slotted length: 20.0 ft.

11. Backfill material (below filter pack): None ☒; Other ☐ ____

I certify that the information on this form is true and correct to the best of my knowledge.

Sign: Paul L. Bel
Firm: E.C. Jordan Co.

Please complete and return both sides of this form as required by chs. 144, 147 and 160, Wis. Stats., and ch. NR 141, Wis. Adm. Code. In accordance with ch. 144, Wis. Stats., failure to file this form may result in a forfeiture of not less than $10, nor more than $5,000 for each day of violation. In accordance with ch. 147, Wis. Stats., failure to file this form may result in a forfeiture of not more than $10,000 for each day of violation.
NOTE: Shaded areas are for DNR use only. See instructions for more information.

State of Wisconsin
Department of Natural Resources

MONITORING WELL CONSTRUCTION
Form 4400-113A
8-89

| | | |
|---|---|---|
| Facility/Project Name: R. Lake Army Ammunition Plant | Grid Location: 4,603,218.5 m N. ☐ S.; 277,275.5 m E. ☐ W. | Well Name: PBM-89-09 |
| License, Permit or Monitoring Number: ---------- | | Wis. Unique Well Number: ---------- DNR Well Number: --- |
| Type of Well: Water Table Observation Well ☒ 11; Piezometer ☐ 12 | Section Location: ____ 1/4 of ____ 1/4 of Section ____, T ____ N, R ____ ☐ E ☐ W | Date Well Installed: 03/01/89 (m m d d y y) |
| Distance Well Is From Waste/Source Boundary: NA ft. | Location of Well Relative to Waste/Source: ☐ Upgradient ☐ Sidegradient ☐ Downgradient ☐ Not Known | Well Installed By: (Person's Name and Firm) Jeff Pickett / E.C Jordan Co. |
| Is Well A Point of Enforcement Std. Application? ☐ Yes ☒ No | | |

A. Protective pipe, top elevation: 883.64 ft. MSL

B. Well casing, top elevation: 883.48 ft. MSL

C. Land surface elevation: 880.6 ft. MSL

D. Surface seal, bottom: ---- ft. MSL or ---- ft.

12. USCS classification of soil near screen: ☐ GP ☐ GM ☐ GC ☐ GW ☐ SW ☒ SP ☐ SM ☐ SC ☐ ML ☐ MH ☐ CL ☐ CH ☐ Bedrock

13. Sieve analysis attached? ☐ Yes ☒ No

14. Drilling method used: Rotary ☐ 50; Hollow Stem Auger ☒ 41; Other ☐ --

15. Drilling fluid used: Water ☐ 02; Air ☐ 01; Drilling Mud ☐ 03; None ☒ 99

Drilling additives used? ☐ Yes ☒ No

Describe ____

17. Source of water (attach analysis): PW #2

E. Bentonite seal, top: 782.6 ft. MSL or 93.0 ft.

F. Fine sand, top: NA ft. MSL or NA ft.

G. Filter pack, top: 782.6 ft. MSL or 98.0 ft.

H. Well screen, top: 777.6 ft. MSL or 103.0 ft.

I. Well screen, bottom: 757.6 ft. MSL or 123.0 ft.

J. Filter pack, bottom: 757.6 ft. MSL or 123.0 ft.

K. Borehole, bottom: 755.6 ft. MSL or 125.0 ft.

L. Borehole, diameter: 9.5 in.

M. O.D. well casing: 4.5 in.

N. I.D. well casing: 4.0 in.

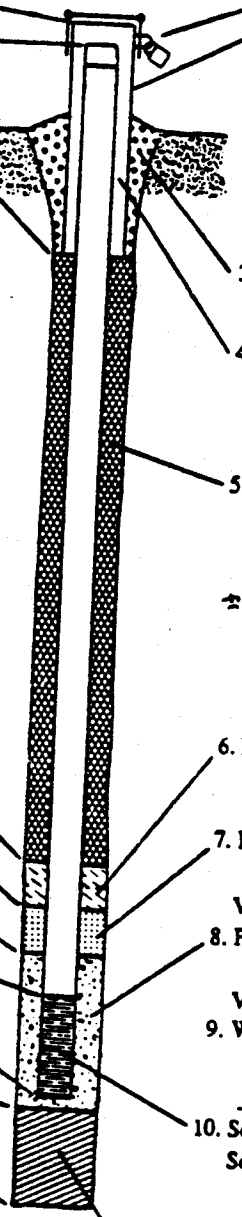

1. Cap and lock? ☒ Yes ☐ No

2. Protective cover pipe:
   a. Inside diameter: 6.0 in.
   b. Length: 2.0 ft.
   c. Material: Steel ☒ 04; Other ☐ --
   d. Additional protection? ☒ Yes ☐ No
   If yes, describe: 4 bucking posts

3. Surface seal: Bentonite ☐ 30; Concrete ☐ 01; Other ☒ --
   Grout

4. Material between well casing and protective pipe: Bentonite ☐ 30; Annular space seal ☐; Other ☒ --
   Grout

5. Annular space seal: Granular Bentonite ☐ 33
   ____ Lbs/gal mud weight . . . Bentonite-sand slurry ☐ 35
   ____ Lbs/gal mud weight . . . . . Bentonite slurry ☐ 31
   5 % Bentonite . . . . . Bentonite-cement grout ☒ 50
   ≈ 900 gal/ft³ volume added for any of the above
   How installed: Tremie ☐ 01; Tremie pumped ☒ 02; Gravity ☐ 08

6. Bentonite seal: Bentonite granules ☐ 33
   ☐ 1/4 in. ☒ 3/8 in. ☐ 1/2 in. Bentonite pellets ☒ 32
   Other ☐ --

7. Fine sand material: Manufacturer, product name and mesh size
   NA
   Volume added NA ft³

8. Filter pack material: Manufacturer, product name and mesh size
   Red Flint Silica Filter Sand
   Volume added ≈ 28 ft³

9. Well casing: Flush threaded PVC schedule 40 ☐ 23; Flush threaded PVC schedule 80 ☒ 24; Other ☐ --

10. Screen material: Schedule 80 PVC
    Screen type: Factory cut ☒ 11; Continuous slot ☐ 01; Other ☐ --
    Manufacturer: Timco
    Slot size: 0.010 in.
    Slotted length: 20.0 ft.

11. Backfill material (below filter pack): None ☐; Other ☒
    Natural cave

I certify that the information on this form is true and correct to the best of my knowledge.

Sign: [signature] Firm: E.C Jordan Co.

Please complete and return both sides of this form as required by chs. 144, 147 and 160, Wis. Stats., and ch. NR 141, Wis. Adm. Code. In accordance with ch. 144, Wis Stats., failure to file this form may result in a forfeiture of not less than $10, nor more than $5,000 for each day of violation. In accordance with ch. 147, Wis. Stats., failure to file this form may result in a forfeiture of not more than $10,000 for each day of violation.

NOTE: Shaded areas are for DNR use only. See instructions for more information.

# WELL DETAIL INFORMATION SHEET

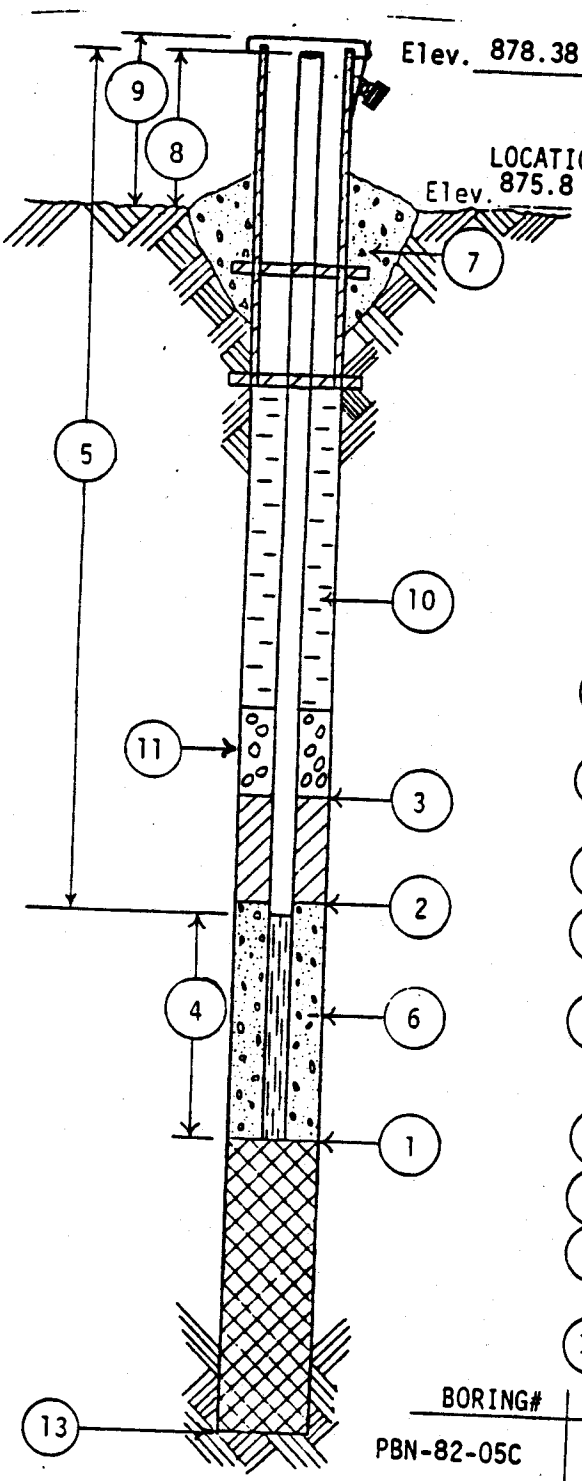


JOB NO. C 10313

BORING NO. PBN-82-05C

DATE 3/11/82

CHIEF Larry F.

LOCATION Badger Army Ammunition Plant; Propellent Burning Grounds

All depth measurements of well detail assumed to be from ground surface unless otherwise indicated.

1. DEPTH TO BOTTOM OF WELL POINT OR SLOTTED PIPE 131 FEET.
2. DEPTH OF BOTTOM OF SEAL (if installed) 122 FEET.
3. DEPTH TO TOP OF SEAL (if installed) 90 FEET.
4. LENGTH OF PVC WELL SCREEN, 2.0 FEET.
5. TOTAL LENGTH OF PIPE 131.5 FEET @ 4 IN. DIAMETER.
6. TYPE OF FILTER MATERIAL AROUND WELL POINT OR SLOTTED PIPE Pea Gravel.
7. CONCRETE CAP, YES NO (Circle One)
8. HEIGHT OF WELL CASING ABOVE GROUND 2.5 FEET.
9. PROTECTIVE CASING? YES NO (Circle One)
   HEIGHT ABOVE GROUND 2.5.
   LOCKING CAP? YES NO (Circle One)
10. TYPE OF BACKFILL: 7:4 Cement: Bentonite
11. THICKNESS OF GRAVEL PACK 9 FEET.
12. DEPTH TO FIRST COUPLING 1:5 FEET.
    COUPLING INTERVAL 9.75 FEET.
13. TOTAL DEPTH OF BOREHOLE 131 FEET.

| BORING# | DATE | TIME | DEPTH TO WATER | REMARKS |
|---|---|---|---|---|
| PBN-82-05C | 5/11/82 | - | 105.64' | From top of casing |

WELL DETAIL INFORMATION SHEET

JOB NO. C 10313
BORING NO. PBN-82-05B
DATE 3/11/82
CHIEF Larry F.
LOCATION Badger Army Ammunition Plant; Propellent Burning Gr

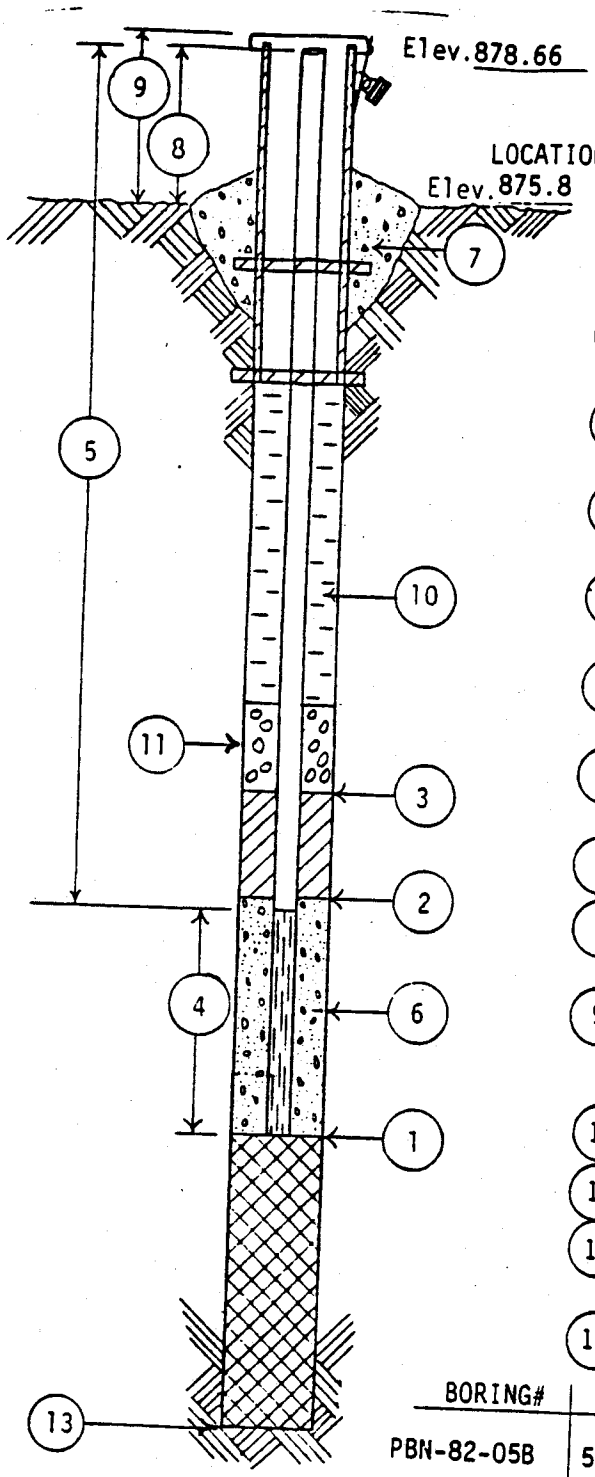


All depth measurements of well detail assumed to be from ground surface unless otherwise indicated.

1. DEPTH TO BOTTOM OF WELL POINT OR SLOTTED PIPE 121.75 FEET.
2. DEPTH OF BOTTOM OF SEAL (if installed) 102 FEET.
3. DEPTH TO TOP OF SEAL (if installed) 80 FEET.
4. LENGTH OF PVC WELL SCREEN, 2.0 FEET.
5. TOTAL LENGTH OF PIPE 122.25 FEET @ 4 IN. DIAMETER.
6. TYPE OF FILTER MATERIAL AROUND WELL POINT OR SLOTTED PIPE Pea Gravel.
7. CONCRETE CAP, YES NO (Circle One)
8. HEIGHT OF WELL CASING ABOVE GROUND 2.5 FEET.
9. PROTECTIVE CASING? YES NO (Circle One)
   HEIGHT ABOVE GROUND 2.5
   LOCKING CAP? YES NO (Circle One)
10. TYPE OF BACKFILL: 5:2 Cement: Bentonite
11. THICKNESS OF GRAVEL PACK 19.75 FEET.
12. DEPTH TO FIRST COUPLING 2.75 FEET.
    COUPLING INTERVAL 9.75 FEET.
13. TOTAL DEPTH OF BOREHOLE 121.75 FEET.

| BORING# | DATE | TIME | DEPTH TO WATER | REMARKS |
|---|---|---|---|---|
| PBN-82-05B | 5/11/82 | - | 105.19' | From top of casi |

# WELL DETAIL INFORMATION SHEET

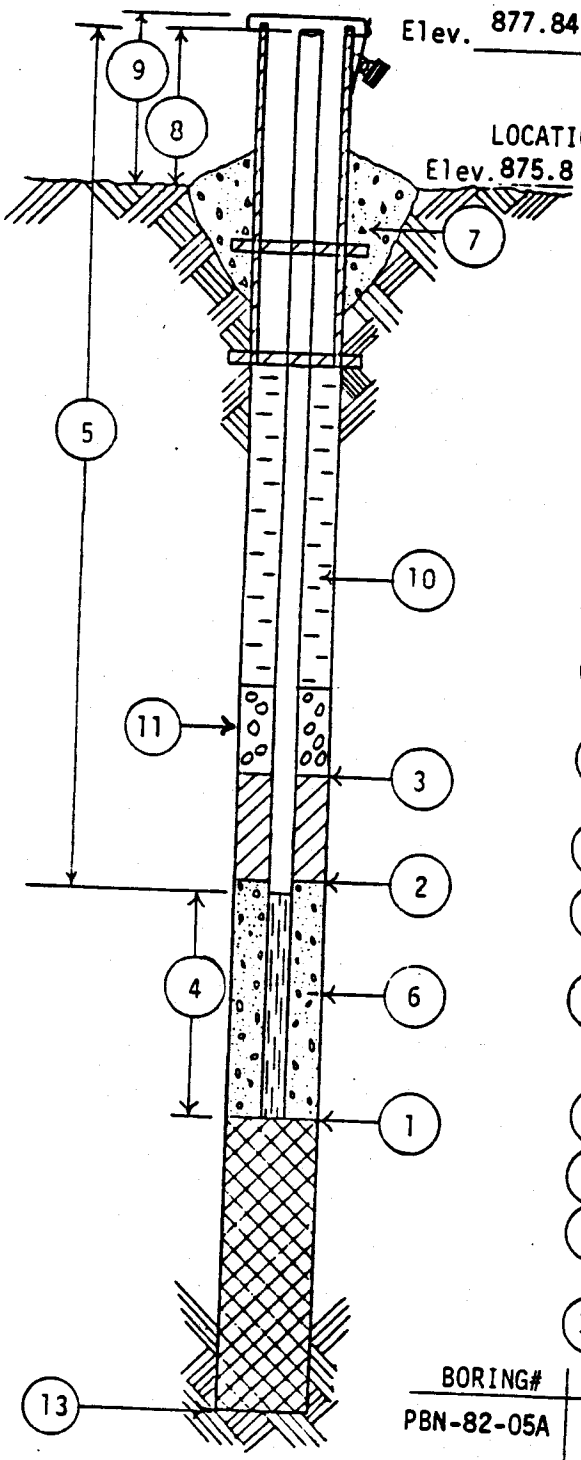


JOB NO. C 10313

BORING NO. PBN-82-05A

DATE 3/13/82

CHIEF LF

LOCATION Badger Army Ammunition Plant; Propellent Burning Grounds

All depth measurements of well detail assumed to be from ground surface unless otherwise indicated.

1. DEPTH TO BOTTOM OF WELL POINT OR SLOTTED PIPE 110 FEET.
2. DEPTH OF BOTTOM OF SEAL (if installed) 100 FEET.
3. DEPTH TO TOP OF SEAL (if installed) 80 FEET.
4. LENGTH OF PVC WELL SCREEN, 10 FEET.
5. TOTAL LENGTH OF PIPE 102.5 FEET @ 4 IN. DIAMETER.
6. TYPE OF FILTER MATERIAL AROUND WELL POINT OR SLOTTED PIPE Pea Gravel.
7. CONCRETE CAP, YES NO (Circle One)
8. HEIGHT OF WELL CASING ABOVE GROUND 2.5 FEET.
9. PROTECTIVE CASING? YES NO (Circle One)
   HEIGHT ABOVE GROUND 2.5.
   LOCKING CAP? YES NO (Circle One)
10. TYPE OF BACKFILL: 5:1 Cement Bentonite Grout
11. THICKNESS OF GRAVEL PACK 10 FEET.
12. DEPTH TO FIRST COUPLING 4 FEET.
    COUPLING INTERVAL 9.75 FEET.
13. TOTAL DEPTH OF BOREHOLE 110 FEET.

| BORING# | DATE | TIME | DEPTH TO WATER | REMARKS |
|---|---|---|---|---|
| PBN-82-05A | 5/11/82 | - | 105.98 | From top of casing |

# WELL DETAIL INFORMATION SHEET

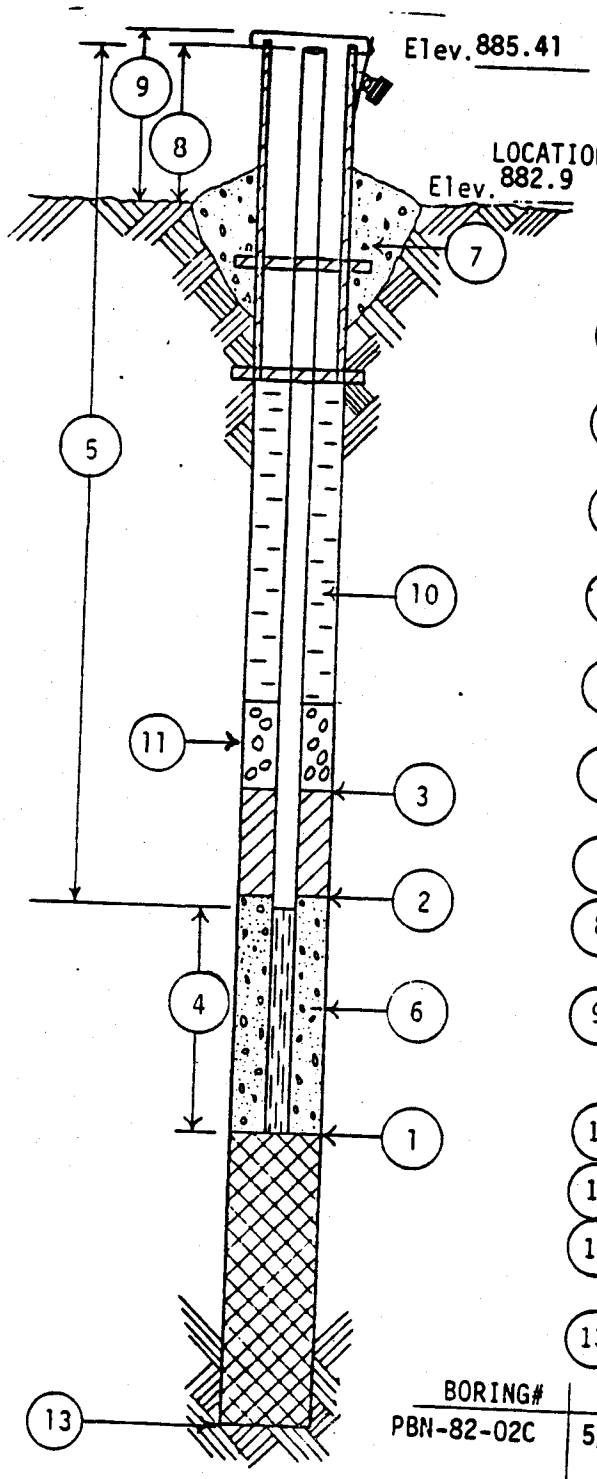


JOB NO. C 10313

BORING NO. PBN-82-02C

DATE 3/8/82

CHIEF Larry F.

LOCATION Badger Army Ammunition Plant; Propellent Burning Grc

All depth measurements of well detail assumed to be from ground surface unless otherwise indicated.

1. DEPTH TO BOTTOM OF WELL POINT OR SLOTTED PIPE 138.7 FEET.
2. DEPTH OF BOTTOM OF SEAL (if installed) 128.5 FEET.
3. DEPTH TO TOP OF SEAL (if installed) 108 FEET.
4. LENGTH OF PVC WELL SCREEN, 2 FEET.
5. TOTAL LENGTH OF PIPE 139.2 FEET @ 4 IN. DIAMETER.
6. TYPE OF FILTER MATERIAL AROUND WELL POINT OR SLOTTED PIPE Pea Gravel.
7. CONCRETE CAP, YES NO (Circle One)
8. HEIGHT OF WELL CASING ABOVE GROUND 2.5 FEET.
9. PROTECTIVE CASING? YES NO (Circle One)
   HEIGHT ABOVE GROUND 2.5.
   LOCKING CAP? YES NO (Circle One).
10. TYPE OF BACKFILL: 7:1 Cement: Bentonite
11. THICKNESS OF GRAVEL PACK 10.2 FEET.
12. DEPTH TO FIRST COUPLING 1.75 FEET.
    COUPLING INTERVAL 9.75 FEET.
13. TOTAL DEPTH OF BOREHOLE 138.7 FEET.

| BORING# | DATE | TIME | DEPTH TO WATER | REMARKS |
|---|---|---|---|---|
| PBN-82-02C | 5/11/82 | - | 111.18' | From top of casing |

WELL DETAIL INFORMATION SHEET

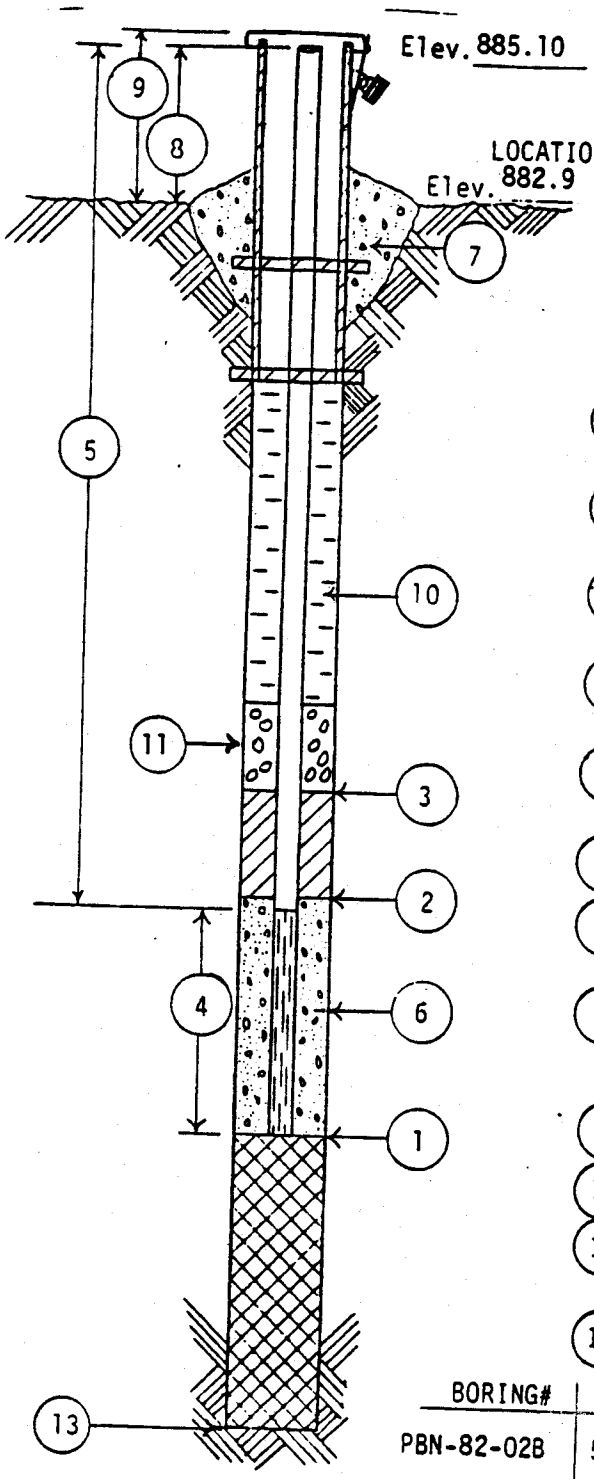


JOB NO. C 10313

BORING NO. PBN-82-02B

DATE 3/9/82

CHIEF LF

LOCATION Badger Army Ammunition Plant; Propellent Burning Grounds

All depth measurements of well detail assumed to be from ground surface unless otherwise indicated.

1. DEPTH TO BOTTOM OF WELL POINT OR SLOTTED PIPE 129.5 FEET.
2. DEPTH OF BOTTOM OF SEAL (if installed) 118 FEET.
3. DEPTH TO TOP OF SEAL (if installed) 80 FEET.
4. LENGTH OF PVC WELL SCREEN, 2 FEET.
5. TOTAL LENGTH OF PIPE 130 FEET @ 4 IN. DIAMETER.
6. TYPE OF FILTER MATERIAL AROUND WELL POINT OR SLOTTED PIPE Pea Gravel
7. CONCRETE CAP, YES NO (Circle One)
8. HEIGHT OF WELL CASING ABOVE GROUND 2.5 FEET.
9. PROTECTIVE CASING? YES NO (Circle One)
   HEIGHT ABOVE GROUND 2.5.
   LOCKING CAP? YES NO (Circle One)
10. TYPE OF BACKFILL: 5:1 Cement: Bentonite
11. THICKNESS OF GRAVEL PACK 11.5 FEET.
12. DEPTH TO FIRST COUPLING .75 FEET.
    COUPLING INTERVAL 9.75 FEET.
13. TOTAL DEPTH OF BOREHOLE 129.5 FEET.

| BORING# | DATE | TIME | DEPTH TO WATER | REMARKS |
|---|---|---|---|---|
| PBN-82-02B | 5/11/82 | - | 110.78' | From top of casing |

WELL DETAIL INFORMATION SHEET

JOB NO. C 10313
BORING NO. PBN-82-02A
DATE 5/1/82
CHIEF Tom O.
LOCATION Badger Army Ammunition Plant; Propellent Burning Grou

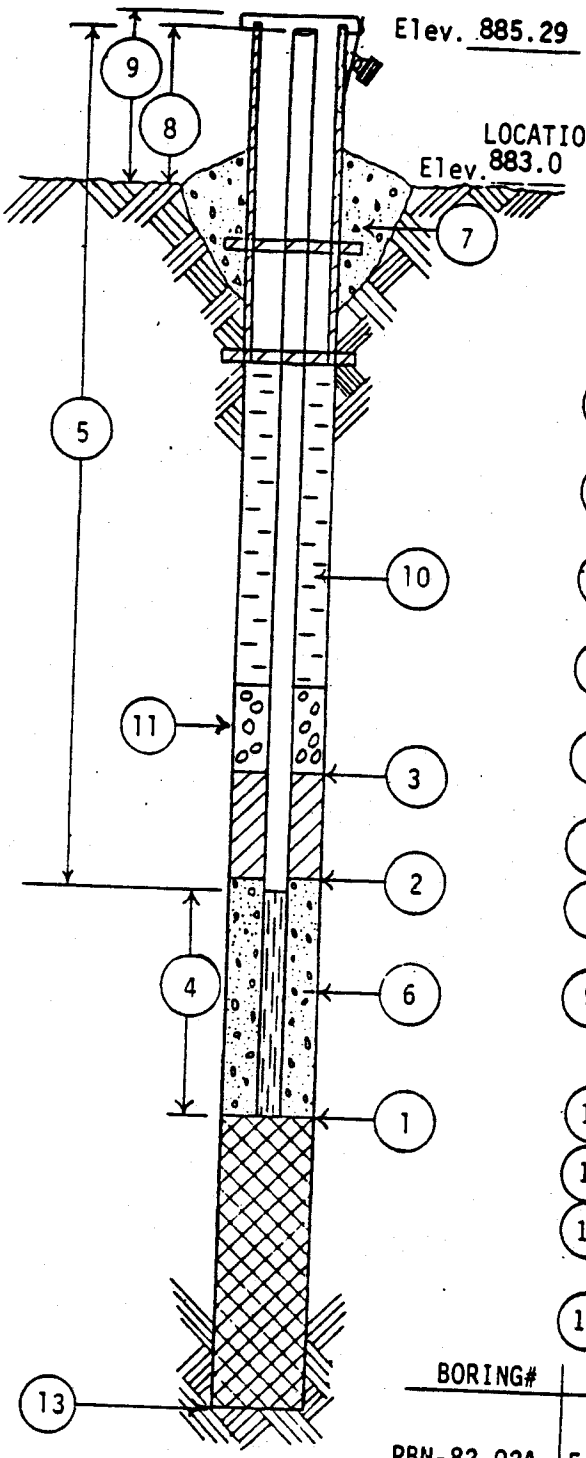


All depth measurements of well detail assumed to be from ground surface unless otherwise indicated.

1. DEPTH TO BOTTOM OF WELL POINT OR SLOTTED PIPE 116 FEET.
2. DEPTH OF BOTTOM OF SEAL (if installed) 97 FEET.
3. DEPTH TO TOP OF SEAL (if installed) 77 FEET.
4. LENGTH OF PVC WELL SCREEN, 10 FEET.
5. TOTAL LENGTH OF PIPE 108.50 FEET @ 4 IN. DIAMETER.
6. TYPE OF FILTER MATERIAL AROUND WELL POINT OR SLOTTED PIPE Pea Gravel.
7. CONCRETE CAP, YES NO (Circle One)
8. HEIGHT OF WELL CASING ABOVE GROUND 2.5 FEET.
9. PROTECTIVE CASING? YES NO (Circle One)
   HEIGHT ABOVE GROUND 2.5.
   LOCKING CAP? YES NO (Circle One)
10. TYPE OF BACKFILL: 5:2 Cement:Bentonite
11. THICKNESS OF GRAVEL PACK 19 FEET.
12. DEPTH TO FIRST COUPLING 8.75 FEET.
    COUPLING INTERVAL 9.75 FEET.
13. TOTAL DEPTH OF BOREHOLE 116 FEET.

| BORING# | DATE | TIME | DEPTH TO WATER | REMARKS |
|---|---|---|---|---|
| PBN-82-02A | 5/11/82 | - | 111.11' | From top of casing |

# WELL DETAIL INFORMATION SHEET

JOB NO. C 10313

BORING NO. PBN-82-01C

DATE 3/10/82

CHIEF LF

LOCATION Badger Army Ammunition Plant; Propellent Burning Grounds

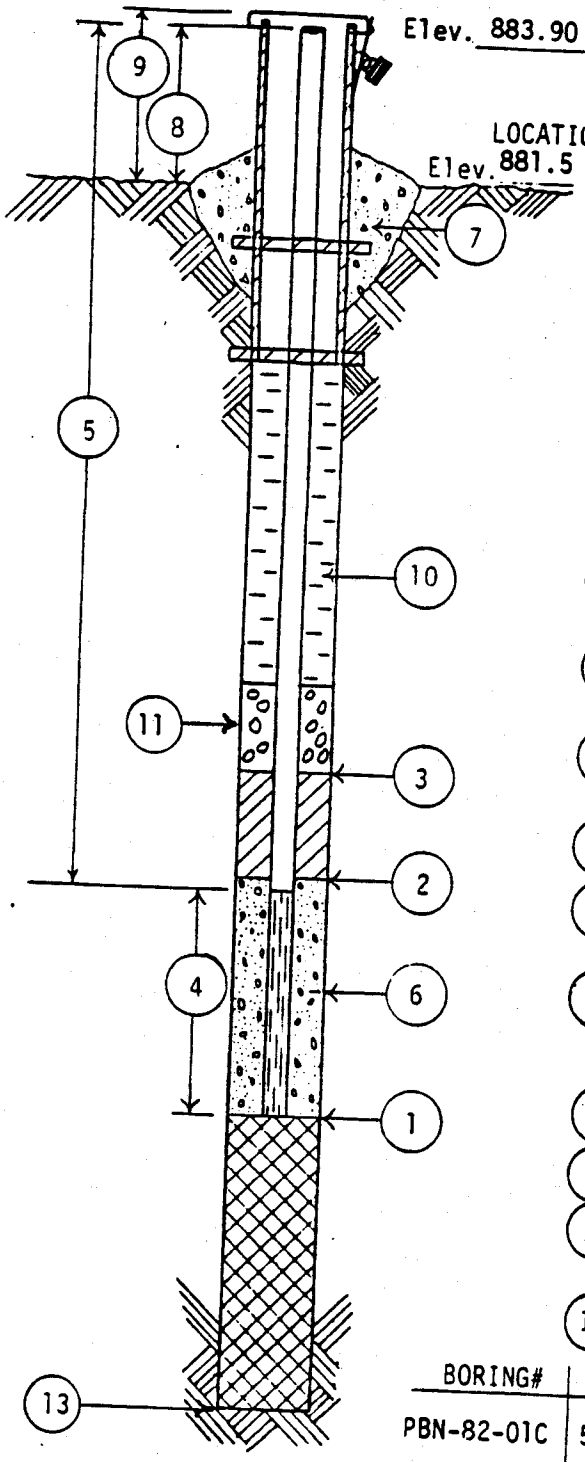


All depth measurements of well detail assumed to be from ground surface unless otherwise indicated.

1. DEPTH TO BOTTOM OF WELL POINT OR SLOTTED PIPE 138.5 FEET.
2. DEPTH OF BOTTOM OF SEAL (if installed) 106 FEET.
3. DEPTH TO TOP OF SEAL (if installed) 68 FEET.
4. LENGTH OF PVC WELL SCREEN, 2 FEET.
5. TOTAL LENGTH OF PIPE 139 FEET @ 4 IN. DIAMETER.
6. TYPE OF FILTER MATERIAL AROUND WELL POINT OR SLOTTED PIPE Pea Gravel.
7. CONCRETE CAP, YES NO (Circle One)
8. HEIGHT OF WELL CASING ABOVE GROUND 2.5 FEET.
9. PROTECTIVE CASING? YES NO (Circle One)
   HEIGHT ABOVE GROUND 2.5.
   LOCKING CAP? YES NO (Circle One)
10. TYPE OF BACKFILL: 8:3 Cement: Bentonite
11. THICKNESS OF GRAVEL PACK 32.5 FEET.
12. DEPTH TO FIRST COUPLING 0 FEET.
    COUPLING INTERVAL 9.75 FEET.
13. TOTAL DEPTH OF BOREHOLE 138.5 FEET.

| BORING# | DATE | TIME | DEPTH TO WATER | REMARKS |
|---|---|---|---|---|
| PBN-82-01C | 5/11/82 | - | 108.88' | From top of casing |

WELL DETAIL INFORMATION SHEET

JOB NO. C 10313
BORING NO. PBN-82-01B
DATE 3/10/82
CHIEF LF
LOCATION Badger Army Ammunition Plant: Propellent Burning Gro

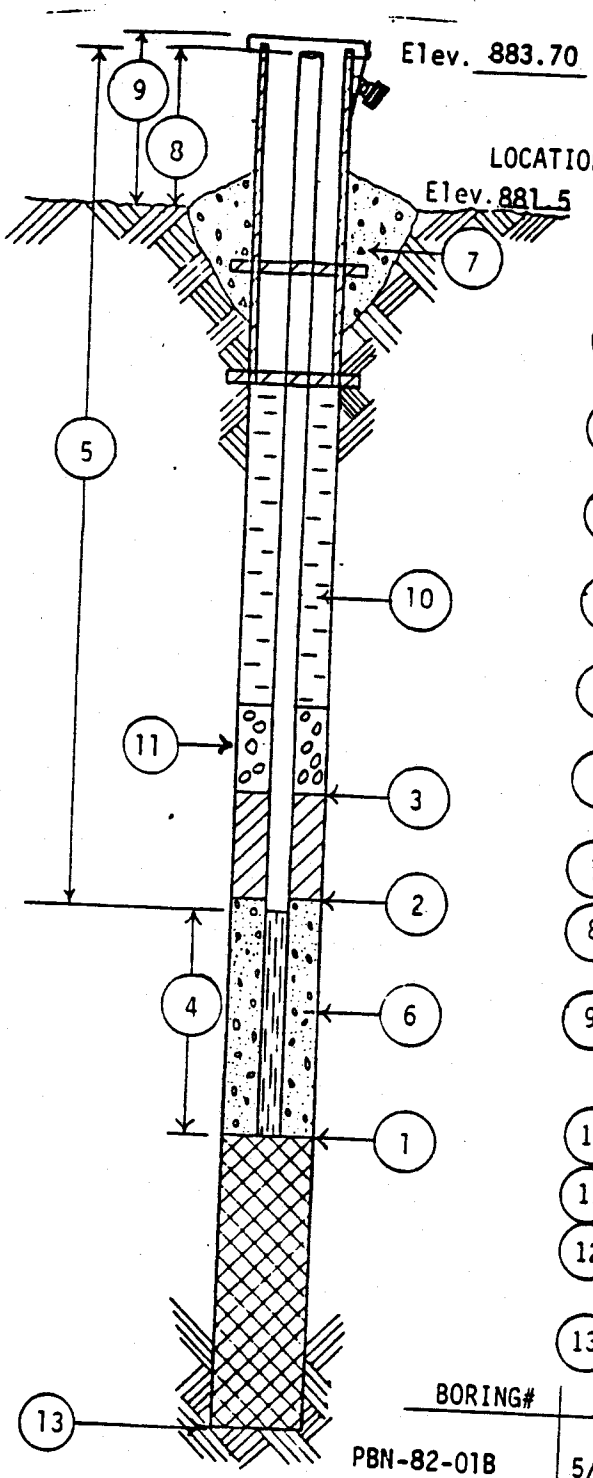


All depth measurements of well detail assumed to be from ground surface unless otherwise indicated.

1. DEPTH TO BOTTOM OF WELL POINT OR SLOTTED PIPE 129 FEET.
2. DEPTH OF BOTTOM OF SEAL (if installed) 111.5 FEET.
3. DEPTH TO TOP OF SEAL (if installed) 82 FEET.
4. LENGTH OF PVC WELL SCREEN, 2 FEET.
5. TOTAL LENGTH OF PIPE 129.5 FEET @ 4 IN. DIAMETER.
6. TYPE OF FILTER MATERIAL AROUND WELL POINT OR SLOTTED PIPE Pea Gravel.
7. CONCRETE CAP, YES NO (Circle One)
8. HEIGHT OF WELL CASING ABOVE GROUND 2.5 FEET.
9. PROTECTIVE CASING? YES NO (Circle One)
   HEIGHT ABOVE GROUND 2.5.
   LOCKING CAP? YES NO (Circle One)
10. TYPE OF BACKFILL: 5:2 Cement: Bentonite
11. THICKNESS OF GRAVEL PACK 17.5 FEET.
12. DEPTH TO FIRST COUPLING 0 FEET.
    COUPLING INTERVAL 9.75 FEET.
13. TOTAL DEPTH OF BOREHOLE 129 FEET.

| BORING# | DATE | TIME | DEPTH TO WATER | REMARKS |
|---|---|---|---|---|
| PBN-82-01B | 5/11/82 | - | 108.67' | From top of casing |

WELL DETAIL INFORMATION SHEET

JOB NO. C 10313

BORING NO. PBN-82-01A

DATE 3/18/82

CHIEF LF

LOCATION Badger Army Ammunition Plant: Propellent Burning Ground

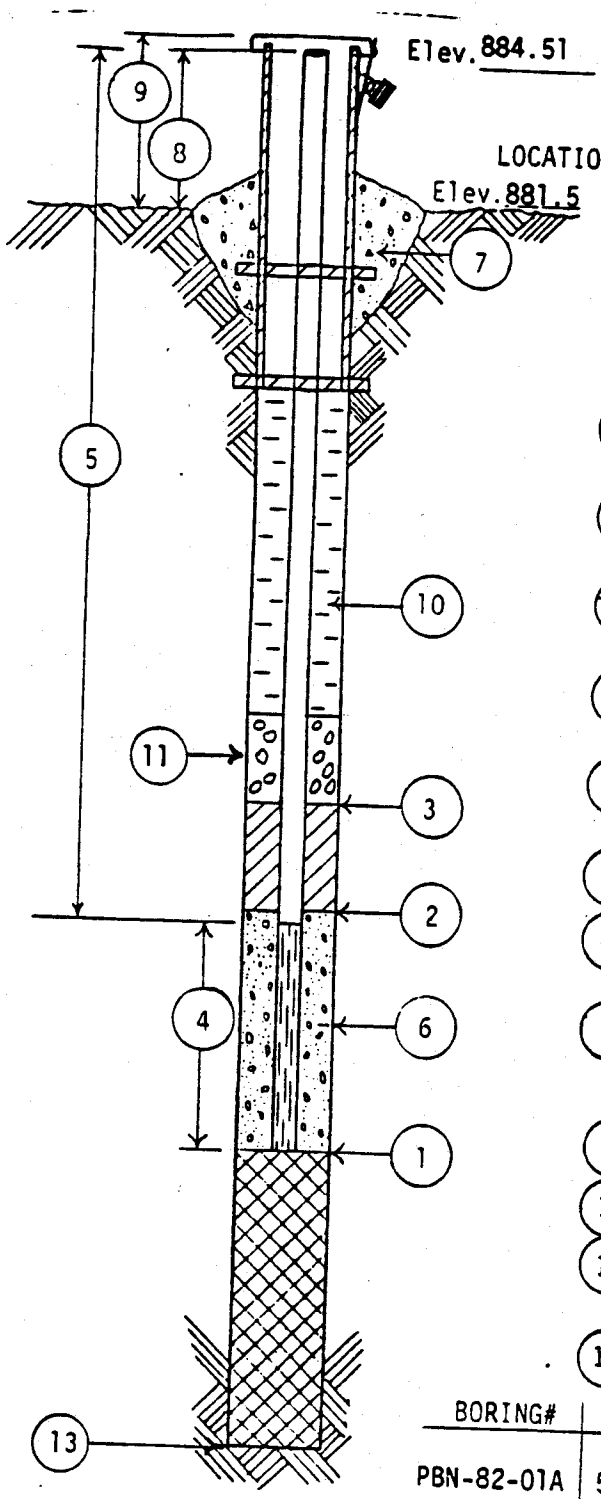


All depth measurements of well detail assumed to be from ground surface unless otherwise indicated.

1. DEPTH TO BOTTOM OF WELL POINT OR SLOTTED PIPE 115.25 FEET.
2. DEPTH OF BOTTOM OF SEAL (if installed) 93 FEET.
3. DEPTH TO TOP OF SEAL (if installed) 73 FEET.
4. LENGTH OF PVC WELL SCREEN, 10 FEET.
5. TOTAL LENGTH OF PIPE 107.75 FEET @ 4 IN. DIAMETER.
6. TYPE OF FILTER MATERIAL AROUND WELL POINT OR SLOTTED PIPE Pea Gravel.
7. CONCRETE CAP, YES NO (Circle One)
8. HEIGHT OF WELL CASING ABOVE GROUND 2.5 FEET.
9. PROTECTIVE CASING? YES NO (Circle One)
   HEIGHT ABOVE GROUND 2.5.
   LOCKING CAP? YES NO (Circle One)
10. TYPE OF BACKFILL: 5:1 Cement: Bentonite
11. THICKNESS OF GRAVEL PACK 22.25 FEET.
12. DEPTH TO FIRST COUPLING 8.0 FEET.
    COUPLING INTERVAL 9.75 FEET.
13. TOTAL DEPTH OF BOREHOLE 115.25 FEET.

| BORING# | DATE | TIME | DEPTH TO WATER | REMARKS |
|---|---|---|---|---|
| PBN-82-01A | 5/11/82 | - | 109.51' | From top of casing |

# WELL DETAIL INFORMATION SHEET

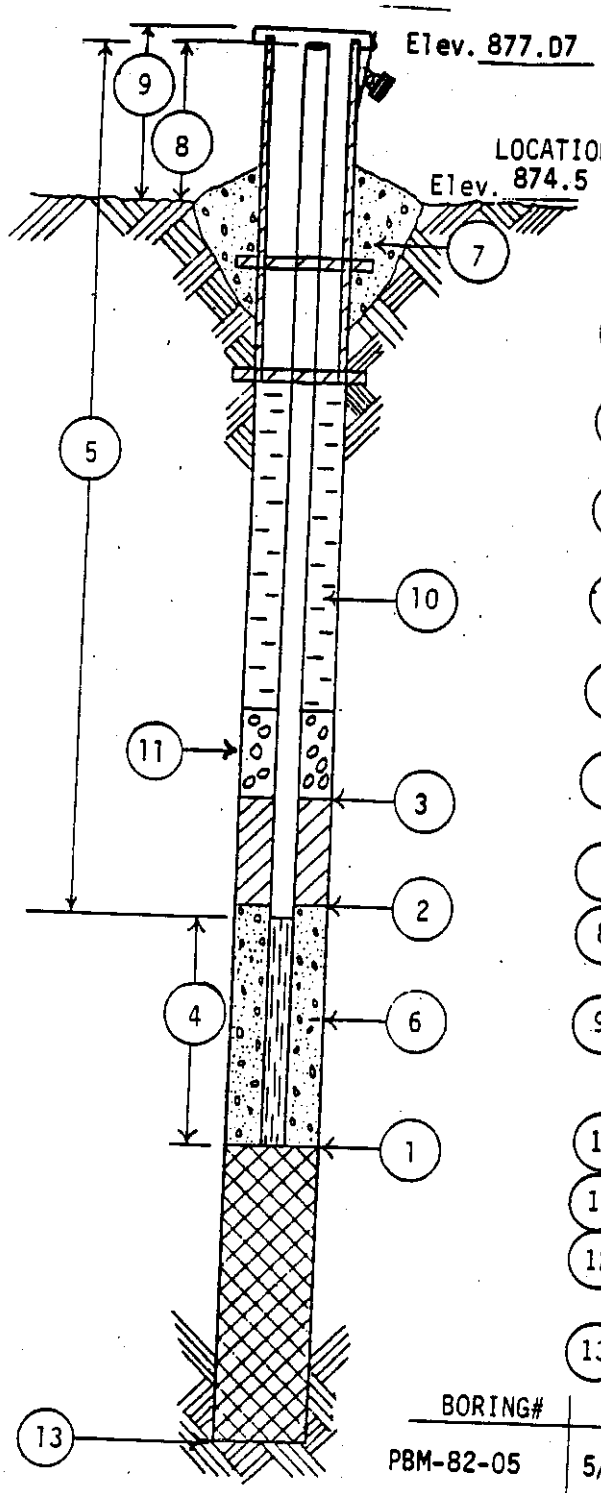


JOB NO. C 10313

BORING NO. PBM-82-05

DATE 5/3/82

CHIEF Tom O.

LOCATION Badger Army Ammunition Plant; Propellent Burning Grou

All depth measurements of well detail assumed to be from ground surface unless otherwise indicated.

1. DEPTH TO BOTTOM OF WELL POINT OR SLOTTED PIPE 121.25 FEET.
2. DEPTH OF BOTTOM OF SEAL (if installed) 85 FEET.
3. DEPTH TO TOP OF SEAL (if installed) 65 FEET.
4. LENGTH OF PVC WELL SCREEN, 20 FEET.
5. TOTAL LENGTH OF PIPE 103.75 FEET @ 4 IN. DIAMETER.
6. TYPE OF FILTER MATERIAL AROUND WELL POINT OR SLOTTED PIPE Pea Gravel.
7. CONCRETE CAP, YES NO (Circle One)
8. HEIGHT OF WELL CASING ABOVE GROUND 2.5 FEET.
9. PROTECTIVE CASING? YES NO (Circle One)
   HEIGHT ABOVE GROUND 2.5
   LOCKING CAP? YES NO (Circle One)
10. TYPE OF BACKFILL: 5:2 Cement:Bentonite
11. THICKNESS OF GRAVEL PACK 36.25 FEET.
12. DEPTH TO FIRST COUPLING 5.5 FEET.
    COUPLING INTERVAL 9.75 FEET.
13. TOTAL DEPTH OF BOREHOLE 121.25 FEET.

| BORING# | DATE | TIME | DEPTH TO WATER | REMARKS |
|---|---|---|---|---|
| PBM-82-05 | 5/11/82 | - | 104.14' | From top of casing |

# WELL DETAIL INFORMATION SHEET

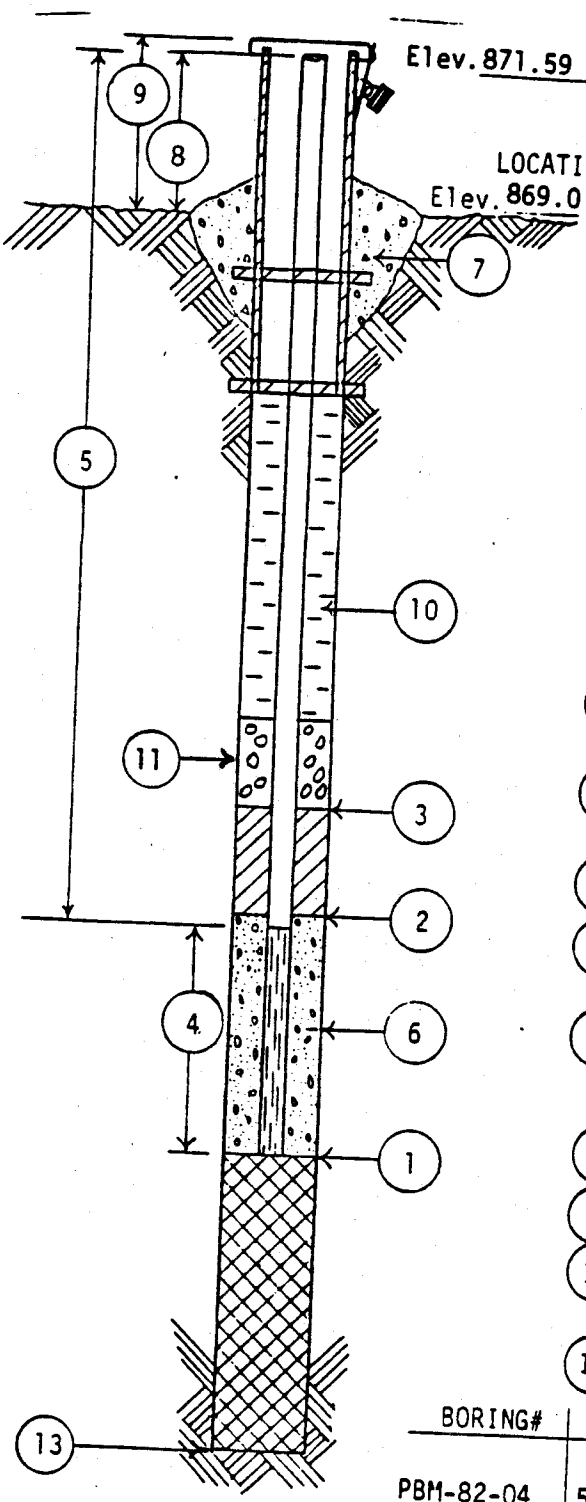


JOB NO. C 10313

BORING NO. PBM-82-04

DATE 3/17/82

CHIEF Larry F.

LOCATION Badger Army Ammunition Plant; Propellent Burning Grounds

All depth measurements of well detail assumed to be from ground surface unless otherwise indicated.

1. DEPTH TO BOTTOM OF WELL POINT OR SLOTTED PIPE 113 FEET.
2. DEPTH OF BOTTOM OF SEAL (if installed) 82 FEET.
3. DEPTH TO TOP OF SEAL (if installed) 58 FEET.
4. LENGTH OF PVC WELL SCREEN, 20 FEET.
5. TOTAL LENGTH OF PIPE 95.5 FEET @ 4 IN. DIAMETER.
6. TYPE OF FILTER MATERIAL AROUND WELL POINT OR SLOTTED PIPE Pea Gravel.
7. CONCRETE CAP, YES NO (Circle One)
8. HEIGHT OF WELL CASING ABOVE GROUND 2.5 FEET.
9. PROTECTIVE CASING? YES NO (Circle One)
   HEIGHT ABOVE GROUND 2.5.
   LOCKING CAP? YES NO (Circle One)
10. TYPE OF BACKFILL: 4:2 Cement: Bentonite
11. THICKNESS OF GRAVEL PACK 31 FEET.
12. DEPTH TO FIRST COUPLING 5.75 FEET.
    COUPLING INTERVAL 9.75 FEET.
13. TOTAL DEPTH OF BOREHOLE 113 FEET.

| BORING# | DATE | TIME | DEPTH TO WATER | REMARKS |
|---|---|---|---|---|
| PBM-82-04 | 5/11/82 | - | 98.63' | From top of casing |

WELL DETAIL INFORMATION SHEET

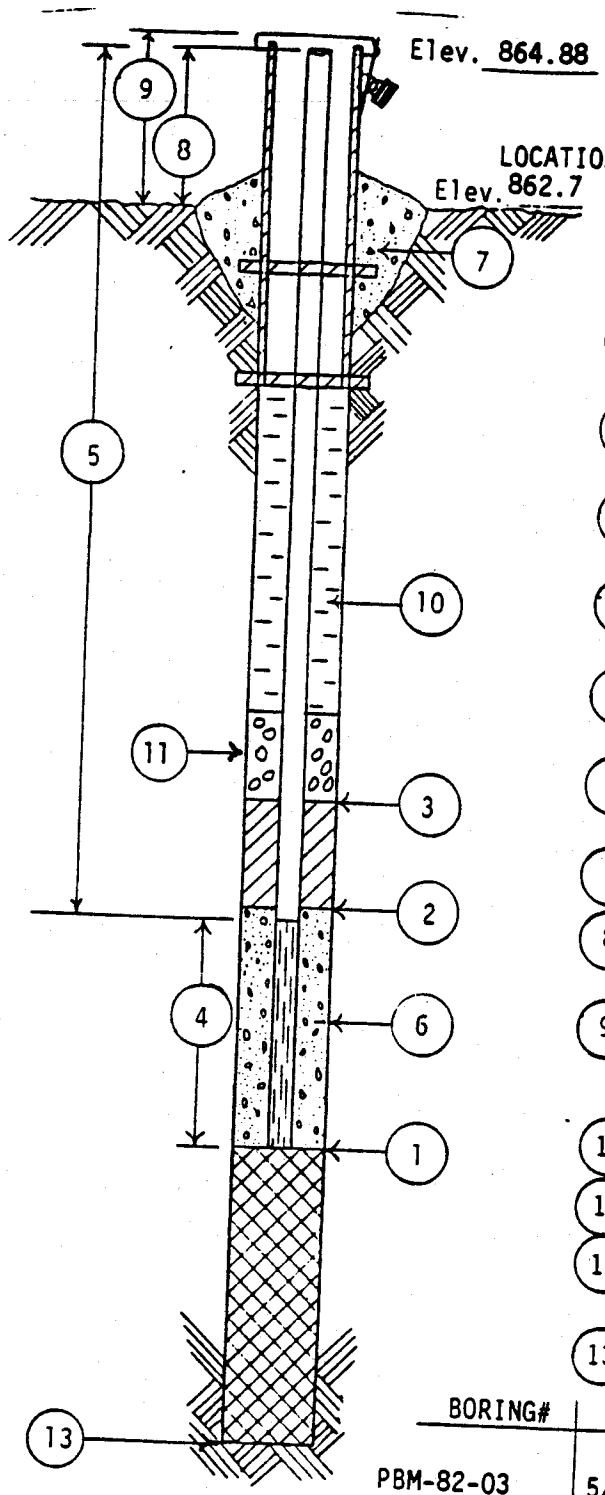


JOB NO. C 10313

BORING NO. PBM-82-03

DATE 3/16/82

CHIEF Larry F.

LOCATION Badger Army Ammunition Plant; Propellent Burning G

All depth measurements of well detail assumed to be from ground surface unless otherwise indicated.

1. DEPTH TO BOTTOM OF WELL POINT OR SLOTTED PIPE 107.25 FEET.
2. DEPTH OF BOTTOM OF SEAL (if installed) 77 FEET.
3. DEPTH TO TOP OF SEAL (if installed) 55 FEET.
4. LENGTH OF PVC WELL SCREEN, 20 FEET.
5. TOTAL LENGTH OF PIPE 89.75 FEET @ 4 IN. DIAMETER.
6. TYPE OF FILTER MATERIAL AROUND WELL POINT OR SLOTTED PIPE Pea Gravel.
7. CONCRETE CAP, YES NO (Circle One)
8. HEIGHT OF WELL CASING ABOVE GROUND 2.5 FEET.
9. PROTECTIVE CASING? YES NO (Circle One)
   HEIGHT ABOVE GROUND 2.5
   LOCKING CAP? YES NO (Circle One)
10. TYPE OF BACKFILL: 4:2 Cement: Bentonite
11. THICKNESS OF GRAVEL PACK 30 FEET.
12. DEPTH TO FIRST COUPLING 0 FEET.
    COUPLING INTERVAL 9.75 FEET.
13. TOTAL DEPTH OF BOREHOLE 107.25 FEET.

| BORING# | DATE | TIME | DEPTH TO WATER | REMARKS |
|---|---|---|---|---|
| PBM-82-03 | 5/11/82 | - | 91.70 | From top of casin |

State of Wisconsin
Department of Natural Resources

Route to: Watershed/Wastewater ☐ Waste Management ☐ Remediation/Redevelopment ☑ Other ☐ _____

# MONITORING WELL CONSTRUCTION
Form 4400-113A Rev. 7-98

| | | |
|---|---|---|
| Facility/Project Name: BAAAP/PBG | Local Grid Location of Well: ____ ft. ☐ N. ☐ S. ____ ft. ☐ E. ☐ W. | Well Name: SCW-2R |
| Facility License, Permit or Monitoring No.: 2814 | Local Grid Origin ☐ (estimated: ☐) or Well Location ☐ Lat. (NAD 83)° ____ " Long. ____ ° ____ ' ____ " or | Wis. Unique Well No.: VW704 / DNR Well ID No.: ___ |
| Facility ID: 157005420 | St. Plane 491430 ft. N, 2035431 ft. E. S/C/N | Date Well Installed: 09/25/2008 (m m / d d / y y y y) |
| Type of Well: Well Code 26 / ew | Section Location of Waste/Source: ____ 1/4 of ____ 1/4 of Sec. ____, T. ____ N, R. ____ ☐ E. ☐ W. | Well Installed By: Name (first, last) and Firm: Todd Schmalfeldt / Boart Longyear E & I |
| Distance from Waste/Source 250 ft. / Enf. Stds. Apply ☑ | Location of Well Relative to Waste/Source: u ☐ Upgradient s ☐ Sidegradient d ☑ Downgradient n ☐ Not Known | Gov. Lot Number: ____ |

A. Protective pipe, top elevation 877.92 ft. MSL

B. Well casing, top elevation _____ ft. MSL

C. Land surface elevation 874.59 ft. MSL

D. Surface seal, bottom _____ ft. MSL or 4 ft.

12. USCS classification of soil near screen:
GP ☑ GM ☐ GC ☐ GW ☐ SW ☐ SP ☑
SM ☐ SC ☐ ML ☐ MH ☐ CL ☐ CH ☐
Bedrock ☐

13. Sieve analysis performed? ☐ Yes ☑ No

14. Drilling method used: Rotary ☑ 50; Hollow Stem Auger ☐ 41; Other ☐ ____

15. Drilling fluid used: Water ☐ 02; Air ☐ 01; Drilling Mud ☑ 03; None ☐ 99

16. Drilling additives used? ☑ Yes ☐ No
Describe: Quick Gel

17. Source of water (attach analysis, if required):
MIRM treated water

E. Bentonite seal, top _____ ft. MSL or 84.0 ft.

F. Fine sand, top _____ ft. MSL or 89.0 ft.

G. Filter pack, top _____ ft. MSL or 92.0 ft.

H. Screen joint, top _____ ft. MSL or 101.0 ft.

I. Well bottom _____ ft. MSL or 167.0 ft.

J. Filter pack, bottom _____ ft. MSL or 168.0 ft.

K. Borehole, bottom _____ ft. MSL or 168.0 ft.

L. Borehole, diameter 12.0 in.

M. O.D. well casing 8.67 in.

N. I.D. well casing 8.06 in.

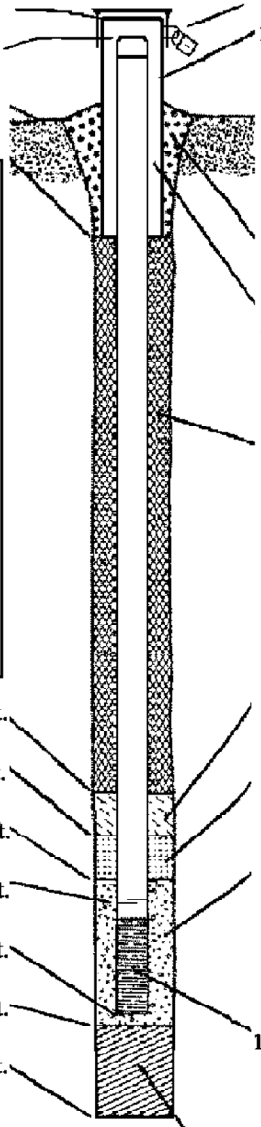

1. Cap and lock? ☑ Yes ☐ No

2. Protective cover pipe:
a. Inside diameter: 12.0 in.
b. Length: 7.0 ft.
c. Material: Steel ☑ 04; Other ☐ ____
d. Additional protection? ☐ Yes ☑ No
If yes, describe: _____

3. Surface seal: Bentonite ☑ 30; Concrete ☐ 01; Other ☐ ____

4. Material between well casing and protective pipe: none
Bentonite ☐ 30; Other ☑ ____

5. Annular space seal: a. Granular/Chipped Bentonite ☐ 33
b. ____ Lbs/gal mud weight . . . Bentonite-sand slurry ☐ 35
c. ____ Lbs/gal mud weight . . . . . Bentonite slurry ☐ 31
d. 4 % Bentonite . . . . . Bentonite-cement grout ☑ 50
e. 200 gal $Ft^3$ volume added for any of the above
f. How installed: Tremie ☐ 01; Tremie pumped ☑ 02; Gravity ☐ 08

6. Bentonite seal: a. Bentonite granules ☐ 33
b. ☐ 1/4 in. ☐ 3/8 in. ☐ 1/2 in. Bentonite chips ☐ 32
c. bentonite slurry Other ☑ ____

7. Fine sand material: Manufacturer, product name & mesh size
a. Badger Mining, silica sand, #40-60 ____
b. Volume added 1.3 $ft^3$

8. Filter pack material: Manufacturer, product name & mesh size
a. Red Flint #40 effective size=0.039 ____
b. Volume added 33 $ft^3$

9. Well casing: Flush threaded PVC schedule 40 ☐ 23; Flush threaded PVC schedule 80 ☐ 24; Other ☑ ____
8-inch carbon steel

10. Screen material: type 304 stainless steel ____
a. Screen type: Factory cut ☐ 11; Continuous slot ☑ 01; Other ☐ ____
8-inch wire wound vee-wire
b. Manufacturer Johnson Screen
c. Slot size: 0.030 in.
d. Slotted length: 61.0 ft.

11. Backfill material (below filter pack): None ☑ 14; Other ☐ ____

I hereby certify that the information on this form is true and correct to the best of my knowledge.

Signature: Joel Janssen (Digitally signed by Joel Janssen, CN=Joel Janssen, O=N/A, OU=SpecPro, Inc., email=jjanssen@specpro-inc.com, Reason: I attest to the accuracy and integrity of this document, Date: 2008.10.15 09:26:12 -05'00')

Firm: SpecPro, Inc.

Please complete both Forms 4400-113A and 4400-113B and return them to the appropriate DNR office and bureau. Completion of these reports is required by chs. 160, 281, 283, 289, 291, 292, 293, 295, and 299, Wis. Stats., and ch. NR 141, Wis. Adm. Code. In accordance with chs. 281, 289, 291, 292, 293, 295, and 299, Wis. Stats., failure to file these forms may result in a forfeiture of between $10 and $25,000, or imprisonment for up to one year, depending on the program and conduct involved. Personally identifiable information on these forms is not intended to be used for any other purpose. NOTE: See the instructions for more information, including where the completed forms should be sent.

State of Wisconsin
Department of Natural Resources

Route to: Watershed/Wastewater ☐ Waste Management ☐ Remediation/Redevelopment ☑ Other ☐ _____

# MONITORING WELL CONSTRUCTION
Form 4400-113A Rev. 7-98

| | | |
|---|---|---|
| Facility/Project Name: Badger AAP | Local Grid Location of Well: ____ ft. ☐ N. ☐ S. ____ ft. ☐ E. ☐ W. | Well Name: PBM-1203 |
| Facility License, Permit or Monitoring No.: 2814 | Local Grid Origin ☐ (estimated: ☐) or Well Location ☐ Lat. (NAD 83)' ____ " Long. ____ ° ____ ' ____ " or | Wis. Unique Well No.: VX884 / DNR Well ID No.: 766 |
| Facility ID: 157053930 | St. Plane 491495.94 ft. N, 2035424.79 ft. E. (S)/C/N | Date Well Installed: 11 / 20 / 2012 (m m d d y y y y) |
| Type of Well: Well Code 11 / MW | Section Location of Waste/Source: ____ 1/4 of ____ 1/4 of Sec. ____, T. ____ N, R. ____ ☐ E. ☐ W. | Well Installed By: Name (first, last) and Firm: Michael Hanson; Layne Christensen Company |
| Distance from Waste/Source ____ ft. Enf. Stds. Apply ☑ | Location of Well Relative to Waste/Source: u ☐ Upgradient s ☐ Sidegradient d ☑ Downgradient n ☐ Not Known; Gov. Lot Number: ____ | |

A. Protective pipe, top elevation ____ ft. MSL

B. Well casing, top elevation 880.18 ft. MSL

C. Land surface elevation 877.69 ft. MSL

D. Surface seal, bottom ____ ft. MSL or 5.0 ft.

12. USCS classification of soil near screen:
GP ☐ GM ☐ GC ☐ GW ☐ SW ☑ SP ☐
SM ☐ SC ☐ ML ☐ MH ☐ CL ☐ CH ☐
Bedrock ☐

13. Sieve analysis performed? ☐ Yes ☑ No

14. Drilling method used: Rotary ☐ 50; Hollow Stem Auger ☐ 41; Other ☑ ____
Rotosonic

15. Drilling fluid used: Water ☑ 02; Air ☐ 01; Drilling Mud ☐ 03; None ☐ 99

16. Drilling additives used? ☐ Yes ☑ No
Describe ____

17. Source of water (attach analysis, if required):
____

E. Bentonite seal, top ____ ft. MSL or 96.4 ft.

F. Fine sand, top ____ ft. MSL or ____ ft.

G. Filter pack, top ____ ft. MSL or 101.4 ft.

H. Screen joint, top ____ ft. MSL or 103.4 ft.

I. Well bottom ____ ft. MSL or 118.4 ft.

J. Filter pack, bottom ____ ft. MSL or 118.4 ft.

K. Borehole, bottom ____ ft. MSL or 118.4 ft.

L. Borehole, diameter 7.0 in.

M. O.D. well casing 2.9 in.

N. I.D. well casing 2.3 in.

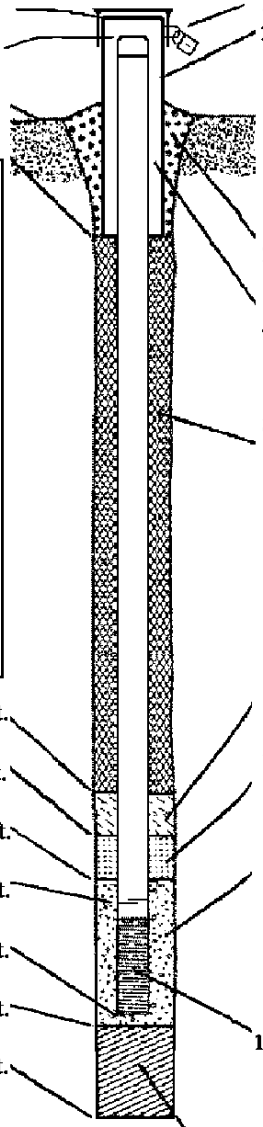

1. Cap and lock? ☑ Yes ☐ No
2. Protective cover pipe:
a. Inside diameter: 8.0 in.
b. Length: 7.0 ft.
c. Material: Steel ☑ 04; Other ☐ ____
d. Additional protection? ☐ Yes ☑ No
If yes, describe: ____
3. Surface seal: Bentonite ☐ 30; Concrete ☑ 01; Other ☐ ____
4. Material between well casing and protective pipe: Bentonite ☐ 30; Other ☑ ____
sand
5. Annular space seal: a. Granular/Chipped Bentonite ☐ 33
b. ____ Lbs/gal mud weight . . . Bentonite-sand slurry ☐ 35
c. 3.5 Lbs/gal mud weight . . . . . Bentonite slurry ☑ 31
d. ____ % Bentonite . . . . . Bentonite-cement grout ☐ 50
e. 150 gal $Ft^3$ volume added for any of the above
f. How installed: Tremie ☑ 01; Tremie pumped ☐ 02; Gravity ☐ 08
6. Bentonite seal: a. Bentonite granules ☐ 33
b. ☐ 1/4 in. ☑ 3/8 in. ☐ 1/2 in. Bentonite chips ☑ 32
c. ____ Other ☐ ____
7. Fine sand material: Manufacturer, product name & mesh size
a. ____
b. Volume added ____ $ft^3$
8. Filter pack material: Manufacturer, product name & mesh size
a. Red Flint #15
b. Volume added 4 bags $ft^3$
9. Well casing: Flush threaded PVC schedule 40 ☐ 23; Flush threaded PVC schedule 80 ☑ 24; Other ☐ ____
10. Screen material: same as above
a. Screen type: Factory cut ☑ 11; Continuous slot ☐ 01; Other ☐ ____
b. Manufacturer Campbell Monoflex
c. Slot size: 0.010 in.
d. Slotted length: 15.0 ft.
11. Backfill material (below filter pack): None ☑ 14; Other ☐ ____

I hereby certify that the information on this form is true and correct to the best of my knowledge.

Signature Joel Janssen | Firm BTS, LLC

Please complete both Forms 4400-113A and 4400-113B and return them to the appropriate DNR office and bureau. Completion of these reports is required by chs. 160, 281, 283, 289, 291, 292, 293, 295, and 299, Wis. Stats., and ch. NR 141, Wis. Adm. Code. In accordance with chs. 281, 289, 291, 292, 293, 295, and 299, Wis. Stats., failure to file these forms may result in a forfeiture of between $10 and $25,000, or imprisonment for up to one year, depending on the program and conduct involved. Personally identifiable information on these forms is not intended to be used for any other purpose. NOTE: See the instructions for more information, including where the completed forms should be sent.

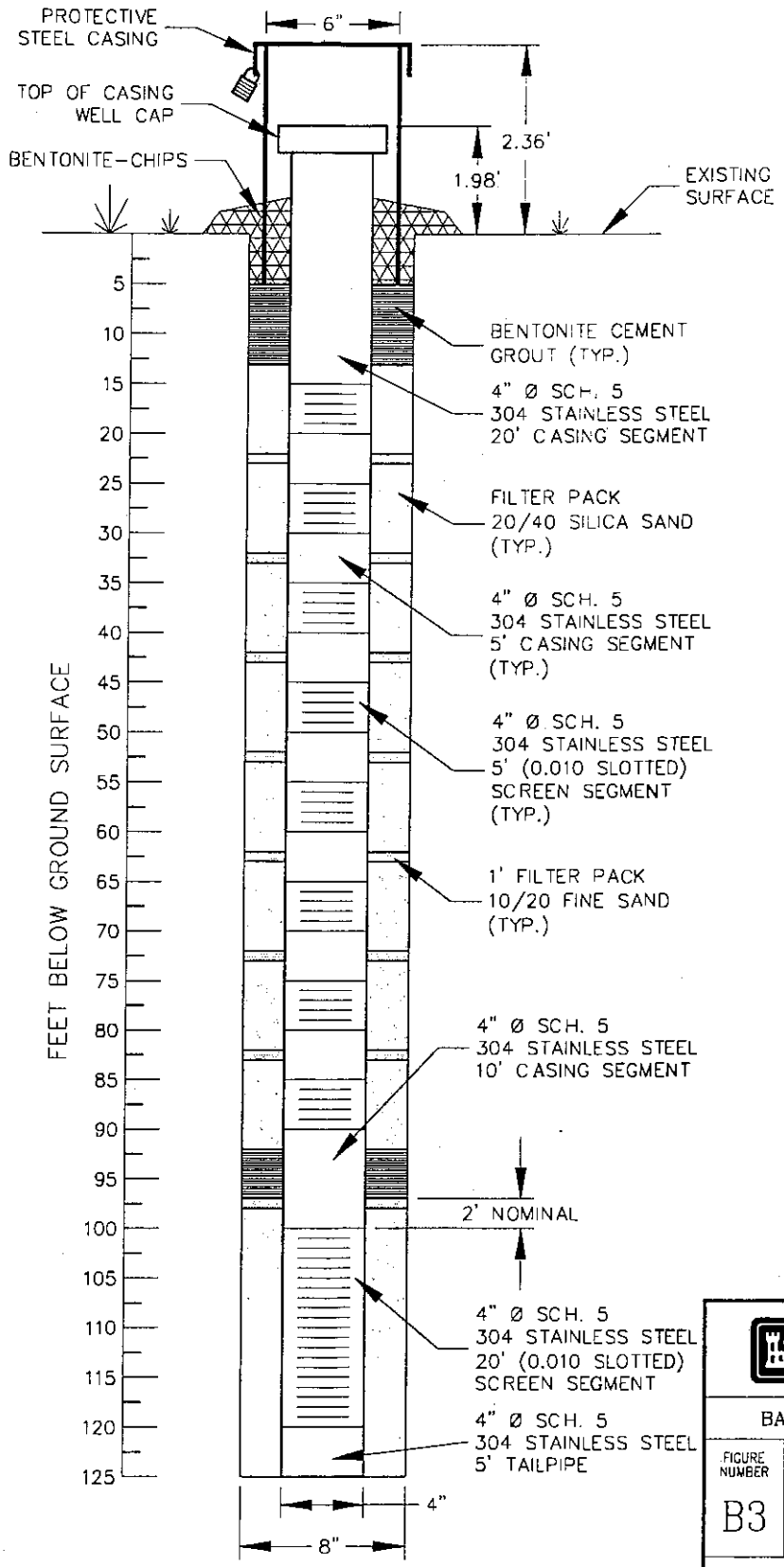


WELL: PBM9903
COMPLETION DATE: 6/11/99

| REVISION | DESCRIPTION | CHKD | APPR | DATE |
|---|---|---|---|---|
| 1 | PER ARMY COMMENTS | PML | PML | 10-13-99 |
| 0 | ORIGINAL ISSUE | PML | PML | 09/08/99 |

| | BY | DATE | | BY | DATE | | BY | DATE | | BY | DATE |
|---|---|---|---|---|---|---|---|---|---|---|---|
| DSGN | ABE | 08/23/99 | DRAWN | JPS | 08/23/99 | CHKD | PML | 09/08/99 | APPR | PML | 09/08/99 |

U.S. ARMY
CORPS OF ENGINEERS
OMAHA DISTRICT

BADGER ARMY AMMUNITION PLANT

FIGURE NUMBER B3

PROPELLENT BURNING GROUND
PBM9903 ACTUAL DESIGN

STONE & WEBSTER ENVIRONMENTAL TECHNOLOGY & SERVICES

| PROJECT NO. | REV. | FILE NAME |
|---|---|---|
| 08786.0530 | 1 | 8786A040 |

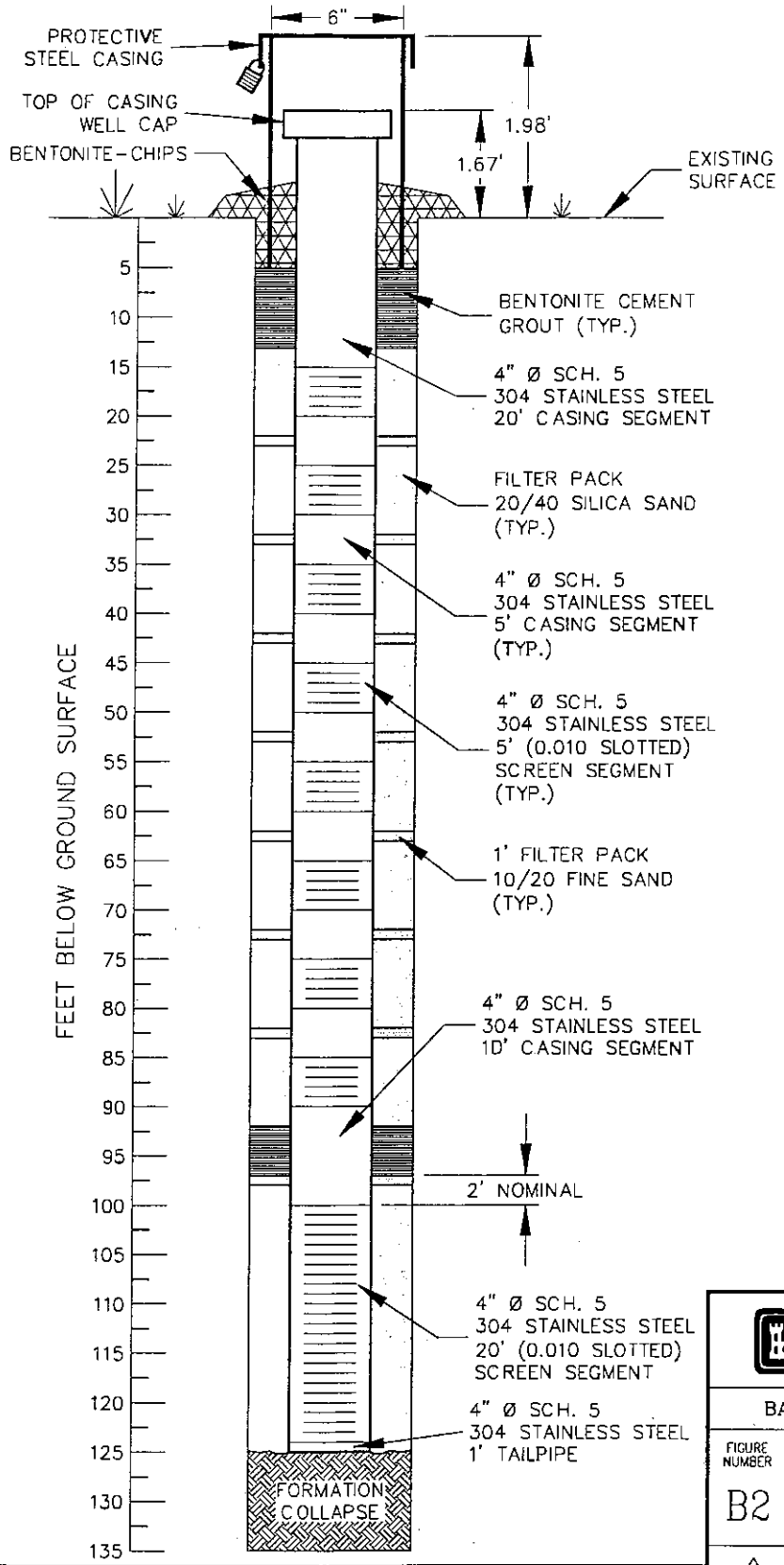


WELL: PBM9902
COMPLETION DATE: 6/9/99

| REVISION | DESCRIPTION | CHKD | APPR | DATE |
|---|---|---|---|---|
| 1 | PER ARMY COMMENTS | PML | PML | 10-13-99 |
| 0 | ORIGINAL ISSUE | PML | PML | 09/08/99 |

| | BY | DATE | | BY | DATE | | BY | DATE | | BY | DATE |
|---|---|---|---|---|---|---|---|---|---|---|---|
| DSGN | ABE | 08/23/99 | DRAWN | JPS | 08/23/99 | CHKD | PML | 09/08/99 | APPR | PML | 09/08/99 |

U.S. ARMY
CORPS OF ENGINEERS
OMAHA DISTRICT

BADGER ARMY AMMUNITION PLANT

FIGURE NUMBER B2

PROPELLENT BURNING GROUND
PBM9902 ACTUAL DESIGN

STONE & WEBSTER ENVIRONMENTAL TECHNOLOGY & SERVICES

| PROJECT NO. | REV. | FILE NAME |
|---|---|---|
| 08786.0530 | 1 | 8786A050 |

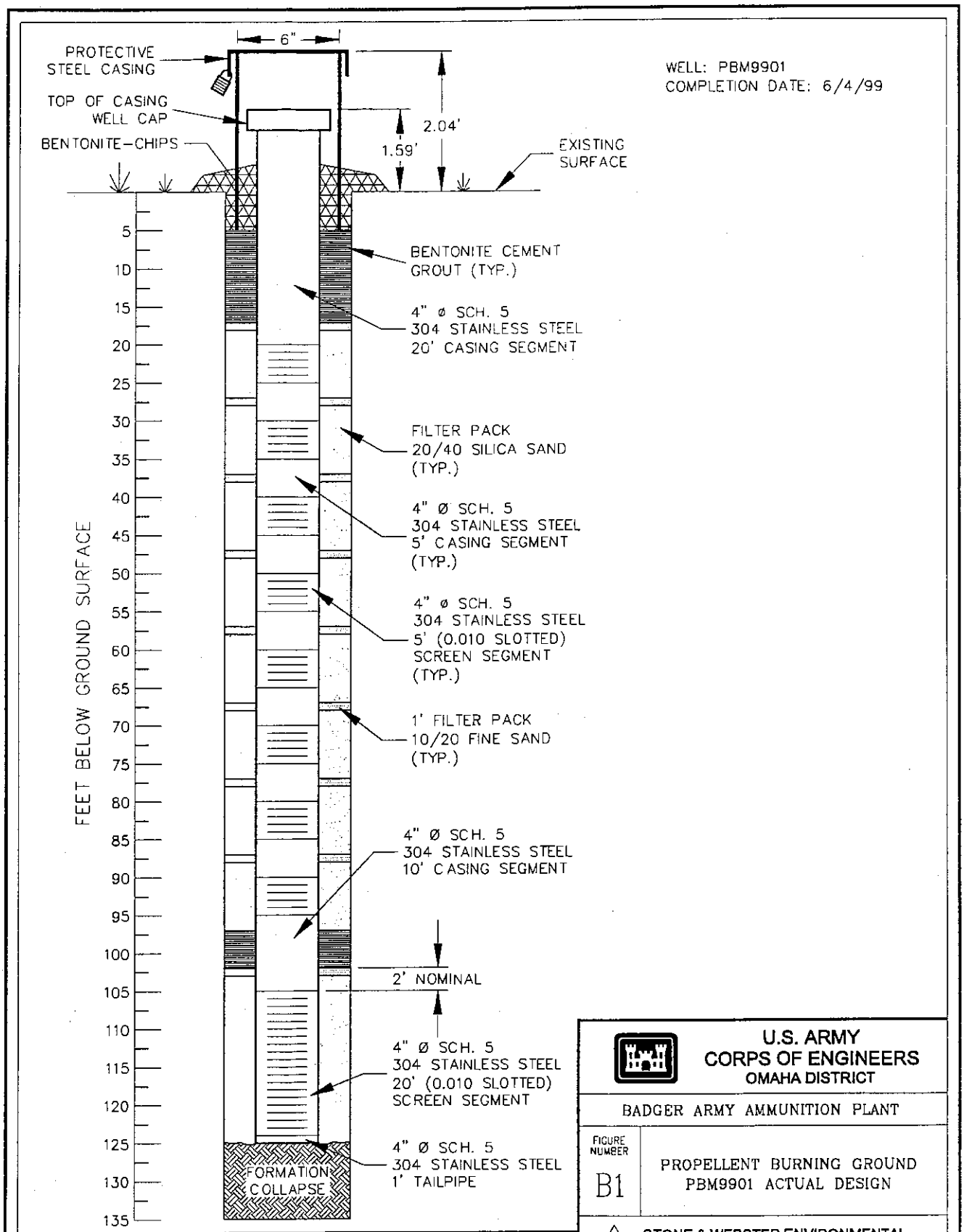


| REVISION | DESCRIPTION | CHKD | APPR | DATE |
|---|---|---|---|---|
| 1 | PER ARMY COMMENTS | | PML | 10-13-99 |
| 0 | ORIGINAL ISSUE | PML | PML | 09/08/99 |

| | BY | DATE | | BY | DATE | | BY | DATE | | BY | DATE |
|---|---|---|---|---|---|---|---|---|---|---|---|
| DSGN | ABE | 08/23/99 | DRAWN | JPS | 08/23/99 | CHKD | PML | 09/08/99 | APPR | PML | 09/08/99 |

U.S. ARMY
CORPS OF ENGINEERS
OMAHA DISTRICT

BADGER ARMY AMMUNITION PLANT

FIGURE NUMBER B1

PROPELLENT BURNING GROUND
PBM9901 ACTUAL DESIGN

STONE & WEBSTER ENVIRONMENTAL TECHNOLOGY & SERVICES

| PROJECT NO. | REV. | FILE NAME |
|---|---|---|
| 08786.0530 | 1 | 8786A060 |

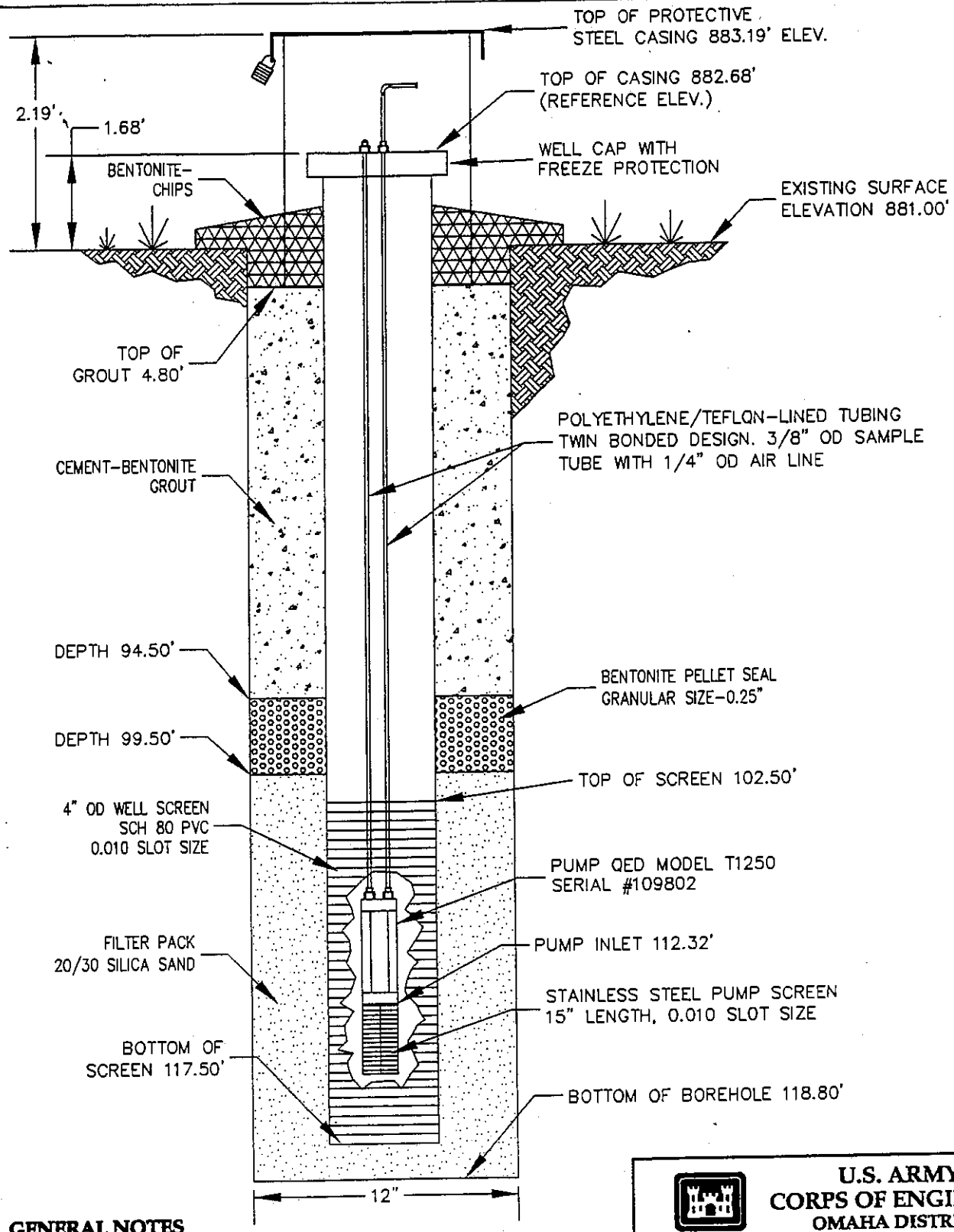


## GENERAL NOTES

DEPTHS ARE BASED ON DISTANCES BELOW SURFACE GRADE
FIELD GEOLOGIST: ANDREW ELLISON
DRILLING COMPANY: ENVIRONMENTAL & FOUNDATION DRILLING INC.
DRILLING METHOD: AIR ROTARY

INSTALLATION:
START-10/12/98
COMPLETE-10/13/98

COORDINATES:
WISCONSIN STATE PLANE NAD27
EASTING-2067001.3
NORTHING-491875.6

| REVISION | DESCRIPTION | CHKD | APPR | DATE |
|---|---|---|---|---|
| 0 | ORIGINAL ISSUE | DMO | DMO | 1/18/99 |

| | BY | DATE | | BY | DATE | | BY | DATE | | BY | DATE |
|---|---|---|---|---|---|---|---|---|---|---|---|
| DSGN | | | DRAWN | | | CHKD | | | APPR | DMO | 1/18/99 |

**U.S. ARMY CORPS OF ENGINEERS**
**OMAHA DISTRICT**

BADGER ARMY AMMUNITION PLANT

FIGURE NUMBER 1

PROPELLENT BURNING GROUND MONITORING WELL PBM-98-01

**STONE & WEBSTER ENVIRONMENTAL TECHNOLOGY & SERVICES**

| PROJECT NO. | REV. | FILE NAME |
|---|---|---|
| 07796.0120 | 0 | 7796A060 |

State of Wisconsin
Department of Natural Resources

Route to: Solid Waste ☐ Haz. Waste ☐ Wastewater ☐
Env. Response & Repair ☐ Underground Tanks ☐ Other ☐ _____

**MONITORING WELL CONSTRUCTION**
Form 4400-113A Rev. 4-90

| | | |
|---|---|---|
| Facility/Project Name<br>BADGER AAP | Local Grid Location of Well<br>_____ ft. ☐ N. ☐ S. _____ ft. ☐ E. ☐ W. | Well Name<br>PBM-0009 |
| Facility License, Permit or Monitoring Number<br>_ _ _ _ _ _ _ _ | Grid Origin Location<br>Lat. ___ ___ ___ Long. ___ ___ ___ or<br>St. Plane _____ ft. N, _____ ft. E. | Wis. Unique Well Number DNR Well Number<br>_____ _____ |
| Type of Well Water Table Observation Well ☒ 11<br>Piezometer ☐ 12 | Section Location of Waste/Source<br>SE 1/4 of NW 1/4 of Sec. 14, T. 10 N, R. 6 ☒ E. ☐ W. | Date Well Installed 0 7 / 2 8 / 0 0<br>m m d d y y |
| Distance Well Is From Waste/Source Boundary<br>ft. | Location of Well Relative to Waste/Source<br>u ☐ Upgradient s ☐ Sidegradient<br>d ☒ Downgradient n ☐ Not Known | Well Installed By: (Person's Name and Firm)<br>ALLIANCE ENVIRONMENTAL, INC.<br>MARTIN, WADE AND JASON |
| Is Well A Point of Enforcement Std. Application?<br>☒ Yes ☐ No | | |

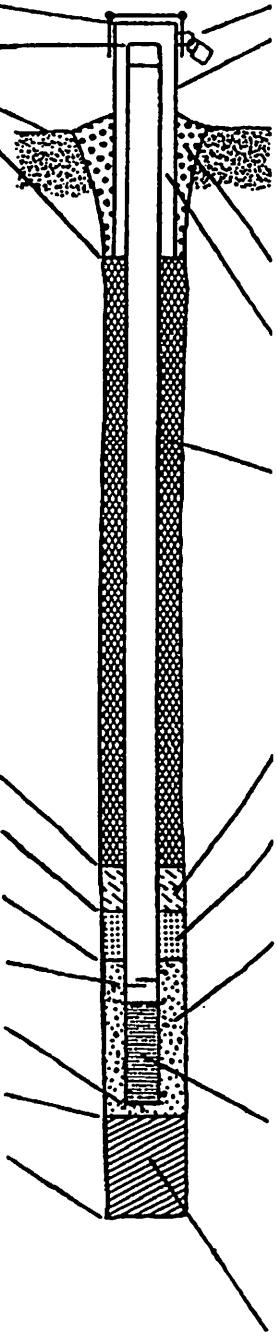

A. Protective pipe, top elevation _____ ft. MSL

B. Well casing, top elevation _____ ft. MSL

C. Land surface elevation _____ ft. MSL

D. Surface seal, bottom _____ ft. MSL or 5.0 ft.

12. USCS classification of soil near screen:
GP ☐ GM ☐ GC ☐ GW ☐ SW ☒ SP ☐
SM ☒ SC ☐ ML ☐ MH ☐ CL ☐ CH ☐
Bedrock ☐

13. Sieve analysis attached? ☐ Yes ☒ No

14. Drilling method used: Rotary ☐ 50
Hollow Stem Auger ☐ 41
ROTOSONIC Other ☒

15. Drilling fluid used: Water ☒ 02 Air ☐ 01
Drilling Mud ☐ 03 None ☐ 99

16. Drilling additives used? ☐ Yes ☒ No

Describe _____

17. Source of water (attach analysis):
HYDRANT

E. Bentonite seal, top _____ ft. MSL or 91.0 ft.

F. Fine sand, top _____ ft. MSL or _____ ft.

G. Filter pack, top _____ ft. MSL or 101.0 ft.

H. Screen joint, top _____ ft. MSL or 105.0 ft.

I. Well bottom _____ ft. MSL or 115.0 ft.

J. Filter pack, bottom _____ ft. MSL or 117.0 ft.

K. Borehole, bottom _____ ft. MSL or 117.0 ft.

L. Borehole, diameter 6.00 in.

M. O.D. well casing 2.37 in.

N. I.D. well casing 2.00 in.

1. Cap and lock? ☒ Yes ☐ No

2. Protective cover pipe:
a. Inside diameter: 4.00 in.
b. Length: 5.0 ft.
c. Material: Steel ☒ 04
Other ☐
d. Additional protection? ☐ Yes ☐ No
If yes, describe: STEEL BUMPER POSTS

3. Surface seal: Bentonite ☒ 30
Concrete ☐ 01
SOIL IN TOP 6" Other ☒

4. Material between well casing and protective pipe:
Bentonite ☐ 30
Annular space seal ☐
NONE Other ☐

5. Annular space seal: a. Granular Bentonite ☐ 33
b. _____ Lbs/gal mud weight..Bentonite-sand slurry ☐ 35
c. _____ Lbs/gal mud weight ..... Bentonite slurry ☐ 31
d. 10 % Bentonite ..... Bentonite-cement grout ☒ 50
e. 14.3 $Ft^3$ volume added for any of the above
f. How installed: Tremie ☐ 01
Tremie pumped ☒ 02
Gravity ☐ 08

6. Bentonite seal: a. Bentonite granules ☐ 33
b. ☐ 1/4 in. ☒ 3/8 in. ☐ 1/2 in. Bentonite pellets ☒ 32
c. _____ Other ☐

7. Fine sand material: Manufacturer, product name & mesh size
a. N/A
b. Volume added 0 $ft^3$

8. Filter pack material: Manufacturer, product name & mesh size
a. REX INTERNATIONAL, SILICA SAND
b. Volume added 2.0 $ft^3$

9. Well casing: Flush threaded PVC schedule 40 ☐ 23
Flush threaded PVC schedule 80 ☒ 24
_____ Other ☐

10. Screen material: SCHEDULE 80 PVC
a. Screen type: Factory cut ☒ 11
Continuous slot ☐ 01
_____ Other ☐
b. Manufacturer ENV. MFG., INC.
c. Slot size: 0.010 in.
d. Slotted length: 9.5 ft.

11. Backfill material (below filter pack): None ☐ 14
SILICA SAND Other ☒

I hereby certify that the information on this form is true and correct to the best of my knowledge.

Signature Dawn Galardi

Firm ARCADIS Geraghty & Miller, Inc.
126 N. Jefferson St., Ste 400, Milwaukee, WI 53202 (414) 276-7742

Please complete both sides of this form and return to the appropriate DNR office listed at the top of this form as required by chs 144,147 & 160, Wis Stats, and ch NR 141, Wis Ad Code. In accordance with ch 144, Wis Stats, failure to file this form may result in a forfeiture of not less than $10, nor more than $5000 for each day of violation. In accordance with ch 147, Wis Stats, failure to file this form may result in a forfeiture of not more than $10,000 for each day of violation. NOTE: Shaded areas are for DNR use only. See instructions for more information including where the completed form should be sent.

RN0099010009

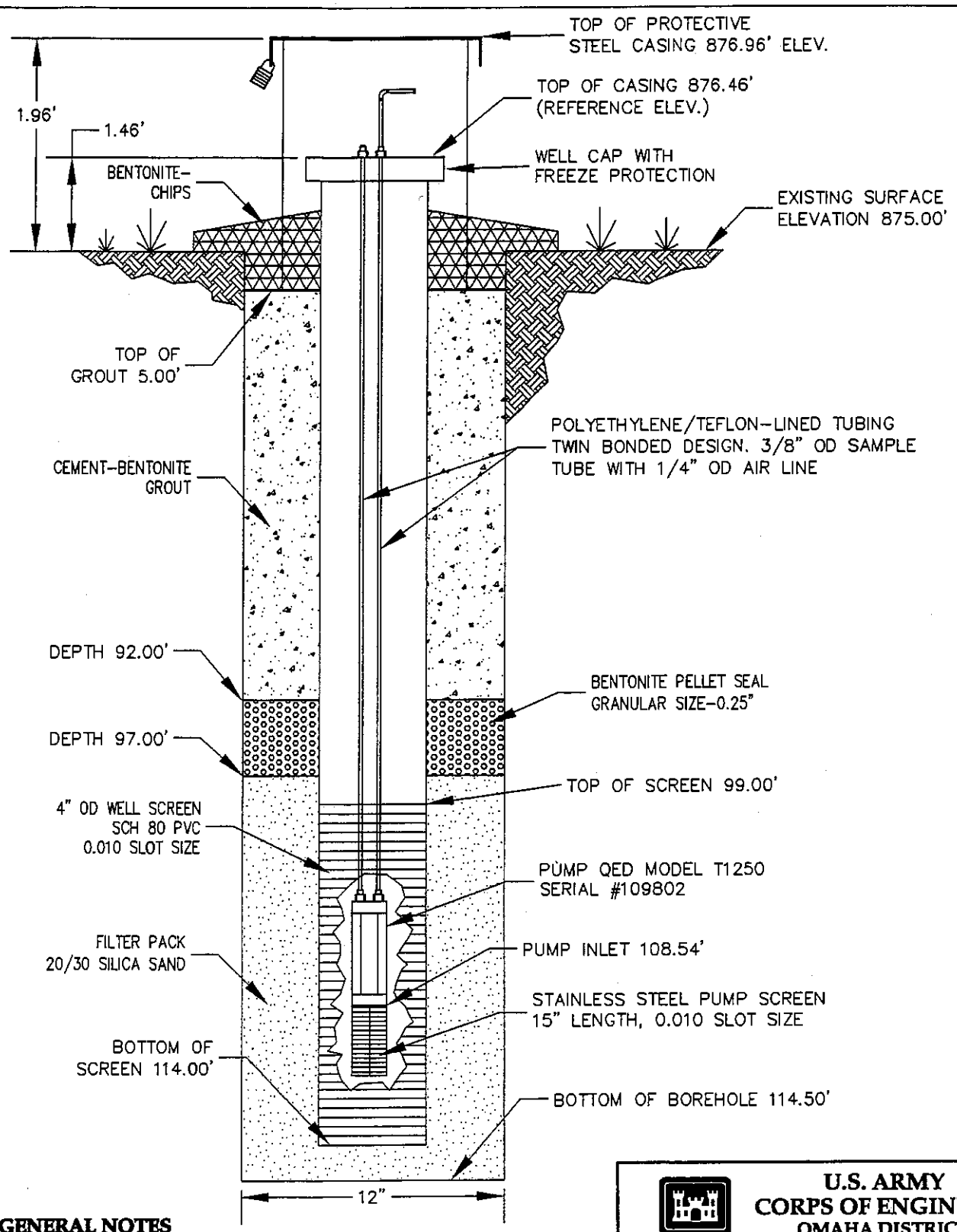


## GENERAL NOTES

DEPTHS ARE BASED ON DISTANCES BELOW SURFACE GRADE
FIELD GEOLOGIST: ANDREW ELLISON
DRILLING COMPANY: ENVIRONMENTAL & FOUNDATION DRILLING INC.
DRILLING METHOD: AIR ROTARY

INSTALLATION:
START-10/06/98
COMPLETE-10/07/98

COORDINATES:
WISCONSIN STATE PLANE NAD27
EASTING-2066887.2
NORTHING-491594.0

| REVISION | DESCRIPTION | CHKD | APPR | DATE |
|---|---|---|---|---|
| 0 | ORIGINAL ISSUE | | PMO | 1/18/99 |

| | BY | DATE | | BY | DATE | | BY | DATE | | BY | DATE |
|---|---|---|---|---|---|---|---|---|---|---|---|
| DSGN | | | DRAWN | | | CHKD | | | APPR | PMO | 1/18/99 |

**U.S. ARMY CORPS OF ENGINEERS**
**OMAHA DISTRICT**

BADGER ARMY AMMUNITION PLANT

FIGURE NUMBER 3

PROPELLENT BURNING GROUND MONITORING WELL PBM-98-03

**STONE & WEBSTER ENVIRONMENTAL TECHNOLOGY & SERVICES**

| PROJECT NO. | REV. | FILE NAME |
|---|---|---|
| 07796.0120 | 0 | 7796A080 |

State of Wisconsin
Department of Natural Resources

# MONITORING WELL DEVELOPMENT

Form 4400-113B Rev. 7-98

Route to: Watershed/Wastewater ☐ Waste Management ☐
Remediation/Redevelopment ☑ Other ☐ _____

| Facility/Project Name | County Name | Well Name |
|---|---|---|
| Badger AAP | Sauk | PBM-1201 |

| Facility License, Permit or Monitoring Number | County Code | Wis. Unique Well Number | DNR Well ID Number |
|---|---|---|---|
| 2814 | 57 | VX883 | 764 |

1. Can this well be purged dry? ☐ Yes ☑ No

2. Well development method
   - surged with bailer and bailed ☐ 41
   - surged with bailer and pumped ☐ 61
   - surged with block and bailed ☐ 42
   - surged with block and pumped ☐ 62
   - surged with block, bailed and pumped ☐ 70
   - compressed air ☐ 20
   - bailed only ☐ 10
   - pumped only ☑ 51
   - pumped slowly ☐ 50
   - Other _____ ☐

3. Time spent developing well 60 min.

4. Depth of well (from top of well casisng) 1211 ft.

5. Inside diameter of well 2.30 in.

6. Volume of water in filter pack and well casing 7.8 gal.

7. Volume of water removed from well 1000 gal.

8. Volume of water added (if any) 0.0 gal.

9. Source of water added None

10. Analysis performed on water added? ☐ Yes ☑ No
(If yes, attach results)

| | Before Development | After Development |
|---|---|---|
| 11. Depth to Water (from top of well casing) | a. 110.10 ft. | 110.10 ft. |
| Date | b. 11/27/2012 (m m / d d / y y y y) | 11/27/2012 (m m / d d / y y y y) |
| Time | c. ___:___ ☐ a.m. ☐ p.m. | ___:___ ☐ a.m. ☐ p.m. |
| 12. Sediment in well bottom | ___.___ inches | ___.___ inches |
| 13. Water clarity | Clear ☐ 10<br>Turbid ☑ 15<br>(Describe) | Clear ☑ 20<br>Turbid ☐ 25<br>(Describe) |
| 14. Total suspended solids | ____.___ mg/l | ____.___ mg/l |
| 15. COD | ____.___ mg/l | ____.___ mg/l |

Fill in if drilling fluids were used and well is at solid waste facility:

16. Well developed by: Name (first, last) and Firm
First Name: Michael Last Name: Hanson
Firm: Layne Christensen Company

17. Additional comments on development:

Name and Address of Facility Contact /Owner/Responsible Party
First Name: Joan Last Name: Kenney
Facility/Firm: Department of the Army
Street: S7560 Hwy 12
City/State/Zip: North Freedom, Wisconsin 53951

I hereby certify that the above information is true and correct to the best of my knowledge.
Signature: Joel Janssen
Print Name: Joel Janssen
Firm: BTS, LLC

NOTE: See instructions for more information including a list of county codes and well type codes.

State of Wisconsin
Department of Natural Resources

# MONITORING WELL DEVELOPMENT

Form 4400-113B Rev. 7-98

Route to: Watershed/Wastewater ☐ Waste Management ☐
Remediation/Redevelopment ☑ Other ☐ _____

| Facility/Project Name | County Name | Well Name |
|---|---|---|
| Badger AAP | Sauk | PBM-1202 |

| Facility License, Permit or Monitoring Number | County Code | Wis. Unique Well Number | DNR Well ID Number |
|---|---|---|---|
| 2814 | 57 | VX885 | 765 |

1. Can this well be purged dry? ☐ Yes ☑ No

2. Well development method
   - surged with bailer and bailed ☐ 41
   - surged with bailer and pumped ☐ 61
   - surged with block and bailed ☐ 42
   - surged with block and pumped ☐ 62
   - surged with block, bailed and pumped ☐ 70
   - compressed air ☐ 20
   - bailed only ☐ 10
   - pumped only ☑ 51
   - pumped slowly ☐ 50
   - Other _____ ☐

3. Time spent developing well 60 min.

4. Depth of well (from top of well casisng) 1210 ft.

5. Inside diameter of well 2.30 in.

6. Volume of water in filter pack and well casing 8.5 gal.

7. Volume of water removed from well 1000 gal.

8. Volume of water added (if any) 0.0 gal.

9. Source of water added None

10. Analysis performed on water added? ☐ Yes ☑ No
(If yes, attach results)

| | Before Development | After Development |
|---|---|---|
| 11. Depth to Water (from top of well casing) | a. 109.10 ft. | 109.10 ft. |
| Date | b. 11/27/2012 (m m / d d / y y y y) | 11/27/2012 (m m / d d / y y y y) |
| Time | c. ___:___ ☐ a.m. ☐ p.m. | ___:___ ☐ a.m. ☐ p.m. |
| 12. Sediment in well bottom | ___.___ inches | ___.___ inches |
| 13. Water clarity | Clear ☐ 10<br>Turbid ☑ 15<br>(Describe) | Clear ☑ 20<br>Turbid ☐ 25<br>(Describe) |
| 14. Total suspended solids | ____.___ mg/l | ____.___ mg/l |
| 15. COD | ____.___ mg/l | ____.___ mg/l |

Fill in if drilling fluids were used and well is at solid waste facility:

16. Well developed by: Name (first, last) and Firm
First Name: Michael Last Name: Hanson
Firm: Layne Christensen Company

17. Additional comments on development:

Name and Address of Facility Contact /Owner/Responsible Party
First Name: Joan Last Name: Kenney
Facility/Firm: Department of the Army
Street: S7560 Hwy 12
City/State/Zip: North Freedom, Wisconsin 53951

I hereby certify that the above information is true and correct to the best of my knowledge.
Signature: Joel Janssen
Print Name: Joel Janssen
Firm: BTS, LLC

NOTE: See instructions for more information including a list of county codes and well type codes.

State of Wisconsin
Department of Natural Resources

# MONITORING WELL DEVELOPMENT

Form 4400-113B Rev. 7-98

Route to: Watershed/Wastewater ☐ Waste Management ☐
Remediation/Redevelopment ☑ Other ☐ _____

| Facility/Project Name | County Name | Well Name |
|---|---|---|
| Badger AAP | Sauk | PBM-1203 |

| Facility License, Permit or Monitoring Number | County Code | Wis. Unique Well Number | DNR Well ID Number |
|---|---|---|---|
| 2814 | 57 | VX884 | 766 |

1. Can this well be purged dry? ☐ Yes ☑ No

2. Well development method
   - surged with bailer and bailed ☐ 41
   - surged with bailer and pumped ☐ 61
   - surged with block and bailed ☐ 42
   - surged with block and pumped ☐ 62
   - surged with block, bailed and pumped ☐ 70
   - compressed air ☐ 20
   - bailed only ☐ 10
   - pumped only ☑ 51
   - pumped slowly ☐ 50
   - Other _____ ☐

3. Time spent developing well 60 min.

4. Depth of well (from top of well casisng) 1218 ft.

5. Inside diameter of well 2.30 in.

6. Volume of water in filter pack and well casing 85 gal.

7. Volume of water removed from well 1000 gal.

8. Volume of water added (if any) 0.0 gal.

9. Source of water added None

10. Analysis performed on water added? ☐ Yes ☑ No
(If yes, attach results)

| | Before Development | After Development |
|---|---|---|
| 11. Depth to Water (from top of well casing) | a. 107.80 ft. | 109.90 ft. |
| Date | b. 11/27/2012 (m m / d d / y y y y) | 11/27/2012 (m m / d d / y y y y) |
| Time | c. ___:___ ☐ a.m. ☐ p.m. | ___:___ ☐ a.m. ☐ p.m. |
| 12. Sediment in well bottom | ___.___ inches | ___.___ inches |
| 13. Water clarity | Clear ☐ 10<br>Turbid ☑ 15<br>(Describe) | Clear ☑ 20<br>Turbid ☐ 25<br>(Describe) |
| 14. Total suspended solids | ____.___ mg/l | ____.___ mg/l |
| 15. COD | ____.___ mg/l | ____.___ mg/l |

Fill in if drilling fluids were used and well is at solid waste facility:

16. Well developed by: Name (first, last) and Firm
First Name: Michael Last Name: Hanson
Firm: Layne Christensen Company

17. Additional comments on development:

Name and Address of Facility Contact /Owner/Responsible Party
First Name: Joan Last Name: Kenney
Facility/Firm: Department of the Army
Street: S7560 Hwy 12
City/State/Zip: North Freedom, Wisconsin 53951

I hereby certify that the above information is true and correct to the best of my knowledge.
Signature: Joel Janssen
Print Name: Joel Janssen
Firm: BTS, LLC

NOTE: See instructions for more information including a list of county codes and well type codes.

State of Wisconsin
Department of Natural Resources

# MONITORING WELL DEVELOPMENT
Form 4400-113B 8-89

Facility/Project Name: BADGER ARMY AMUNITION PLANT

Well Name: LOM-89-01

License, Permit or Monitoring Number: _____

Wis. Unique Well Number: _____

DNR Well Number: _____

1. Can this well be purged dry? ☐ Yes ☒ No

2. Well development method

| | | |
|---|---|---|
| surged with bailer and bailed | ☐ | 4 1 |
| surged with bailer and pumped | ☐ | 6 1 |
| surged with block and bailed | ☐ | 4 2 |
| surged with block and pumped | ☐ | 6 2 |
| surged with block, bailed and pumped | ☐ | 7 0 |
| compressed air | ☐ | 2 0 |
| bailed only | ☐ | 1 0 |
| pumped only | ☒ | 5 1 |
| pumped slowly | ☐ | 5 0 |
| Other _____ | ☐ | ____ |

3. Time spent developing well: 60 min.

4. Depth of well (from top of well casisng): 156. ft.

5. Inside diameter of well: 4.0 in.

6. Volume of water in filter pack and well casing: 34. gal.

7. Volume of water removed from well: 170. gal.

8. Volume of water added (if any): 0. gal.

9. Source of water added _____

10. Analysis performed on water added? ☐ Yes ☒ No
(If yes, attach results)

| | Before Development | After Development |
|---|---|---|
| 11. Depth to Water (from top of well casing) | 142.71 ft. | 142.87 ft. |
| Date | 03/05/89 (m m d d y y) | 03/06/89 (m m d d y y) |
| Time | 11:30 ☒ a.m. ☐ p.m. | 11:00 ☐ a.m. ☐ p.m. |
| 12. Sediment in well bottom | ___.__ inches | ___.__ inches |
| 13. Water clarity | Clear ☒ 10<br>Turbid ☐ 15<br>(Describe) | Clear ☐ 20<br>Turbid ☐ 25<br>(Describe) |

Fill in if drilling fluids were used and well is at solid waste facility:

| | | |
|---|---|---|
| 14. Total suspended solids | ____.__ mg/l | ____.__ mg/l |
| 15. COD | ____.__ mg/l | ____.__ mg/l |

Additional comments on development:

Well developed by: Person's Name and Firm

Name: R. DAVID DINSMORE

Firm: C E ENVIRONMENTAL

I hereby certify that the above information is true and correct to the best of my knowledge.

Signature: William Dyl

Firm: C E ENVIRONMENTAL

NOTE: Shaded areas are for DNR use only. See instructions for more information.

State of Wisconsin
Department of Natural Resources

# MONITORING WELL DEVELOPMENT
Form 4400-113B 8-89

| Facility/Project Name | Well Name |
|---|---|
| BADGER ARMY AMUNITION PLANT | LON-89-02A |
| License, Permit or Monitoring Number ___ | Wis. Unique Well Number ___ / DNR Well Number ___ |

1. Can this well be purged dry? ☐ Yes ☒ No

2. Well development method

| | | |
|---|---|---|
| surged with bailer and bailed | ☐ | 4 1 |
| surged with bailer and pumped | ☐ | 6 1 |
| surged with block and bailed | ☐ | 4 2 |
| surged with block and pumped | ☐ | 6 2 |
| surged with block, bailed and pumped | ☐ | 7 0 |
| compressed air | ☐ | 2 0 |
| bailed only | ☐ | 1 0 |
| pumped only | ☒ | 5 1 |
| pumped slowly | ☐ | 5 0 |
| Other _____ | ☐ | ___ |

3. Time spent developing well 105 min.

4. Depth of well (from top of casisng) 156. ft.

5. Inside diameter of well 4.0 in.

6. Volume of water in filter pack and well casing 32. gal.

7. Volume of water removed from well 160. gal.

8. Volume of water added (if any) 6. gal.

9. Source of water added _____

10. Analysis performed on water added? ☐ Yes ☒ No
(If yes, attach results)

| | Before Development | After Development |
|---|---|---|
| 11. Depth to Water (from top of well casing) | 145.67 ft. | 146.20 ft. |
| Date | 03/06/89 (m m d d y y) | 03/07/89 (m m d d y y) |
| Time | 8:45 ☒ a.m. ☐ p.m. | 12:00 ☐ a.m. ☐ p.m. |
| 12. Sediment in well bottom | ___.___ inches | ___.___ inches |
| 13. Water clarity | Clear ☒ 10<br>Turbid ☐ 15<br>(Describe) | Clear ☐ 20<br>Turbid ☐ 25<br>(Describe) |

Fill in if drilling fluids were used and well is at solid waste facility:

| | | |
|---|---|---|
| 14. Total suspended solids | ____.___ mg/l | ____.___ mg/l |
| 15. COD | ____.___ mg/l | ____.___ mg/l |

Additional comments on development:

Well developed by: Person's Name and Firm

Name: R. DAVID DINSMORE

Firm: C E ENVIRONMENTAL

I hereby certify that the above information is true and correct to the best of my knowledge.

Signature: [signature]

Firm: C E ENVIRONMENTAL

NOTE: Shaded areas are for DNR use only. See instructions for more information.

State of Wisconsin
Department of Natural Resources

# MONITORING WELL DEVELOPMENT
Form 4400-113B 8-89

| Facility/Project Name | Well Name |
|---|---|
| BADGER ARMY AMUNITION PLANT | LON - 89 - 03A |
| License, Permit or Monitoring Number _____ | Wis. Unique Well Number _____ / DNR Well Number ____ |

1. Can this well be purged dry? ☐ Yes ☒ No

2. Well development method

| | | |
|---|---|---|
| surged with bailer and bailed | ☐ | 4 1 |
| surged with bailer and pumped | ☐ | 6 1 |
| surged with block and bailed | ☐ | 4 2 |
| surged with block and pumped | ☐ | 6 2 |
| surged with block, bailed and pumped | ☐ | 7 0 |
| compressed air | ☐ | 2 0 |
| bailed only | ☐ | 1 0 |
| pumped only | ☒ | 5 1 |
| pumped slowly | ☐ | 5 0 |
| Other _____ | ☐ | ____ |

3. Time spent developing well __60 min.

4. Depth of well (from top of well casisng) 160.__ ft.

5. Inside diameter of well __40__ in.

6. Volume of water in filter pack and well casing __31.__ gal.

7. Volume of water removed from well 155.__ gal.

8. Volume of water added (if any) __0.__ gal.

9. Source of water added _____

10. Analysis performed on water added? ☐ Yes ☒ No
(If yes, attach results)

| | Before Development | After Development |
|---|---|---|
| 11. Depth to Water (from top of well casing) | 147.49 ft. | 147.53 ft. |
| Date | 03/05/89 (m m d d y y) | 03/06/89 (m m d d y y) |
| Time | 15:00 ☐ a.m. ☒ p.m. | 16:00 ☐ a.m. ☒ p.m. |
| 12. Sediment in well bottom | ___.__ inches | ___.__ inches |
| 13. Water clarity | Clear ☐ 10<br>Turbid ☒ 15<br>(Describe)<br>LOW MARKED WATER CLOUDY AND COLORED BROWN | Clear ☐ 20<br>Turbid ☐ 25<br>(Describe) |

Fill in if drilling fluids were used and well is at solid waste facility:

| | | |
|---|---|---|
| 14. Total suspended solids | ____.__ mg/l | ____.__ mg/l |
| 15. COD | ____.__ mg/l | ____.__ mg/l |

Additional comments on development:

| Well developed by: Person's Name and Firm | I hereby certify that the above information is true and correct to the best of my knowledge. |
|---|---|
| Name: R. DAVID DINSMORE | Signature: [signature] |
| Firm: C E ENVIRONMENTAL | Firm: C E ENVIRONMENTAL |

NOTE: Shaded areas are for DNR use only. See instructions for more information.

State of Wisconsin
Department of Natural Resources

# MONITORING WELL DEVELOPMENT
Form 4400-113B 8-89

| Facility/Project Name | Well Name |
|---|---|
| BADGER ARMY AMMUNITION PLANT | LON-89-03B |
| License, Permit or Monitoring Number ____ | Wis. Unique Well Number ____ / DNR Well Number ____ |

1. Can this well be purged dry? ☐ Yes ☒ No

2. Well development method
   - surged with bailer and bailed ☐ 4 1
   - surged with bailer and pumped ☐ 6 1
   - surged with block and bailed ☐ 4 2
   - surged with block and pumped ☐ 6 2
   - surged with block, bailed and pumped ☐ 7 0
   - compressed air ☐ 2 0
   - bailed only ☐ 1 0
   - pumped only ☒ 5 1
   - pumped slowly ☐ 5 0
   - Other _____ ☐ ____

3. Time spent developing well __75 min.

4. Depth of well (from top of well casisng) 199.__ ft.

5. Inside diameter of well __4.0__ in.

6. Volume of water in filter pack and well casing __56.__ gal.

7. Volume of water removed from well 280.__ gal.

8. Volume of water added (if any) __6.__ gal.

9. Source of water added _____

10. Analysis performed on water added? ☐ Yes ☒ No
(If yes, attach results)

| | Before Development | After Development |
|---|---|---|
| 11. Depth to Water (from top of well casing) | 147.14 ft. | 147.18 ft. |
| Date | 03/05/89 (mm dd yy) | 03/06/89 (mm dd yy) |
| Time | 12:45 ☐ a.m. ☒ p.m. | 13:00 ☐ a.m. ☒ p.m. |
| 12. Sediment in well bottom | ___.__ inches | ___.__ inches |
| 13. Water clarity | Clear ☒ 10<br>Turbid ☐ 15<br>(Describe) | Clear ☐ 20<br>Turbid ☐ 25<br>(Describe) |

Fill in if drilling fluids were used and well is at solid waste facility:

| | | |
|---|---|---|
| 14. Total suspended solids | ____.__ mg/l | ____.__ mg/l |
| 15. COD | ____.__ mg/l | ____.__ mg/l |

Additional comments on development:

| Well developed by: Person's Name and Firm | I hereby certify that the above information is true and correct to the best of my knowledge. |
|---|---|
| Name: R. DAVID DINSMORE | Signature: [signature] |
| Firm: C E ENVIRONMENTAL | Firm: C E ENVIRONMENTAL |

NOTE: Shaded areas are for DNR use only. See instructions for more information.

State of Wisconsin
Department of Natural Resources

# MONITORING WELL DEVELOPMENT
Form 4400-113B 8-89

| Facility/Project Name | Well Name |
|---|---|
| BADGER ARMY AMMUNITION PLANT | PBM-89-09 |
| License, Permit or Monitoring Number | Wis. Unique Well Number / DNR Well Number |

1. Can this well be purged dry? ☐ Yes ☒ No

2. Well development method

| | | |
|---|---|---|
| surged with bailer and bailed | ☐ | 4 1 |
| surged with bailer and pumped | ☐ | 6 1 |
| surged with block and bailed | ☐ | 4 2 |
| surged with block and pumped | ☐ | 6 2 |
| surged with block, bailed and pumped | ☐ | 7 0 |
| compressed air | ☐ | 2 0 |
| bailed only | ☐ | 1 0 |
| pumped only | ☒ | 5 1 |
| pumped slowly | ☐ | 5 0 |
| Other _____ | ☐ | |

3. Time spent developing well 105 min.

4. Depth of well (from top of well casisng) 125.__ ft.

5. Inside diameter of well 4.0 in.

6. Volume of water in filter pack and well casing 33 AND 1 8.__ gal.

7. Volume of water removed from well 415.__ gal.

8. Volume of water added (if any) 50.__ gal.

9. Source of water added _____

10. Analysis performed on water added? ☐ Yes ☒ No
(If yes, attach results)

| | Before Development | After Development |
|---|---|---|
| 11. Depth to Water (from top of well casing) | 107.20 ft. | 107.59 ft. |
| Date | 03/18/89 (m m d d y y) | 03/19/89 (m m d d y y) |
| Time | 15:00 ☐ a.m. ☒ p.m. | 15:00 ☐ a.m. ☒ p.m. |
| 12. Sediment in well bottom | ___.__ inches | ___.__ inches |
| 13. Water clarity | Clear ☐ 10<br>Turbid ☒ 15<br>(Describe)<br>CLOUDY FOR FIRST VOLUME THEN CLEAR | Clear ☐ 20<br>Turbid ☐ 25<br>(Describe) |

Fill in if drilling fluids were used and well is at solid waste facility:

| | | |
|---|---|---|
| 14. Total suspended solids | _____.__ mg/l | _____.__ mg/l |
| 15. COD | _____.__ mg/l | _____.__ mg/l |

Additional comments on development:

Well developed by: Person's Name and Firm

Name: R. DAVID DINSMORE

Firm: C E ENVIRONMENTAL

I hereby certify that the above information is true and correct to the best of my knowledge.

Signature: [signature]

Firm: C E ENVIRONMENTAL

NOTE: Shaded areas are for DNR use only. See instructions for more information.

# Information Not Relevant To Case Closure Request

## F. Notification to Owners of Impacted Properties

The source of the groundwater contamination in Parcel H is the Propellant Burning Ground (PBG) area. Closure of the PBG groundwater plume is not part of the Parcel H closure request.

## PARCEL "F"

Part of the NW 1/4 of Section 23, T10N-R6E, Town of Sumpter, Sauk County, Wisconsin described as follows:
Commencing at the East 1/4 corner of said Section 23, thence N00°58'24"W 170.72 feet to the centerline of an existing drive; thence, along said centerline, S89°28'32"W 3258.71 feet to the point of beginning;
thence N58°46'54"W 1980.50 feet to the centerline of said drive;
thence, along said centerline, S00°16'51"W 892.58 feet;
thence, continuing along said centerline, on the arc of a 156.47 foot radius curve, concave to the northeast, the chord of which bears S45°07'19"E 209.91;
thence, continuing along said centerline, N89°28'32"E 1549.42 feet to the point of beginning.
Subject to easements, covenants and restrictions of record.

## PARCEL "G"

Part of Section 10 and Section 11, T10N-R6E, Town of Sumpter; Sauk County, Wisconsin described as follows:
Beginning at the southeast corner of said Section 10;
thence, along the south line thereof, N 89°39'22" W 74.13 feet;
thence N00°07'38"E 1260.65 feet;
thence S88°58'45"E 782.39 feet;
thence S71°10'24"E 492.85 feet;
thence S89°09'30"E 397.56 feet;
thence S00°32'06"W 1096.93 feet to the south line of said Section 11;
thence N89°27'54"W 1564.76 feet to the point of beginning.
Subject to easements, covenants and restrictions of record.

***Note: Parcel "G", Parcel "H", Parcel "I" and Parcel "J" are all within Parcel "D". These are areas which will remain under the Army's institutional control.***

## PARCEL "H"

Part of Section 11 and Section 14, T10N-R6E, Town of Sumpter; Sauk County, Wisconsin described as follows:
Commencing at the southeast corner of said Section 11, thence, along the south line thereof, N 89°28'42" W 1213.37 feet to the point of beginning;
~~thence, along said north line, N89°28'42"W 848.49 feet;~~
~~thence S18°23'26"W 96.58 feet;~~
thence S03°56'20"E 339.57 feet;
thence S89°00'36"E 692.34 feet;
thence S02°22'23"E 564.88 feet;
thence N89°23'39"W 609.78 feet;
thence S01°50'42"E 322.16 feet;
thence S89°56'31"W 578.83 feet;
thence S11°25'37"W 138.32 feet;
thence S00°06'31"E 724.41 feet;
thence S89°27'25"W 713.50 feet;
thence N00°39'46"W 818.11 feet;
thence N86°51'40"E 357.23 feet;
thence N00°17'22"E 862.32 feet;
thence S89°52'44"E 355.45 feet;
~~thence N02°45'38"E 405.28 feet;~~
~~thence S89°43'53"W 229.43 feet;~~
~~thence N09°02'14"E 1050.20 feet;~~
~~thence S79°29'54"E 1433.47 feet;~~
~~thence S01°08'28"W 697.01 feet to the point of beginning~~.
Subject to easements, covenants and restrictions of record.

This Parcel H description also contains Parcel H1
Only Parcel H corners are shown.

Parcel H (and H1) were previously transferred to the USDA and no revised legal description was conducted by the Army.

# DAIRY FORAGE RESEARCH CENTER ACQUISITION OF BADGER ARMY AMMUNITION PLANT LANDS

BEING PARTS OF SECTINS 3, 10, 11, 13, 14, 23 & 24, TOWN OF SUMPTER, T10N-R6E
AND OF SECTIONS 7, 18 & 19, T10N-R7E, TOWN OF MERRIMAC
SAUK COUNTY, WISCONSIN

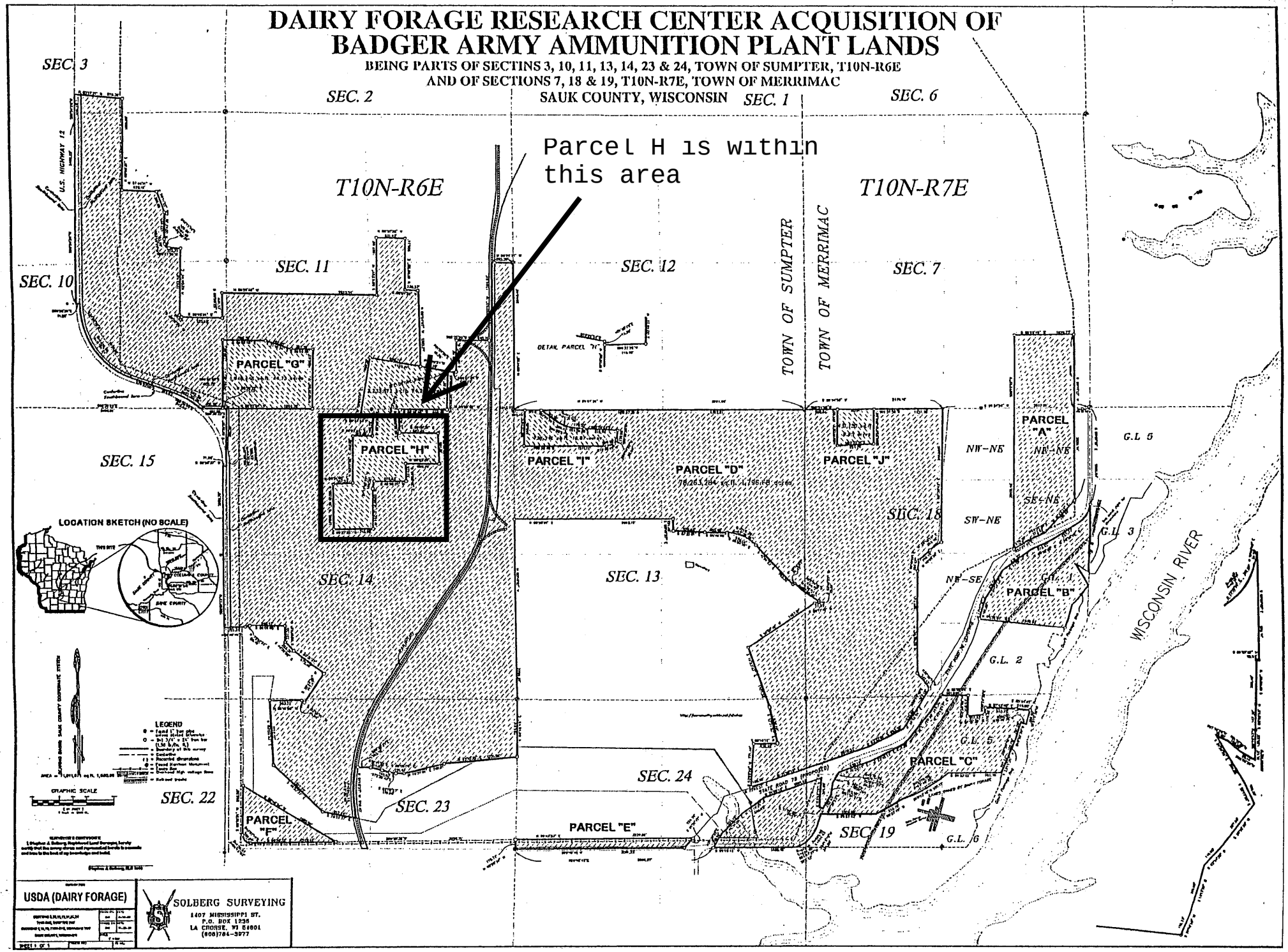

# Verification of Zoning

**G.3.** The Badger Army Ammunitions Plant land was acquired by the United States for use as an ammunition plant, so under ss. 1.02(intro.) and (1), Wis. States., it is a "site for the erection of …magazines, arsenals,…" over which the United States has exclusive jurisdiction as a "federal enclave." Once Wisconsin cedes exclusive jurisdiction to the United States over a place or tract of land within the state pursuant to ss. 1.02(1) and 1.03, States., the United States retains exclusive jurisdiction" so long… as the place or tract shall remain the property of the United States." To date, Parcel H remains United States property subject to the exclusive jurisdiction of the United States.

**DEPARTMENT OF THE ARMY**
**BADGER ARMY AMMUNITION PLANT**
**S7560 U.S. HIGHWAY 12**
**NORTH FREEDOM, WISCONSIN 53951-9588**

July 31, 2014

SUBJECT: Parcel H – Legal Description Certification

Mr. Will Myers
Hydrogeologist
Wisconsin Department of Natural Resources
South Central Region
3911 Fish Hatchery Road
Fitchburg, WI 53711-5397

Dear Mr. Myers:

As a representative for the Responsible Party, I believe that the legal description, as provided in the Case Closure – GIS Registry (Form 4400-202) accurately describes the correct property for Parcels H. Parcel H is the southern portion of the former Parcel H.

Please do not hesitate to contact me at 608-643-3361 if you have any questions.

Sincerely,

Joan M. Kenney

Joan M. Kenney
Commander's Representative

Copy furn: Badger Technical Services, LLC