GIS REGISTRY INFORMATION

SITE NAME: Oscar Mayer - ASTs

BRRTS #: 03-13-000053 | **FID # (if appropriate):**

COMMERCE # (if appropriate):

CLOSURE DATE: 01/23/2008

STREET ADDRESS: 2007 Roth St. & 1900 Commercial Ave.

CITY: Portage

SOURCE PROPERTY GPS COORDINATES (meters in WTM91 projection): X= 572153 Y= 293125

CONTAMINATED MEDIA: Groundwater [ ] Soil [ ] Both [X]

OFF-SOURCE GW CONTAMINATION >ES: [X] Yes [ ] No

IF YES, STREET ADDRESS 1: 2007 Roth Street

GPS COORDINATES (meters in WTM91 projection): X= 572096 Y= 293142

OFF-SOURCE SOIL CONTAMINATION >Generic or Site-Specific RCL (SSRCL): [X=] Yes [ ] No

IF YES, STREET ADDRESS 1:

GPS COORDINATES (meters in WTM91 projection): X= 572180 Y= 293132

CONTAMINATION IN RIGHT OF WAY: [X] Yes [ ] No

DOCUMENTS NEEDED:

Closure Letter, and any conditional closure letter or denial letter issued	X
Copy of most recent deed, including legal description, for all affected properties	X
Certified survey map or relevant portion of the recorded plat map (*if referenced in the legal description*) for all affected properties	X
County Parcel ID number, *if used for county*, for all affected properties	X
Location Map which outlines all properties within contaminated site boundaries on USGS topographic map or plat map in sufficient detail to permit the parcels to be located easily (8.5x14" if paper copy). If groundwater standards are exceeded, the map must also include the location of all municipal and potable wells within 1200' of the site.	X
Detailed Site Map(s) for all affected properties, showing buildings, roads, property boundaries, contaminant sources, utility lines, monitoring wells and potable wells. (8.5x14", if paper copy) This map shall also show the location of all contaminated public streets, highway and railroad rights-of-way in relation to the source property and in relation to the boundaries of groundwater contamination exceeding ch. NR 140 ESs and soil contamination exceeding ch. NR 720 generic or SSRCLs.	X
Tables of Latest Groundwater Analytical Results (no shading or cross-hatching)	X
Tables of Latest Soil Analytical Results (no shading or cross-hatching)	X
Isoconcentration map(s), *if required for site investigation (SI)* (8.5x14" if paper copy**).** The isoconcentration map should have flow direction and extent of groundwater contamination defined. **If not available, include the latest extent of contaminant plume map.**	X
GW: Table of water level elevations, with sampling dates, and free product noted if present	X
GW: Latest groundwater flow direction/monitoring well location map (should be 2 maps if maximum variation in flow direction is greater than 20 degrees)	X
SOIL: Latest horizontal extent of contamination exceeding generic or SSRCLs, with one contour	X
Geologic cross-sections, *if required for SI.* (8.5x14' if paper copy)	X
RP certified statement that legal descriptions are complete and accurate	X
Copies of off-source notification letters (if applicable)	X
Letter informing ROW owner of residual contamination (if applicable)(public, highway or railroad ROW)	X
Copy of (soil or land use) deed restriction(s) or deed notice *if any required as a condition of closure*	
Copy of any maintenance plan referenced in the deed restriction.	

State of Wisconsin \ DEPARTMENT OF NATURAL RESOURCES

Jim Doyle, Governor
Matthew J. Frank, Secretary
Lloyd L. Eagan, Regional Director

South Central Region Headquarters
3911 Fish Hatchery Road
Fitchburg, Wisconsin 53711-5397
Telephone 608-275-3266
FAX 608-275-3338
TTY Access via relay - 711

January 23, 2008

File Ref: 03-13-00053

Mr. Robert Sherman
Kraft Global - Oscar Mayer Foods
910 Mayer Avenue
Madison, WI 53704-4287

Subject: Closure, Oscar Mayer - Hartmeyer Aboveground Storage Tank (AST), 2007 Roth Street & 1900 Commercial Street, Madison, WI

Dear Mr. Sherman:

On September 24, 2007, the South Central Region Closure Committee reviewed your request for closure of the case described above. The South Central Region Closure Committee reviews environmental remediation cases for compliance with state rules and statutes to maintain consistency in the closure of these cases. On October 4, 2007, you were notified that the Closure Committee had granted conditional closure to this case.

On December 3, 2007, the Department received correspondence indicating that you have complied with the requirements of closure. The groundwater monitoring wells (24) have been properly abandoned and the soil cuttings (8 drums) have been properly disposed of.

Based on the correspondence and data provided, it appears that your case meets the requirements of ch. NR 726, Wisconsin Administrative Code. The Department considers this case closed and no further investigation or remediation is required at this time.

Please be aware that this case may be reopened pursuant to s. NR 726.09, Wisconsin Administrative Code, if additional information regarding site conditions indicates that contamination on or from the site poses a threat to public health, safety or welfare, or the environment.

GIS Registry

The conditions of case closure set out below in this letter require that your site be listed on the Remediation and Redevelopment Program's GIS Registry. The specific reasons are summarized below:

- Residual soil contamination exists that must be properly managed should it be excavated or removed.
- Groundwater contamination is present above Chapter NR 140 enforcement standards.

Information that was submitted with your closure request application will be included on the GIS Registry. To review the sites on the GIS Registry web page, visit the RR Sites Map page at: http://dnr.wi.gov/org/aw/rr/gis/index.htm. If your property is listed on the GIS Registry because of remaining contamination and you intend to construct or reconstruct a well, you will need prior Department approval in accordance with s. NR 812.09(4)(w), Wis. Adm. Code. To obtain approval, Form 3300-254 needs to be completed and submitted to the DNR Drinking and Groundwater program's regional water supply specialist. This form can be obtained on-line http://dnr.wi.gov/org/water/dwg/3300254.pdf or at the web address listed above for the GIS Registry.

Remaining Residual Groundwater Contamination

Groundwater impacted by petroleum contamination greater than enforcement standards set forth in ch. NR140, Wis. Adm. Code, is present both on the contaminated property and off the contaminated property. Off-property owners have been notified of the presence of groundwater contamination. For more detailed information regarding the locations where groundwater samples have been collected (i.e., monitoring well locations) and the associated contaminant concentrations, refer to the Remediation and Redevelopment Program's GIS Registry at http://dnr.wi.gov/org/aw/rr/gis/index.htm.

The Department appreciates your efforts to restore the environment at this site. If you have any questions regarding this closure decision or anything outlined in this letter, please contact me at telephone number shown below.

Sincerely,

Dino Tsoris, P.G.
Hydrogeologist
Remediation & Redevelopment Program
South Central Region
Wisconsin Department of Natural Resources
Telephone: (608) 275-3299

cc: Mr. John Tweddale, BT2, Inc., 2830 Dairy Drive, Madison, WI53718-6751
Ms. Andrea H. Johns, P.O. 833374, Richardson, TX 75083
John Hartmeyer Estate, C/O John Pike and J.R. Pike Corporation, 433 Woodward Drive, Madison, WI 53704-1529
Mr. Timm P. Speerschneider, DeWitt Ross & Stevens, Two East Mifflin Street, Suite 600, Madison, WI 53703-2865
Mr. William M. Tuttle, Canadian Pacific Railway, 501 Marquette Avenue S., Minneapolis, MN 55402

State of Wisconsin \ DEPARTMENT OF NATURAL RESOURCES

Jim Doyle, Governor
Matthew J. Frank, Secretary
Lloyd L. Eagan, Regional Director

South Central Region Headquarters
3911 Fish Hatchery Road
Fitchburg, Wisconsin 53711-5397
Telephone 608-275-3266
FAX 608-275-3338
TTY Access via relay - 711

October 4, 2007

File Ref: 03-13-000053

Mr. Robert Sherman
Kraft Global Oscar Mayer Foods, Inc.
910 Mayer Avenue
Madison, WI 54704-4287

Subject: Conditional Closure Decision with Requirements to Achieve Final Closure, Oscar Mayer - Hartmeyer Aboveground Storage Tank Area, 2007 Roth Street & 1900 Commercial Street, Madison, WI

Dear Mr. Sherman:

On September 24, 2007, the South Central Region Closure Committee reviewed your request for closure of the case described above. The South Central Region Closure Committee reviews environmental remediation cases for compliance with state rules and statutes to maintain consistency in the closure of these cases. After careful review of the closure request, the Closure Committee has determined that the residual fuel oil petroleum contamination originating from the distribution lines associated with the aboveground storage tank area located on the Hartmeyer property appears to have been investigated and remediated to the extent practicable under site conditions. Your case has been remediated to Department standards in accordance with s. NR 726.05, Wis. Adm. Code and will be closed if the following conditions are satisfied:

MONITORING WELL ABANDONMENT

The monitoring wells and temporary wells at the site must be properly abandoned in compliance with ch. NR 141, Wis. Adm. Code. Documentation of well abandonment must be submitted to Dino Tsoris on Form 3300-5B found at www.dnr.state.wi.us/org/water/dwg/gw/ or provided by the Department of Natural Resources.

PURGE WATER, WASTE AND SOIL PILE REMOVAL

Any remaining purge water, waste and/or soil piles generated as part of site investigation or remediation activities must be removed from the site and disposed of or treated in accordance with Department of Natural Resources' rules. Once that work is completed, please send appropriate documentation regarding the treatment or disposal of the remaining purge water, waste and/or soil piles.

RIGHT-OF-WAY SOIL AND/OR GROUNDWATER CONTAMINATION

There is residual soil and/or groundwater contamination exists on the Hartmeyer property and the Canadian Pacific Railroad right-of-way at this site. Section NR 726.05(2)(a)4, Wis. Adm. Code, requires you to provide written notification of the presence of residual soil and

groundwater contamination to the Canadian Pacific Railroad where the right-of-way is located. Section NR 726.05(2)(b)4, Wis. Adm. Code, requires you to also provide written notice of the presence of residual groundwater contamination to the owner of any properties that you do not own within this site that do not have soil contamination if they are affected by groundwater contamination. These notifications were sent in October 2006. The affected property owners are advised that excavation of potentially contaminated soil or groundwater may pose inhalation or other direct contact hazards and will require soil and groundwater sampling and analysis, as well as proper storage, treatment, or disposal of any excavated materials, based upon the results of the analysis.

When the above conditions have been satisfied, please submit the appropriate documentation (for example, well abandonment forms, disposal receipts, copies of correspondence, etc.) to verify that applicable conditions have been met, and your case will be closed. Your site will be listed on the DNR Remediation and Redevelopment GIS Registry of Closed Remediation Sites. Information that was submitted with your closure request application will be included on the GIS Registry. To review the site on the GIS Registry web page, visit http://maps.dnr.state.wi.us/brrts.

Please be aware that the case may be reopened pursuant to s. NR 726.09, Wis. Adm. Code, if additional information regarding site conditions indicates that contamination on or from the site poses a threat to public health, safety, or welfare or to the environment.

We appreciate your efforts to restore the environment at this site. If you have any questions regarding this letter, please contact me at the telephone number shown below.

Sincerely,

Dino Tsoris, P.G.
Hydrogeologist
Remediation & Redevelopment Program
South Central Region
Wisconsin Department of Natural Resources
Telephone: (608) 275-3299

CC: Mr. John Tweddale, BT2, Inc., 2830 Dairy Drive, Madison, WI53718-6751
Ms. Andrea H. Johns, P.O. 833374, Richardson, TX 75083
John Hartmeyer Estate, C/O John Pike and J.R. Pike Corporation, 433 Woodward Drive, Madison, WI 53704-1529
Mr. Timm P. Speerschneider, DeWitt Ross & Stevens, Two East Mifflin Street, Suite 600, Madison, WI 53703-2865
Mr. William M. Tuttle, Canadian Pacific Railway, 501 Marquette Avenue S., Minneapolis, MN 55402

PARCEL IDENTIFICATON NUMBERS

Hartmeyer – Aboveground Storage Tank Area
2007 Roth Street, Madison, Wisconsin

Hartmeyer Estate Property – 0810-313-0099-0

Canadian Pacific Railways Property (right-of-way) – 0810-313-0081-7

ATTACHMENT I

Required GIS Registry Information

I-1	Copy(s) of Most Recent Deed
I-2	Copy of Parcel Map(s)
I-3	Parcel Identification Number
I-4	Geographic Position
I-5	Site Location Map
I-6	Site Area Map
I-7	Site Map
I-8	PVOC Concentrations in Groundwater Geoprobe Locations (Table)
I-9	DRO, VOC, and PVOC Concentrations in Groundwater at Monitoring Well Locations (Table)
I-10	PAH Concentrations in Groundwater (Table)
I-11	Summary of Product Removal at MW5 (Table)
I-12	DRO, GRO, and PVOC Concentrations in Soil (Table)
I-13	PAH Concentrations in Soil (Table)
I-14	Approximate Extent of NR 140 ES Exceedances and Petroleum Product
I-15	Water Level Summary Table
I-16	Water Table Map for September 9, 2005
I-17	Water Table Map for June 21, 2006
I-18	Areas Where DRO Concentrations in Shallow Soil (≤ 4') Exceed 1,000 mg/kg
I-19	Benzo(a)anthracene and Benzo(a)pyrene Concentrations in Shallow Soil (≤ 4')
I-20	Cross Section Location Map
I-21	Geologic Cross Sections A-A' and B-B'
I-22	Statement That all Legal Descriptions for Properties Within the Contaminated Site Boundaries Have Been Included
I-23	Notification to On-Source Property Owner from Tenant
I-24	Notification to Railroad Regarding Contamination in Right-of-Way
I-25	List of Addresses of all Properties Affected

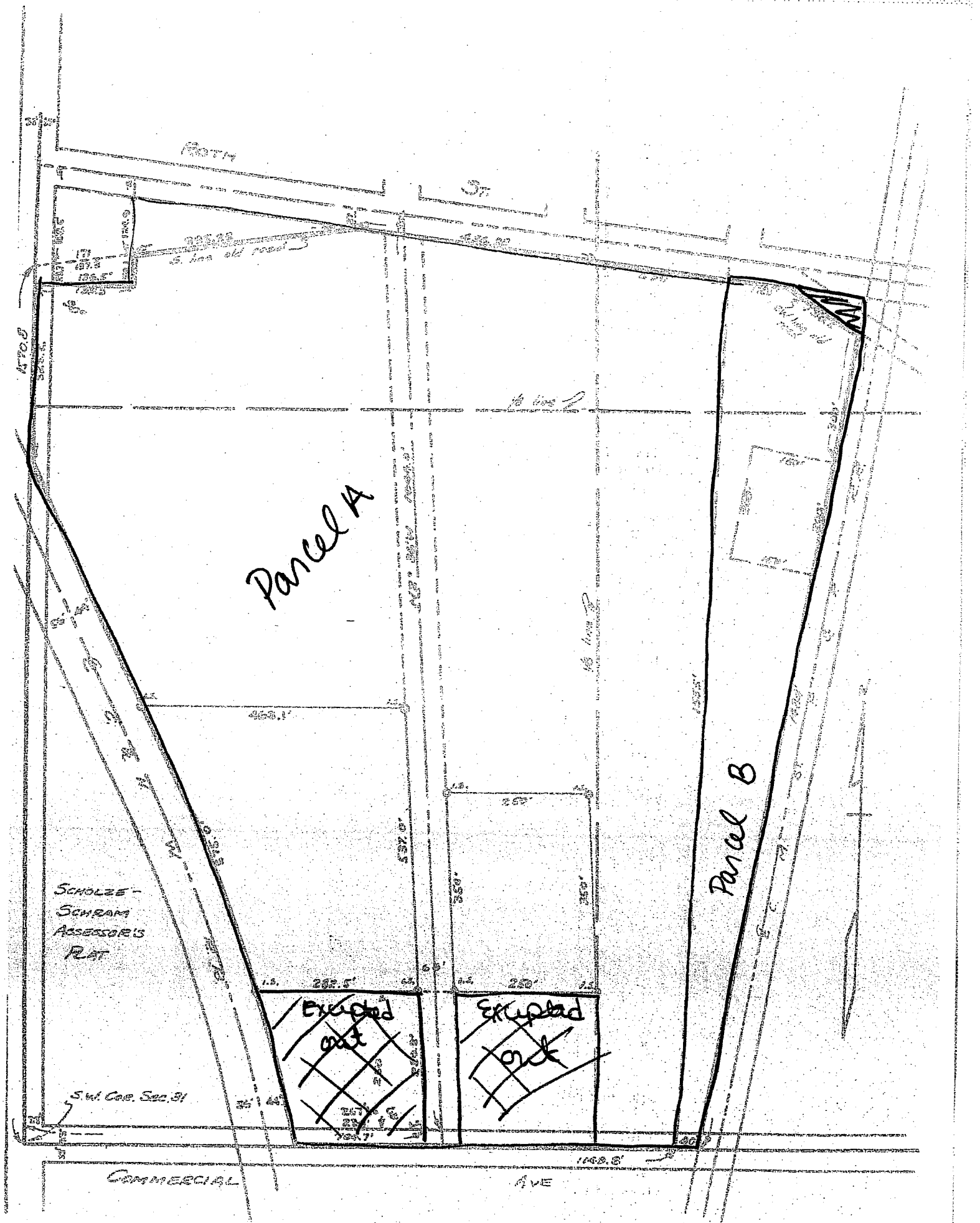
Parcel A
Parcel B
Excluded out
Excluded out
Scholze-Schram Assessor's Plat
S.W. Cor. Sec. 31
Commercial Ave
1448.8'
282.5'
250'
463.1'
597.0'
350'
350'
260'

Parcel A.

- Originally owned By John Hartmeyer Sr.
  - Died 1953
- Tranferred Property to:
  John Jr (Son)
  Helen Pike (Daughter)
  Margaret (Daughter)
  Betty Mall (Daughter)
  John Pike (Grandson)
- By Final Judgment Dated Sept 1961.
- Legal correction of final Judgment June 1973
  - Best Readable legal on this Document
- Final Judgment for when Helen Pike dies
  Transferring her 1/5 to son John Pike
- Warranty Deed 1972 John Jr transfers his 1/5 to Hartmeyer Inc.

Current owns & their Shares.

Hartmeyer Inc. 1/5
Margaret 1/5
Betty 1/5
John Pike 2/5

State of Wisconsin, County Court, DANE County

JUDGMENT ALLOWING FINAL ACCOUNT AND ASSIGNING ESTATE

STATE OF WISCONSIN
DANE COUNTY COURT
FILED
SEP 28 1961
CARL FLOM, JUDGE

At a term of said Court held at the City of Madison, on the 28th day of ~~January~~ Sept. 1, 19~~55~~61

Present, Hon. ~~George Kronicke Jr.~~ CARL FLOM Judge Presiding.

IN THE MATTER OF THE ESTATE OF

JOHN HARTMEYER, Deceased.

The application of John Hartmeyer Jr., as executor of the estate of John Hartmeyer, deceased, late of the City of Madison, Dane County, State of Wisconsin, for the settlement and allowance of his final account, for the determination of who are the heirs of said decedent, the determination of inheritance tax for construction of a part of decedent's will, and for the assignment of the residue of said estate to such persons as are by law entitled thereto, coming on to be heard at this term; and, it appearing that notice of the time and place of hearing has been ~~duly published, posted at the Court House door, the Court House and the decedent's place of abiding, and~~ duly waived by all persons interested, and that due notice has heretofore been given of the taking of proofs of who are the heirs of said decedent; and Braathen and Sachtjen attorneys for the executor by Sverre O. Braathen, having appeared at said hearing.

And after hearing the evidence and upon examination of the accounts and vouchers, the Court finds:

1. That the amount properly charged to the said executor is $ 35,378.83

2. That the amount properly allowed and credited to his account is $ 17,869.38

Balance $ 17,509.45

3. That the residue in his hands consists of balance in checking account with the American Exchange Bank of Madison, Wisconsin;

4. That the said John Hartmeyer, deceased, died seized of the following described real estate, to-wit: (Describe homestead separately, and state in what County each parcel of real estate is situated) Part of the West half (W½) of the Southwest Quarter (SW¼) of Section Thirty-one (31), Town Eight (8), North, Range Ten (10) East, (Township of Burke), Dane County, Wisconsin, which is described as follows:

Beginning at the point of intersection of the South line of Section Thirty-one (31) and the East right of way of the Chicago and Northwestern Railroad;

Thence Northwesterly along said East right of way line, 1307.6 feet to the center line of Sherman Avenue;

Thence North along Sherman Avenue, 325.2 feet;

Thence East, at right angles to the center line of Sherman Avenue 169.5 feet to the Southeast corner of land described in Volume 407 of Deeds on page 6, Dane County Registry;

File No.

No. 88 P (Rev. 1948) JUDGMENT ALLOWING FINAL ACCOUNT AND ASSIGNING ESTATE

Thence North and parallel to the center line of Roth Avenue 1048.8 feet;

Thence Southwesterly along the Westerly line of land described in Volume 211 of Deeds on page 553, Dane County Registry, 1555.0 feet to the South line of Section Thirty-one (31);

Thence West along the South line of Section Thirty-one (31), 669.5 feet to the point of beginning.

5. That at the time of his death decedent had a life estate in the following described property, to-wit: Part of Lots 17 and 18 in Block 51, Madison, Wisconsin, described as follows: Commencing at the SW corner of Lot 18, Block 51; thence on the rear line of said Lots 18 and 17 a distance of 132 feet to the Northwest corner of said Lot 17; thence Southeast on Northeast line of Lot 17 a distance of 51 feet; thence Southwest a distance of 132 feet to Broom Street; thence Northwest along Broom Street 51 ft. to beginning; excepting and reserving the use of an alley way 10 feet wide on Broom St., extending back 132 feet on Southeast side of premises above described, the alley to be reserved for use of owners of all the properties lying along Southeast side of property so described, Dane County, Wisconsin.

The real estate described in Warranty deed from William Gird Beecroft and wife, Lucy A. Beecroft to Margaret Hartmeyer, dated October 26, 1907, and recorded in the Office of the Register of Deeds for Dane County, Wisconsin, on October 29, 1907, in Vol. 211 of Deeds on page 553 and as document no. 283604.

6. That the provision of the will of said deceased as here stated, to-wit: "All the rest, residue and remainder of my estate, both real and personal, I give, devise and bequeath to my son, John Hartmeyer Jr., my daughters, Helen Pike, Margaret Hartmeyer and Betty Mall, and my grandson, John Pike, share and share alike, being to each a one fourth part thereof, etc." properly construed to convey the intention of the testator as gathered from the whole will and the surrounding circumstances, hereby is construed to have the force and effect that the interest given, bequeathed and devised to the named persons is a one fifth part of the rest, residue and remainder of decedent's estate, and it is so ordered accordingly;

6. That all inheritance, estate and income taxes, if any, for which said estate is liable, have been determined and paid, and that the statutory provisions for the perpetual care of lot or grave of decedent have been complied with.

7. That the said John Hartmeyer died testate on the 22nd day of July, 19 53, and was survived by the following named heirs and beneficiaries: John Hartmeyer Jr, a son, Helen Pike, a daughter, Margaret Hartmeyer, a daughter, and Betty Mall a/k/a Moll, a daughter, heirs, and John Pike, beneficiary;

8. That $2,000.00 has been paid Helen Pike, all according to the terms and provisions of the Last Will and Testament of the decedent, and that a receipt is on file therefor;

WHEREFORE, IT IS ORDERED AND ADJUDGED, That the account of said John Hartmeyer Jr., executor as stated aforesaid, be and the same is hereby allowed.

Dated,

That the residue of said personal estate consisting of the money, goods, chattels, rights and credits aforesaid be and the same is hereby assigned to John Hartmeyer Jr., Helen Pike, Margaret Hartmeyer, Betty Mall and John Pike, share and share alike, being to each a one fifth part thereof, in accordance with the terms of the last will and testament of the decedent;

That the life estate of the decedent in the property described in Finding 5a above terminated on the date of his death;

IT IS FURTHER ORDERED AND ADJUDGED, That the real estate described at Finding 4 above be and the same is hereby assigned, as of the date of the death of said decedent, as follows: to John Hartmeyer Jr., Helen Pike, Margaret Hartmeyer, Betty Mall a/k/a Moll, and John Pike, share and share alike, being to each a one fifth part thereof, upon the express condition, however, that my real estate in the Town of Burke, Dane County, Wisconsin, and fronting on Commercial Avenue and Roth Street and Sherman Avenue is not to be sold until ten (10) years after my death without the written consent and authorization to such sale by my son, John Hartmeyer Jr.,

in accordance with the terms of the last will and testament of said decedent.

Dated January 28, 19 61

By the Court,

Judge.

Recorded in Vol. Page No.

STATE OF WISCONSIN PROBATE COURT DANE COUNTY

STATE OF WISCONSIN
DANE COUNTY COURT
FILED
JUN 18 1973
R. CHARLES TOOD, JUDGE

IN THE MATTER OF THE ESTATE OF

JOHN HARTMEYER,
DECEASED

PETITION AND ORDER

AMENDING JUDGMENT

SO AS TO CORRECT

CLERICAL ERROR

Case No. 70-428

STATE OF WISCONSIN)
) ss
COUNTY OF DANE)

State of Wisconsin
County of Dane
This document is a true and correct copy of the original on file and of record in my office and has been compared by me.
Dated
By
Deputy Clerk

Carlyle H. Whipple, having been first duly sworn, states that:

1. He is the attorney for the present heirs of John Hartmeyer who died testate on July 22, 1953 seized of the following described real estate together with other properties as per the verified Inventory filed in the estate on October 27, 1953, to wit:

Part of the West half (W 1/2) of the Southwest Quarter (SW 1/4) of Section Thirty one (31), Town Eight (8) North, Range Ten (10) East, (Township of Burke), Dane County, Wisconsin, which is described as follows:

Beginning at the point of intersection of the South line of Section Thirty one (31) and the East right of way of the Chicago and Northwestern Railroad;
Thence Northwesterly along said East right of way line, 1307.6 feet to the center line of Sherman Avenue;
Thence North along Sherman Avenue, 325.2 feet;
Thence East, at right angles to the center line of Sherman Avenue 169.5 feet to the Southeast corner of land described in Volume 407 of Deeds on page 6, Dane County Registry;
Thence North and parallel to the center line of Sherman Avenue 160.8 feet to the South line of Roth Avenue;
Thence Southeasterly along the South line of Roth Avenue; 1048.8 feet;
Thence Southwesterly along the Westerly line of land described in Volume 211 of Deeds on page 553, Dane County Registry, 1555.0 feet to the South line of Section Thirty One (31);
Thence West along the South line of Section Thirty One (31), 669.5 feet to the point of beginning.

When the Final Judgment in this estate was entered on September 28, 1961, a clerical error occurred in the description of the real estate so as to make the Final Judgment not in compliance with the correct legal description as per the Inventory.

Wherefore, it is prayed that the Judgment be amended to reflect the correct legal description as per above stated from

the Inventory.

Carlyle H. Whipple

STATE OF WISCONSIN)
) ss
COUNTY OF DANE)

Subscribed and sworn to
before me this 18th day of
June, 1973.

Mark E. Musolf, Notary Public
State of Wisconsin, Dane County
My Commission is permanent.

Upon the foregoing Petition,

IT IS ORDERED, that:

1. The Final Judgment of September 28, 1961 in this estate shall be amended to correct the clerical error contained therein so that the foregoing legal description shall be the legal description of the said real estate.

2. The Judgment in all other respects is hereby reaffirmed.

DATED this 18th day of June, 1973.

BY THE COURT

P. Charles Jones, Judge R.P.

MCBURNEY, MUSOLF & WHIPPLE, S.C.
111 SOUTH FAIRCHILD STREET
MADISON, WISCONSIN 53703

No. 38P (Rev. 1954) FINAL JUDGMENT.

1368181

VOL. 447 PAGE 74

STATE OF WISCONSIN
DANE COUNTY COURT
FILED
AUG 16 1961
CARL H. PROBATE

STATE OF WISCONSIN DANE COUNTY COURT

IN THE MATTER OF THE ESTATE OF
HELEN ANN H. PIKE
Deceased.

File No.

PETITION for final settlement of this estate having been presented and heard, and the petitioner having appeared ~~in person and~~ N.C.A. by attorney and Lyall T. Beggs

having appeared as Public Administrator,

And on all the evidence, records and proceedings herein, the Court now finds:

1. That the petition came on for hearing upon notice as provided by law to all persons interested;

2. That notice has been given of the taking of proofs of who are the heirs of said deceased;

3. That the expenses of administration, funeral, last sickness, and the debts of the deceased have been paid; that the certificate of the Assessor of Incomes shows that there is no unpaid income tax; that said estate is subject to inheritance tax which has been paid ~~(or) is not subject to inheritance tax.~~

4. That there remains personal property for distribution as follows: all of that disclosed in the inventory.

5. That the deceased died seized of the following real property: all of that disclosed in the inventory, and described as follows: Part of the W½ of the SW¼ of Sec. 31, T8N, R10E, Township of Burke, Dane Co., Wis., now in the City of Madison, described as follows: Beginning at the point of intersection of the S. line of Sec. 31 and the E. right of way of the Chicago and Northwestern Railroad: Thence NW along said E. right of way line, 1307.6 ft. to the center line of Sherman Ave; thence N. along Sherman Ave., 325.2 feet; Thence E. at right angles to the center line of Sherman Ave., 169.5 ft. to the SE. corner of the land described in Vol. 407 of Deeds on p. 6, Dane Co. Registry; thence N. and par. to the center line of Sherman Ave. 160.8 ft. to the S. line of Roth Ave; thence SE along the S. line of Roth Ave., 1048.8 feet; thence SW. along the Westerly line of land described in Vol. 211 of Deeds on p. 553, Dane Co. Registry 1515.0 ft. to the S. line of Sec. 31; thence W. along the S. line of Sec. 31, 669.5 feet to the point of beginning. The land described in the deed recorded in Vol. 211 of Deeds on page 553, Dane Co. Registry., the same being an undivided one fifth interest in the same as a tenant in common with others.

AVE 35924 RN1373 K 2.00 -

Return to atty. Fred Suhr.

6. That the deceased died seized of the following real property in joint tenancy with John R. Pike and Ann Pike who survived deceased; as disclosed in the inventory.

7. That the deceased at the time of his death owned certain personal property in joint tenancy as set forth in the Inventory on file.

8. That the deceased at the time of his death had a life estate in the following property: none

NOW, THEREFORE, IT IS DETERMINED, ADJUDGED AND DECREED

That Helen Ann H. Pike died testate on the 1st day of March 1960 and that the following were the only heirs-at-law of the deceased: John Robert Pike, a/k/a John R. Pike, a son

VOL 447 PAGE 76

IT IS FURTHER ADJUDGED AND DECREED

That all accounts of the executor on file herein are allowed.

That the personal property be distributed as follows: to John Robert Pike, in accordance with the terms of the last will of the deceased.

That the real property described at Finding 5 is hereby assigned and transferred as of the date of the death of the deceased, as follows: to John Robert Pike, in accordance with the terms of the will of the deceased.

Office of Register of Deeds
Dane County, Wisconsin } ss.

Recorded June 14 1973
At 4:05 o'clock P. M.
Harold K. Hill, Register

State of Wisconsin
County of Dane

This document is a full, true and correct copy of the original on file and of record in my office and has been compared by me.

Attest: June 14, 1973

By: Robert R. Pekowsky
Robert R. Pekowsky
Register in Probate

That the interest of the deceased as joint tenant in real and personal property terminated at death.

~~That the life estate of the deceased in the real and personal property terminated at death.~~

Dated ~~June~~ Aug. 16, 19 61

By the Court,

County Judge.

Recorded in Vol. _____ Page _____

1,913,97

WARRANTY DEED

Vol. 400 page 156

THIS INDENTURE WITNESSETH, That John Hartmeyer and Betty W. Hartmeyer, his wife, of Delaware County, in the State of Indiana, DO HEREBY convey and warrant to Hartmeyer, Inc., an Indiana corporation, of Delaware County, Indiana, for and in consideration of the sum of One Dollar ($1.00) and other valuable consideration the receipt whereof is hereby acknowledged, the following described real estate in Dane County, in the State of Wisconsin, to-wit:

✓ An undivided one-fifth (1/5) interest in and to the following:

Part of the West half (W½) of the Southwest Quarter (SW¼) of Section thirty-one (31), Town eight (8) North, Range 10 East, Township of Burke, Dane County, Wisconsin, now in the City of Madison, described as follows:

Beginning at the point of intersection of the South line of Section 31 and the East right of way of the Chicago and Northwestern Railroad;

Thence Northwesterly along said East right of way line 1307.6 feet to the center line of Sherman Ave;

Thence North along Sherman Avenue, 325.2 feet;

Thence East, at right angles to the center line of Sherman Ave. 169.5 feet to the Southeast corner of the land described in Vol. 407 of Deeds on page 6, Dane County Registry;

Thence North and parallel to the center line of Sherman Ave. 160.8 feet to the South line of Roth St;

Thence Southeasterly along the South line of Roth St., 1048.8 feet;

Thence Southwesterly along the Westerly line of land described in Vol. 211 of Deeds on page 553, Dane County Registry, 1555.0 feet to the South line of Section thirty-one (31);

Thence West along the South line of Section 31, 669.5 feet to the point of beginning.

EXCEPT the following:

The following described real estate situated in part of the SW 1/4 of Section 31, T8N, R10E, City of Madison, Dane County, Wisconsin, more fully described as follows: Commencing at the SW corner of Section 31, T8N, R10E, City of Madison, Dane County, Wisconsin; thence E 470.7 feet along the S line of said Section 31 (said S line being the center line of Commercial Avenue); thence N 33 feet on a line that is parallel to the W line of said Section 31, to a point in the N line of Commercial Avenue, said point being the point of intersection of the N line of Commercial Avenue with the Easterly right-of-way line of the Chicago, Northwestern Railway; said point also being the point of beginning of the property to be described; thence Northwesterly 256.75 feet along the Easterly right-of-way line of said railway to the South line of the property leased to Yellow Truck Lines Incorporated of Madison as described in Vol. 197, Miscellaneous, Page 220 and recorded in the Dane County Register of Deeds office; thence Easterly 282.25 feet along a line that is

DEC 6 1972

TRANSFER

$.50

FEE PAID

parallel to the center line of Commercial Avenue to the W line of Ruskin Street (Private Street); thence S 2° 08'52"E, 250.3 feet along the W line of Ruskin Street to the N line of Commercial Avenue; thence W 234 feet along the N line of Commercial Avenue to the point of beginning, and

Commencing at the SW corner of Section 31, T8N, R10E, City of Madison, Dane County, Wisconsin, thence E 770.7 feet along the S line of said Section 31 (said S line being the center line of Commercial Avenue); thence N 33 feet on a line that is parallel to the W line of said Section 31 to a point in the N line of Commercial Avenue, said point being the point of intersection of the E line of Ruskin Street (Private Street) with the N line of Commercial Avenue, last mentioned point also being the point of beginning of the property to be described; thence N02°08'52"W 250.3 feet along the E line of Ruskin Street to the SW corner of the property leased to Wheeler Transfer and Storage Company as recorded in Vol. 227 of Miscellaneous on page 559, and recorded in the Dane County Register of Deeds office; thence E 250 feet along a line that is parallel to the center line of Commercial Avenue; thence S 02°08'52"E 250.3 feet to a point in the N line of Commercial Avenue; thence W 250 feet along the N line of Commercial Avenue to the point of beginning.

ALSO EXCEPTING the following:
Part of the SW 1/4 of Section 31, T8N, R10E, City of Madison, Dane County, Wisconsin more fully described as follows: Beginning at a point on the S line of Roth Street said point being 20 ft. W of the W right-of-way line of the Chicago, Milwaukee, St. Paul & Pacific Railroad measured along the said S line; thence on a curve to the right convex to the S having a radius of 60 ft. and a long chord that bears S78°01'W 111.2 ft. to a point of compound curve; thence on a curve to the left convex to the NE having a radius of 100 ft. and a long chord that bears N 58°54'W 83.8 ft. to a point on the S line of Roth Street; thence S83°42'E 181.7 ft. along the S line of Roth Street to the point of beginning.

Said conveyance is made subject to outstanding leases for certain portions of the real estate.

IN WITNESS WHEREOF, the said John Hartmeyer and Betty W. Hartmeyer, his wife, have hereunto set their hands and seals this 30 day of November, 1972.

John Hartmeyer
(John Hartmeyer)

Betty W. Hartmeyer
(Betty W. Hartmeyer)

WITNESSES:

Earl D. DeFoe

Barbara Stephens

DEC 6 1972

VOL. 400 PAGE 187

DEC 6 1972

STATE OF INDIANA)
) SS: VOL. 400 PAGE 188
DELAWARE COUNTY)

Before me, the undersigned, a Notary Public in and for said County and State, personally appeared the within named John Hartmeyer and Betty W. Hartmeyer, his wife, who acknowledged the execution of the foregoing deed to be their voluntary act and deed.

WITNESS my hand and seal this 30th day of November, 1972.

Earl G. De Fur

NOTARY PUBLIC

My commission expires

January 21, 1973.

This instrument prepared by Earl G. De Fur.

Office of Register of Deeds }
Dane County, Wisconsin } ss.

Recorded Dec. 6 1972

At 1:10 o'clock P.M.

Harold K. Hill, Register

Parcel B:

Margaret Hartmeyer Purchased 1907
Deed # 283604 - legal attached to this document.

Margaret Died -
in final Judgment as to Estate
Deeds/passes possession to Children
John Sr husband/as Gaurdian to
John Jr Son
Margaret Daughter
Helen Daughter
Elizabeth - Daughter

They Quit claim property to John Pike, Son to Daughter Helen.

Deed's # 1388679
1388680
1388681
1388682

Nothing Showing of record after that John Pike should Be Currently owner of Parcel B

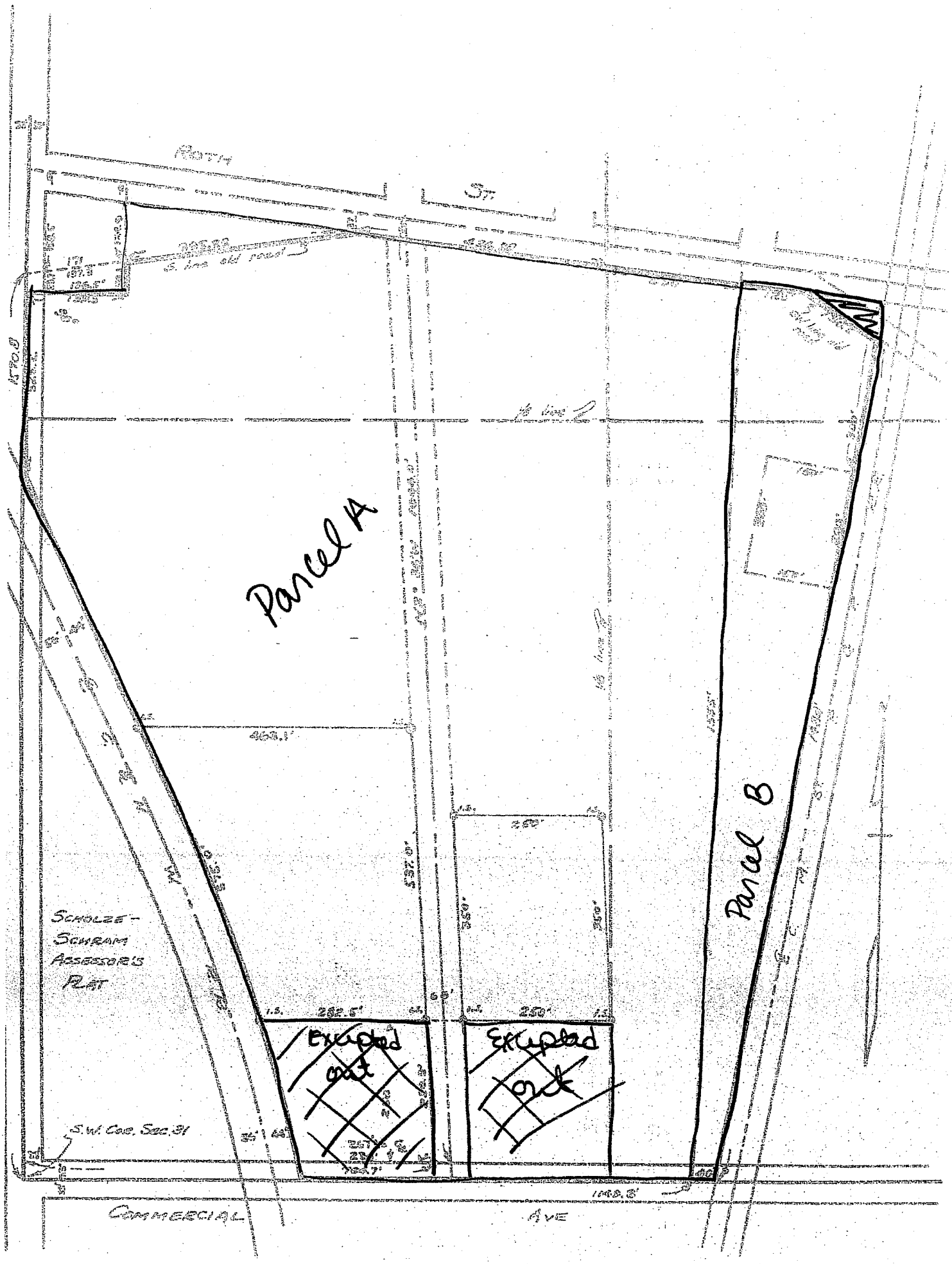
Parcel A
Parcel B
Excluded out
Excluded out
Scholze-Schram Assessor's Plat
S.W. Cor. Sec. 31
Commercial Ave
468.1'
262.5'
250'
537.0'
350'
350'
1148.8'

QUIT CLAIM DEED 1388679 STATE OF WISCONSIN FORM No. 13

Wisconsin Legal Blank Company Milwaukee, Wisconsin 15350

VOL. 496 PAGE 294

This indenture, made by John Hartmeyer Jr. and ~~Elizabeth~~ Betty Hartmeyer, his wife, grantor s, of Muncie, Indiana ~~County, Wisconsin~~, hereby **quit-claims to** John Pike grantee, of Dane County, Wisconsin, for the sum of One Dollar and other good and valuable consideration ($1.00)

the following tract of land in Dane County, State of Wisconsin: an undivided one fifth interest in and to the real estate described in the deed from William Gird Beecroft and wife, Lucy A. Beecroft to Margaret Hartmeyer, dated October 26, 1907, and recorded in the Office of the Register of Deeds for Dane County, Wisconsin, on October 29, 1907 in Vol. 211 of Deeds on page 553.

Office of ~~Register of Deeds~~
Dane County, Wisconsin } ss.
Recorded Feb. 5 1974
At 8 05 o'clock a.m.
Harold K. Hill, ~~Register~~

FEE
1 —
EXEMPT

In Witness Whereof, the said grantor s have hereunto set their hand s and seal s this 12th day of Jan, A. D., 1954

SIGNED AND SEALED IN PRESENCE OF

William C. Sachtjen

John Hartmeyer Jr. (SEAL)

~~Elizabeth~~ Betty Hartmeyer (SEAL)

(SEAL)

(SEAL)

State of ~~Wisconsin~~ Wis ~~INDIANA~~, } ss.
County.

Personally came before me, this 12th day of Jan, A. D., 1954, the above named John Hartmeyer Jr. and Elizabeth Hartmeyer, his wife, to me known to be the person s who executed the foregoing instrument and acknowledged the same.

William C. Sachtjen

Notary Public Dane County, Wis. ~~Ind.~~

My commission expires Feb 1 A. D., 1956

QUIT CLAIM DEED 1388680 STATE OF WISCONSIN FORM No. 13

Wisconsin Legal Blank Company Milwaukee, Wisconsin 18380

This indenture, made by Margaret Hartmeyer grantor, of Dane County, Wisconsin, hereby quit-claims to John Pike grantee, of Dane County, Wisconsin, for the sum of One Dollar ($1.00) and other good and valuable consideration the following tract of land in Dane County, State of Wisconsin: an undivided one fifth interest in and to the real estate described in the deed from William Gird Beecroft and wife, Lucy A. Beecroft to Margaret Hartmeyer, dated October 26, 1907, and recorded in the Office of the Register of Deeds for Dane County, Wisconsin, on October 29, 1907, in Vol. 211 of Deeds, page 553.

Office of Register of Deeds
Dane County, Wisconsin } ss.

Recorded Feb. 5 1974

At 8 05 o'clock A. M.

Harold K. Hill, Register

FEE

1 —

EXEMPT

In Witness Whereof, the said grantor has hereunto set her hand and seal this twelfth day of January, A. D., 1954.

SIGNED AND SEALED IN PRESENCE OF

Mrs. Niles Moody

Frederick H. Karls

Margaret Hartmeyer (SEAL)

(SEAL)

(SEAL)

(SEAL)

State of Wisconsin, } ss.
Dane County.

Personally came before me, this twelfth day of January, A. D., 1954, the above named Margaret Hartmeyer to me known to be the person who executed the foregoing instrument and acknowledged the same.

Notary Public Dane County, Wis.

My commission expires June 13 A. D., 1954

VOL. 496 PAGE 295

QUIT CLAIM DEED 1388681

STATE OF WISCONSIN
FORM No. 13

Wisconsin Legal Blank Company
Milwaukee, Wisconsin 15350

VOL. 496 PAGE 296

This indenture, made by Helen Pike

grantor, of Dane County, Wisconsin,

hereby quit-claims to John Pike

grantee, of Dane County, Wisconsin,

for the sum of One Dollar ($1.00) and other good and valuable consideration

the following tract of land in Dane County, State of Wisconsin: an undivided one fifth interest in and to the real estate described in the deed from William Gird Beecroft and wife, Lucy A. Beecroft to Margaret Hartmeyer, dated October 26, 1907, and recorded in the Office of the Register of Deeds for Dane County, Wisconsin, on October 29, 1907 in Vol. 211 of Deeds on page 553.

Office of Register of Deeds
Dane County, Wisconsin } ss.

Recorded Feb. 5 1974

At 8:05 o'clock a. m.

Harold K. Hill, Register

FEE

1

EXEMPT

In Witness Whereof, the said grantor has hereunto set her hand and seal this 11 day of June, A. D., 1954.

SIGNED AND SEALED IN PRESENCE OF

Janis Crandall

Marian S. Schellhorn

Helen Pike (SEAL)
Helen Pike

(SEAL)

(SEAL)

(SEAL)

State of Wisconsin,
Dane County. } ss.

Personally came before me, this 11 day of June, A. D., 1954, the above named Helen Pike

to me known to be the person who executed the foregoing instrument and acknowledged the same.

Notary Public Dane County, Wis.

My commission expires 10-2-57 A. D., 1957

QUIT CLAIM DEED 1388682 STATE OF WISCONSIN FORM No.-13

Wisconsin Legal Blank Company Milwaukee, Wisconsin 18380

This indenture, made by Elizabeth Mall a/k/a Betty Mall grantor, of Aurora, Illinois ~~County, Wisconsin~~, hereby quit-claims to John Pike grantee, of Dane County, Wisconsin, for the sum of One Dollar ($1.00) and other good and valuable consideration the following tract of land in Dane County, State of Wisconsin: an undivided one fifth interest in and to the real estate described in the deed from William Gird Beecroft and wife, Lucy A. Beecroft to Margaret Hartmeyer, dated October 26, 1907, and recorded in the Office of the Register of Deeds for Dane County, Wisconsin, on October 29, 1907, in Vol. 211 of Deeds, page 553.

Office of Register of Deeds
Dane County, Wisconsin } ss.

Recorded Feb. 5 1974 / FEE

At 8 05 o'clock A.M. # - 7 -

Harold K. Hill, Register EXEMPT

In Witness Whereof, the said grantor has hereunto set her hand and seal this 13th day of June, A. D., 1954.

SIGNED AND SEALED IN PRESENCE OF

Elizabeth Mall (SEAL)

(SEAL)

(SEAL)

(SEAL)

ILLINOIS
State of ~~Wisconsin~~,
Kane County. } ss.

Personally came before me, this 13th day of January, A. D., 1954, the above named Elizabeth Mall a/k/a Betty Mall to me known to be the person who executed the foregoing instrument and acknowledged the same.

Notary Public Kane County, Ill. ~~Wis.~~

My commission expires MY COMMISSION EXPIRES JUNE 24, 1957 A. D., 19

VOL 496 PAGE 297

VOL 16 PAGE 564

Form 172—FINAL JUDGMENT. Sec. 3940.

498415

STATE OF WISCONSIN, COUNTY COURT, DANE COUNTY

In Re Estate of
Margaret Hartmeyer
Deceased.

In Probate.

At the January Term, 1929
And on January 10th, 1929

Pursuant to the order of this Court herein, made on the 26th day of November 1928, the matter of the application of John Hartmeyer, executor, (~~or, administrator~~) of the estate of Margaret Hartmeyer, late of the City of Madison, in said county of Dane, deceased, for the allowance and adjustment of his final accounts for the determination of the inheritance tax, and for the assignment of the residue of said estate to the persons entitled thereto, coming on to be heard;

And it appearing that said final account has been duly filed, and that due notice of the time and place of such hearing has been given as required by law and said order;

And it further appearing that, after due notice to creditors to present claims and upon expiration of the time duly limited for the presentation thereof, No claims were filed against said estate. ~~the court duly examined and adjusted all claims presented against said deceased;~~

And said executor (~~or, administrator~~) having appeared personally and by Richmond, Jackman, Wilkie & Toebaas, his attorneys, (and Fred Risser, having duly appeared as guardian ad litem for the minors (~~and incompetents~~) herein);

Now, Therefore, upon the evidence and record herein, and upon examination of the accounts and vouchers of said executor (~~or, administrator~~), and being duly advised,—

The Court Finds and Determines:

That said executor (~~or, administrator~~) is properly chargeable with the sum of $ 7,812.00;

That he is properly credited with the sum $ 1799.93;

That there is a residue in his hands for distribution amounting to $ 12.07

That said residue consists of cash in the sum of $12.07 real estate as hereinafter described.

That said deceased died seized of the following described real estate, to-wit:

Lots 17 and 18, Block

day of November 1928, the matter of the application of John Hartmeyer, executor, (~~or, administrator~~) of the estate of Margaret Hartmeyer, late of the City of Madison, in said county of Dane, deceased, for the allowance and adjustment of his final accounts for the determination of the inheritance tax, and for the assignment of the residue of said estate to the persons entitled thereto, coming on to be heard;

And it appearing that said final account has been duly filed, and that due notice of the time and place of such hearing has been given as required by law and said order;

And it further appearing that, after due notice to creditors to present claims and upon expiration of the time duly limited for the presentation thereof, ~~the court duly examined and adjusted all claims presented against said deceased~~ No claims were filed against said estate.

And said executor (~~or, administrator~~) having appeared personally and by Richmond, Jackman, Wilkie & Toebaas, his attorney; (and Fred Risser, having duly appeared as guardian ad litem for the minors (~~and incompetents~~) herein)

Now, Therefore, upon the evidence and record herein, and upon examination of the accounts and vouchers of said executor (~~or, administrator~~), and being duly advised,—

The Court Finds and Determines:

That said executor (~~or, administrator~~) is properly chargeable with the sum of $ 7,912.00;

That he is properly credited with the sum $ 1799.93;

That there is a residue in his hands for distribution amounting to $ 12.07

That said residue consists of cash in the sum of 912.07 ~~Nothing to the following~~ real estate as hereinafter described.

That said deceased died seized of the following described real estate, to-wit:

Homestead. — Part of lots 17 and 18, Block 51, city of Madison, Dane County, Wisconsin, described as follows: Commencing at the southwest corner of said lot 18; thence on rear line of said lots 17 and 18, 132 feet to northwest corner of lot 17; thence southeast on northeast line of lot 17, 51 feet; thence southwest a distance of 132 feet to Broom Street; thence northwest along Broom street 51 feet to place of beginning, reserving and excepting the use of an alley way 10 feet wide on Broom street, extending back 132 feet on southeast side of the property so described.

The northwest 68 feet of lot 1, block 51, city of Madison, Dane County, Wisconsin, being 68 feet fronting on Washington Avenue and 68 feet fronting on Green Street in said city, according to the recorded plat thereof.

Part of southwest quarter of section 31, township 8 north, range 10 east, Dane County, Wisconsin, described as follows: Commencing at a point on the south line of said southwest quarter, section 31, [illegible] feet easterly from the southwest corner of said section; thence easterly along south line of said section a distance of 40 feet to the right of way of the C. M. & St. P. Ry. Co.; thence northeasterly along said right of way a distance of 1454 feet to south line of highway; thence northwesterly along said south line a distance of 130 feet to bend in highway; thence northwesterly along south line of highway a distance of 123 feet, said point being 230 feet southeast of the line of land owned by Henry Schram and Herman Schulze; thence southwesterly a distance of 1555 feet to place of beginning, containing 3 acres of land more or less lying adjacent to the right of way of C. M. & St. P. Ry. Co., except all buildings and equipment thereon which were at the time of the decease of Margaret Hartmeyer and now are the property of John Hartmeyer, of the city of Madison, Dane County, Wisconsin.

That all the heirs at law, with the degree of relationship and designation of minors, which said deceased left her surviving are the following, to-wit:

John Hartmeyer	Husband
John Hartmeyer, Jr.	Son
(attained age of 21, [illegible] 1926)	
Elizabeth Hartmeyer	Daughter
Margaret Hartmeyer	Daughter
Helen Hartmeyer Pike	Daughter

That the inheritance tax chargeable on the transfer of said estate has been determined and paid, [illegible]

WHEREFORE, IT IS ORDERED AND ADJUDGED, that the account of said executor as stated aforesaid, be and the same hereby is allowed;

And it appearing that a guardianship and trust is created by the will of said deceased for such of her children, as shall be under the age of twenty-one years, and it further appearing that Elizabeth Hartmeyer, one of said children, was at the time of the death of said Margaret Hartmeyer, and now is, under the age of twenty-one years, and it further appearing that John Hartmeyer, husband of said deceased, was designated as guardian and trustee in said will, to execute said trust;

THEREFORE, IT IS FURTHER ORDERED AND ADJUDGED, that John Hartmeyer, of the city of Madison, Dane County, Wisconsin, be and he hereby is appointed guardian and trustee [illegible] of Elizabeth Hartmeyer, a minor, to execute the said trust estate and trust herein created, and that he make, execute and direct and manage said estate in trust, under the direction of the County Court for Dane County, Wisconsin, for the use and benefit of the said Elizabeth Hartmeyer, until she becomes twenty-one years of age, and that upon the said Elizabeth Hartmeyer attaining the age of twenty-one years, he pay over and transfer to her, said estate and all the increase thereof, upon the filing and approval of a bond, as required by law, in the sum of [illegible] Dollars.

IT IS FURTHER ORDERED AND ADJUDGED, that the residue of said personal estate be and the same hereby is assigned, share and share alike, to, John Hartmeyer, Jr., Margaret Hartmeyer, Helen Hartmeyer Pike; and to John Hartmeyer, as guardian and trustee for Elizabeth Hartmeyer as aforesaid, being to hold a one-fourth part thereof, in accordance with the terms of the last will and testament of said deceased.

IT IS FURTHER ORDERED AND ADJUDGED, that a part of the real estate of which said deceased died seized, which was occupied as a homestead, being described as follows, to-wit:

Part of lots 17 and 18, Block 51, city of Madison, Dane County, Wisconsin, described as follows: Commencing at the southwest cownr of said lot 18, thence on rear line of said lots 17 and 18, 132 feet to northwest corner of lot 17; thence southeast on northeast line of lot 17, 51 feet; thence southwest a distance of 132 feet to Broom Street; thence northwest along Broom street 51 feet to place of beginning, reserving and excepting the use of an alley way 10 feet wide on Broom street, extending back 132 feet on southeast side of the property so described

be and the same hereby is assigned and transferred, share and share alike, to John Hartmeyer, Jr., Margaret Hartmeyer, Helen Hartmeyer Pike, and to John Hartmeyer, as guardian and trustee, for Elizabeth Hartmeyer, as aforesaid, being to each an undivided one-fourth part thereof, subject to an estate for life therein of John Hartmeyer, husband of said deceased, to use and enjoy said property during the remainder of his natural life, so long as the said John Hartmeyer shall remain unmarried, all in accordance with the last will and testament of said deceased.

IT IS FURTHER ORDERED AND ADJUDGED, that the residue of the real estate of which said deceased died seized, being described as follows, to-wit: -

The northwest 66 feet of lot 1, Block 51, city of Madison, Dane County, Wisconsin, being 66 feet fronting on Washington Avenue and 66 feet fronting on Broom street in said city, according to the recorded plat thereof.

Part of southwest quarter of section 31, township 8 North, range 10 east, Dane County, Wisconsin, described as follows: commencing at a point on the south line of said southwest quarter, section 31, distant 1149.8 feet easterly from the southwest corner of said section; thence easterly along south line of said section a distance of 40 feet to the right of way of the C. M. & St P. Ry. Co; thence northeasterly along said right of way a distance of 1484 feet to south line of highway; thence northwesterly along said south line a distance of 130½ feet to bend in highway; thence northwesterly along south line of highway a distance of 123 feet, said point being 230 feet southeast of the line of land owned by Henry Schram and Herman Scholze; thence southwesterly a distance of 1555 feet to place of beginning, containing 5 acres of land more or less lying adjacent to the right of way of C. M. & St P. Ry Co., except all buildings and equipment thereon which were at the time of the decease of Margaret Hartmeyer, and now are, the property of John Hartmeyer of the city of Madison, Dane County, Wisconsin.

be and the same hereby is assigned and transferred, share and share alike, to John Hartmeyer, Jr., Margaret Hartmeyer, Helen Hartmeyer Pike, and to John Hartmeyer, as guardian and trustee for Elizabeth Hartmeyer, as aforesaid, being to each an undivided one-fourth part thereof, all in accordance with the terms of the last will and testament of deceased.

By the Court,
F. Ryan Duffy
Judge

STATE OF WISCONSIN }
County of Dane } ss.

I, J. P. USHER, Clerk of the County Court within and for the county and state aforesaid, having legal custody of the original, do hereby certify that I have compared the above and foregoing copy of Final Judgment in the matter of the estate of Margaret Hartmeyer, deceased, with the original thereof now on file and of record in said Court, and that the above and foregoing is a full true and complete transcript of such Final Judgment.

IN TESTIMONY WHEREOF, I have hereunto set my hand, and affixed the seal of said Court, at my office, in the city of Madison, in said county, this 10th day of January, A. D. 1929.

J. Elkins

Clerk of the County Court of Dane County, Wisconsin.

STATE OF WISCONSIN } ss.
County of Dane

I, GEORGE KRONCKE, sole Judge of the County Court in and for said county, do hereby certify that the above named J. E. USHER, by whom the foregoing attestation was made, was at the time of making the same, and is now, the clerk of said court, as to all whose acts as such full faith and credit should be given as well in the courts of this jurisdiction as elsewhere; that the seal thereto attached is the seal of said county court, and which said attestation so made by him is in due form of law, and that he was entitled to make the same.

Witness my hand this 10th day of January, A. D., 1929.

George Kroncke

Judge of the County Court of Dane County, Wisconsin.

RECORDED
JAN 11 1929
At 10:40 o'clock A. m.

CANADA
PROVINCE OF ALBERTA } 498427

In the District Court of the District of Red Deer

Be it known that on the 31st day of October A.D. 1927 the last Will and Testament of Frank Hubbard late of Lacombe, Alberta, deceased, who died on or about the 19th day of October A.D. 1927 at Lacombe, Alberta, and who at the time of his death had a fixed place of abode at the Town of Lacombe, in the District of Red Deer, in the Province of Alberta, was proved and registered in the said District Court, a true copy of which said last Will and Testament is hereunder written, and that the administration of all and singular the property of the said deceased, and any way concerning such Will was granted by the aforesaid Court to Mary Hubbard,

the sole executrix named in the said Will she having been first sworn well and faithfully to administer the same by paying the just debts of the deceased, all taxes and duties payable in respect of his estate and the legacies contained in his Will so far as she is thereunto bound by law, and by distributing the residue (if any) of the property according to law, and to exhibit under oath a true and perfect inventory of all and singular the said property and to render a just and true account of her executorship and to surrender this grant whenever required by law to do so.

In Witness Whereof this grant has been issued, under the Seal of the Court, and attested with the signatures of the Judge and the Clerk thereof.

Judge.

Certified a true copy of which it purports to be a copy.

Clerk.

Clerk of the Court.

THIS IS THE LAST WILL AND TESTAMENT of me FRANK HUBBARD, of the Postoffice of Lakesend, in the Province of Alberta, Farmer, made this Nineteenth day of February, in the year of our Lord one thousand nine hundred and Eighteen.

I REVOKE all former Wills and other Testamentary Dispositions by me at any time heretofore made and declare this to be my last Will and Testament.

I DIRECT all my just debts and funeral and testamentary expenses to be paid and satisfied by my executrix hereinafter named.

I GIVE, DEVISE AND BEQUEATH all my real and personal estate which I may die possessed of or interested in, in the manner following, that is to say:

To my dear wife Mary Hubbard.

AND I nominate and appoint the said Mary Hubbard, to be sole executrix of this my last Will and Testament.

IN WITNESS WHEREOF I have hereunto set my Hand the day and year first above written.

SIGNED, PUBLISHED AND DECLARED by the said Frank Hubbard, the Testator as and for his Last Will and Testament, in the Presence of us, who both present together at the same time in his presence, at his request and in the presence of each other, have hereunto subscribed our names as witnesses.

Frank Hubbard

Name W. R. Odell,
Occupation Barrister-at-law,
Address Wetaskiwin, Alberta.

Name E. S. Courlie,
Occupation Stenographer,
Address Wetaskiwin, Alberta.

RECORDED
JAN 11 1929
at 2 40 o'clock P.M.

No. 28 3 2 4 a

This Indenture, Made this 2 8th day of October, in the year of our Lord one thousand nine hundred and seven (1907), between William Gird Beecroft and Lucy A. Beecroft, his wife of Madison, Dane County, Wisconsin.

party of the first part, and Margaret Hartmeyer of same place

party of the second part,

Witnesseth, That the said party of the first part, for and in consideration of the sum of Eight Hundred and Fifty ($850.00) Dollars, to them in hand paid by said party of the second part, the receipt whereof is hereby confessed and acknowledged, have given, granted, bargained, sold, remised, released, aliened, conveyed and confirmed, and by these presents do give, grant, bargain, sell, remise, release, alien, convey and confirm, unto the said party of the second part her heirs and assigns forever, the following described Real Estate, situate in the County of Dane and State of Wisconsin, to-wit:

That part of the South West Quarter of Section No. Thirty-one (31) township No. Eight (8) Northrange No. Ten East (10) bounded and described as follows: Commencing at a point on the South line of the south-west quarter said section thirty-one (31) distant eleven hundred forty-nine and eight-tenths (1149.8) feet Easterly from the South West corner of said Section. Thence easterly along said south line of section thirty-one (31) a distance of forty (40) feet to the right of way of the C. M. & St. P. Ry. Co. Thence northeasterly along said right of way a distance of fourteen hundred eighty-four (1484) feet to south line of highway. Thence northwesterly along said south line a distance of one hundred thirty and one half (130½) feet to land in highway. Thence northwesterly along south line of highway a distance of one hundred twenty-three (123) feet said point being two hundred thirty (230) feet south east of the line of the land owned by Henry Schramm and Hermann Scholze thence southwesterly a distance of fifteen hundred forty-five (1545) feet to place of beginning containing five (5) acres of land and being a part of the west quarter of Section thirty-one (31) township and range aforesaid.

Together with all and singular the hereditaments and appurtenances thereunto belonging, or in anywise appertaining; and all the estate, right, title, interest, claim or demand whatsoever, of the said parties of the first part, either in law or equity, either in possession or expectancy of, in and to the above bargained premises and their hereditaments and appurtenances, To Have and to Hold the said premises as above described, with the hereditaments and appurtenances, unto the said party of the second part and to her heirs and assigns forever.

And the said William Gird Beecroft and Lucy A. Beecroft for themselves, heirs, executors and administrators, do covenant, grant, bargain and agree to and with the said party of the second part, her heirs and assigns, that at the time of the ensealing and delivery of these presents they are well seized of the premises above described, as of a good, sure, perfect, absolute and indefeasible estate of inheritance in the law, in fee simple, and that the same are free and clear from all incumbrances whatever, and that the above bargained premises, in the quiet and peaceable possession of the said party of the second part her heirs and assigns, against all and every person or persons lawfully claiming the whole or any part thereof will forever Warrant and Defend.

In Witness Whereof, The said parties of the first part have hereunto set their hands and seals the day and year first above written.

SIGNED, SEALED AND DELIVERED IN PRESENCE OF

Sam J. Swanson

Agnes Carr

Wm. Gird Beecroft [SEAL]

Lucy A. Beecroft [SEAL]

being two hundred thirty (230) feet southeasterly of the line of the land owned by Henry Chisam and Hannah Chisam and thence southwesterly a distance of fifteen hundred forty five (1545) feet to place of beginning, containing five (5) acres of land and being a part of the ne ¼ of the ne ¼ lying adjacent to the right of way of C. M. & St. P. Railway company

Together with all and singular the hereditaments and appurtenances thereunto belonging, or in anywise appertaining, and all the estate, right, title, interest, claim or demand whatsoever, of the said parties of the first part, either in law or equity, either in possession or expectancy of, in and to the above bargained premises and their hereditaments and appurtenances, To Have and to Hold the said premises as above described, with the hereditaments and appurtenances, unto the said party of the second part and to her heirs and assigns forever.

And the said William Gird Beecroft and Lucy A. Beecroft for themselves, their heirs, executors and administrators, do covenant, grant, bargain and agree to and with the said party of the second part, her heirs and assigns, that at the time of the ensealing and delivery of these presents they are well seized of the premises above described, as of a good, sure, perfect, absolute and indefeasible estate of inheritance in the law, in fee simple, and that the same are free and clear from all incumbrances whatever and that the above bargained premises, in the quiet and peaceable possession of the said party of the second part her heirs and assigns, against all and every person or persons lawfully claiming the whole or any part thereof will forever Warrant and Defend.

In Witness Whereof, The said parties of the first part have hereunto set their hand s and seal s the day and year first above written.

Signed, Sealed and Delivered in Presence of

Sam J. Swanson
Agnes Carr

Wm. Gird Beecroft [SEAL]
Lucy A. Beecroft [SEAL]
[SEAL]
[SEAL]

STATE OF WISCONSIN, COUNTY OF DANE } ss.

Personally came before me this 26th day of October A. D. 1907 the above named William Gird Beecroft and Lucy A. Beecroft, his wife, to me known to be the persons who executed the foregoing instrument and acknowledged the same.

NOTARIAL SEAL

Sam J. Swanson
Notary Public, ~~Dane County~~, Wisconsin.

My Commission Expires September 20, 1908

Recorded Oct. 1907, at 1:45 o'clock P. M.

PARCEL IDENTIFICATON NUMBERS

Hartmeyer – Aboveground Storage Tank Area
2007 Roth Street, Madison, Wisconsin

Hartmeyer Estate Property – 0810-313-0099-0

Canadian Pacific Railways Property (right-of-way) – 0810-313-0081-7

GEOGRAPHIC POSITION

Hartmeyer – Aboveground Storage Tank Area
2007 Roth Street, Madison, Wisconsin

Hartmeyer Estate Property (see figure A-3):

WTM-91 Coordinates
N-S, E-W
572125, 292882
571973, 293135
571820, 293385
572212, 293340

Release Area Location:
572153, 293125

Canadian Pacific Railways Property (right-of-way) (see figure A-3):

WTM-91 Coordinates
N-S, E-W
572128, 292882
572125, 292882
572269, 293682
572240, 293682

Note: Coordinate locations are approximate, and were obtained using the WDNR's GIS Webpage.

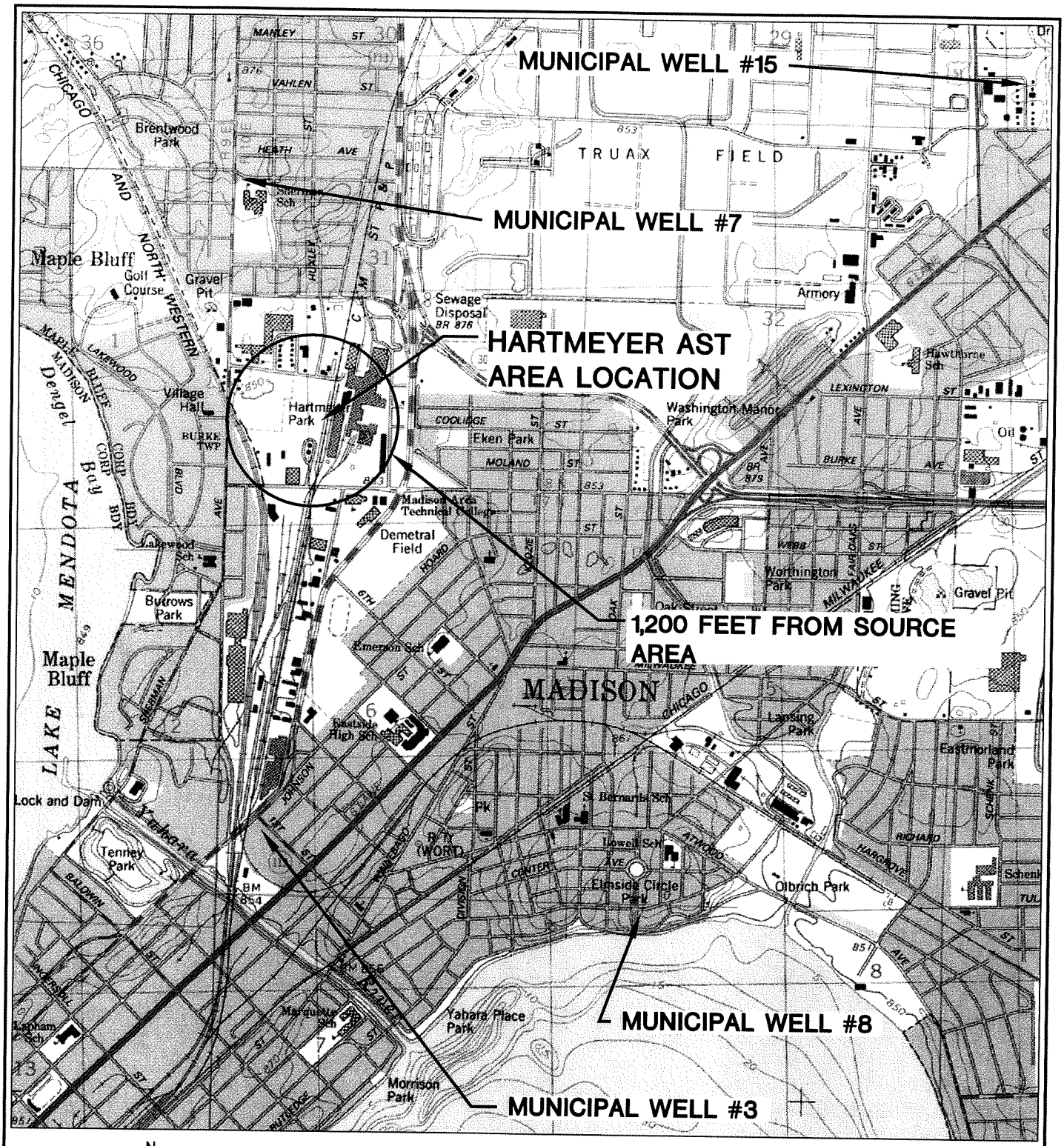

N

MADISON EAST QUADRANGLE
WISCONSIN–DANE CO.
7.5 MINUTE SERIES (TOPOGRAPHIC)
SE/4 MADISON 15' QUADRANGLE
1983
SCALE: 1" = 2,000'

PROJECT NO. 1624	
DRAWN BY: KP/WK	
CHECKED BY: JM	
APPROVED BY:	
DRAWN: 01/08/97	
REVISED: 08/18/06	

FIGURE A–2
SITE LOCATION MAP
HARTMEYER AST AREA
2007 ROTH STREET
MADISON, WISCONSIN

BT² inc.

I:\1624\Figures-General\site loc.dwg, 8/24/2006 11:07:39 AM

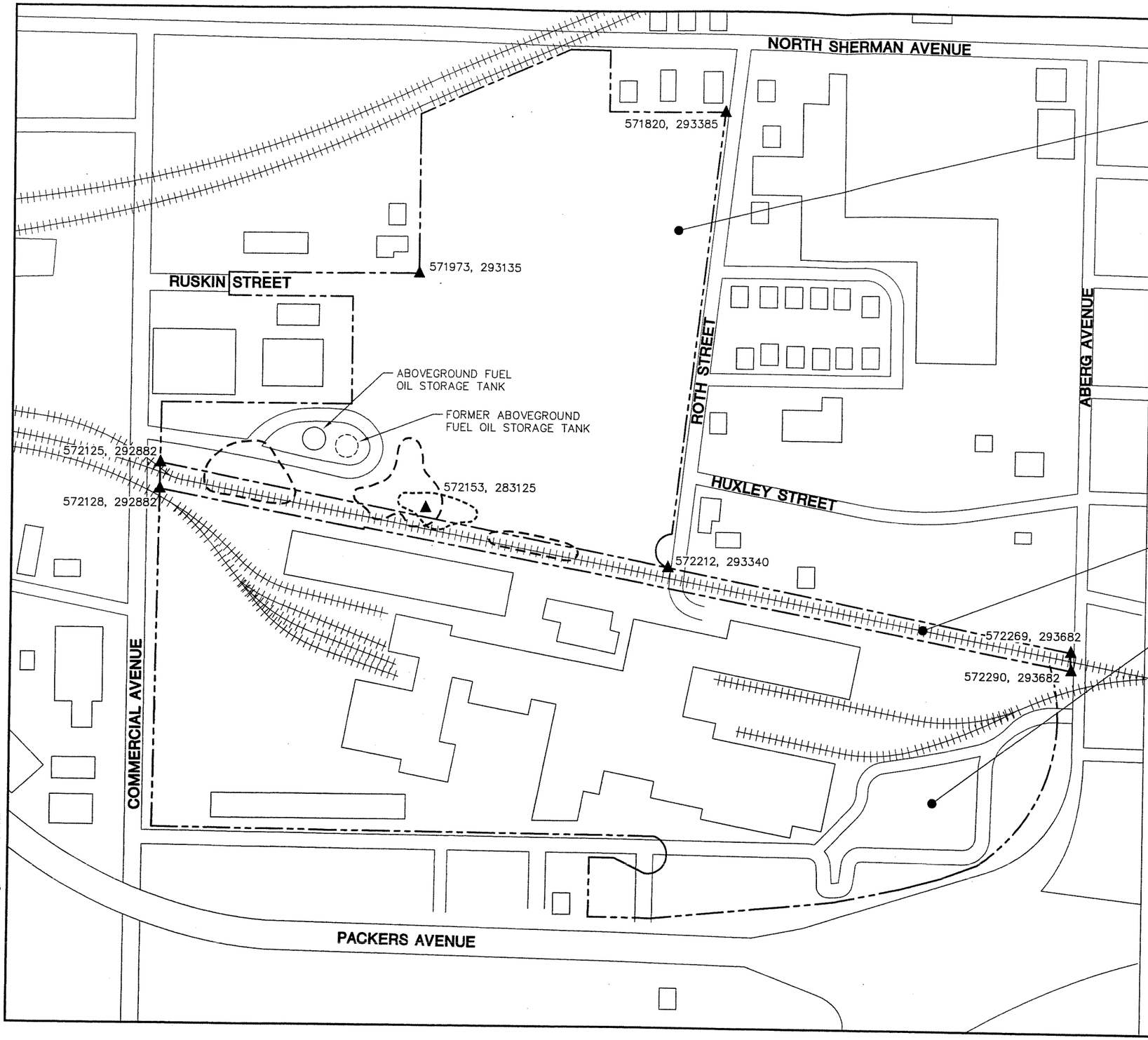

LEGEND

- RAILROAD TRACKS
- APPROXIMATE PROPERTY LINE
- APPROXIMATE EXTENT OF NR 140 ENFORCEMENT STANDARD EXCEEDANCES
- APPROXIMATE EXTENT WHERE DRO EXCEEDS 1,000 mg/kg IN SOIL
- 572290, 293682 ▲ WTM-91 COORDINATE

NOTES:

1. BUILDINGS, RAILROAD TRACK, AND STREET LOCATIONS BASED ON 1983 MADISON EAST QUADRANGLE MAP.
2. PROPERTY BOUNDARY LINES AND WTM-91 COORDINATE LOCATIONS ARE APPROXIMATE.
3. MAP SHOWS APPROXIMATE EXTENT OF IMPACT ASSOCIATED WITH HARTMEYER AREA ABOVEGROUND STORAGE TANK SYSTEM ONLY.

FIGURE A-3
SITE AREA MAP
HARTMEYER AST AREA
2007 ROTH STREET
MADISON, WISCONSIN

PROJECT NO. 1624	
DRAWN BY: KP	
CHECKED BY: JM	
DRAWN: 08/24/06	
REVISED: 08/29/06	

BT² inc.

I:\1624\Figures-General\site area.dwg, 8/29/2006 9:22:59 AM

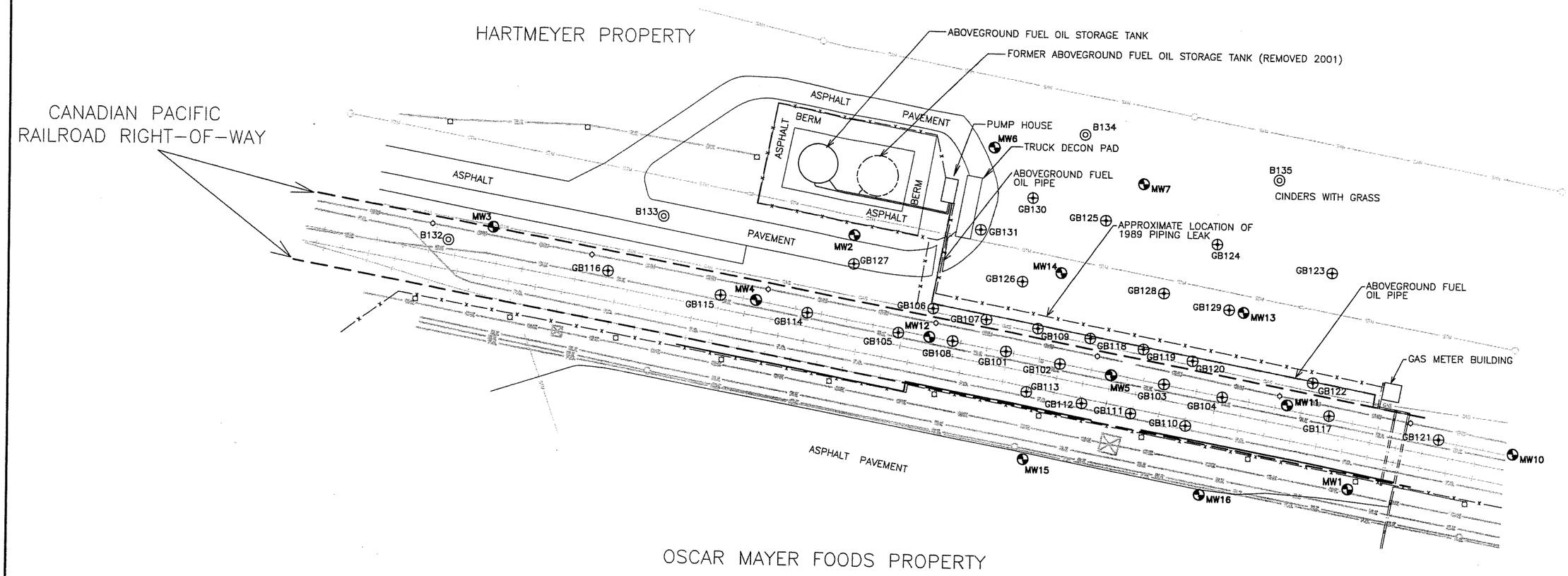

LEGEND

- CENTERLINE OF RAILROAD TRACK
- FENCE
- BURIED ELECTRIC
- BURIED FIBER OPTIC
- GAS MAIN
- BURIED TELEPHONE
- OVERHEAD ELECTRIC
- OVERHEAD UTILITY
- SANITARY SEWER
- STORM SEWER
- LIGHT POLE WITH CONCRETE BASE
- POWER POLE
- MANHOLE OR CATCH BASIN
- ELECTRIC TRANSMISSION TOWER
- RAILROAD PROPERTY LINE
- MONITORING WELL
- GEOPROBE BORING
- SOIL BORING

NOTES:

1. MAP ADAPTED FROM SITE SURVEY MAP BY NOTBOHM SURVEYING, OCTOBER, 2000.
2. FUEL RELEASE LOCATION OBTAINED FROM DAMES AND MOORE PRELIMINARY SITE ASSESSMENT REPORT DATED MAY, 1989.
3. DAMES AND MOORE INSTALLED MW1–MW5 DURING 1989 AND MW6–MW7 DURING 1992.
4. GEOPROBE BORINGS INSTALLED BY BT2, INC. DURING JUNE 12–15, 2001.
5. SOIL BORINGS B132–B135 AND MONITORING WELLS MW10–MW16 INSTALLED BY BT2 INC. DURING AUGUST 13–14, 2001.

N

100 0 100

SCALE: 1" = 100'

FIGURE E-6
SITE MAP
SOIL BORING AND MONITORING WELL LOCATIONS
HARTMEYER AST AREA
2007 ROTH STREET
MADISON, WISCONSIN

PROJECT NO. 1624	
DRAWN BY: KP/CS/WK	
CHECKED BY: JM	
DRAWN: 05/06/02	
REVISED: 08/18/06	

BT2 inc

I:\1624\Figures-General\survey\BORING_MW_LOC.dwg, 9/15/2006 9:03:52 AM

Table E-1
PVOC Concentrations in Groundwater at Geoprobe Locations
Hartmeyer AST Area / Project #1624
(Results are in µg/l unless otherwise noted)

Sample	Date	Lab Notes	Benzene	Ethylbenzene	Toluene	Xylenes	TMBs	MTBE
GB101	6/12/01	--	0.36	0.54	<0.40	0.78	4.9	<0.32
GB102	6/12/01	(1)	<0.26	<0.44	0.40	0.92	8.7	<0.32
GB103	6/12/01	(2)	**11**	180	22	390	291	<3.2
GB104	6/12/01	(2)	<1.3	90	<2.0	44	137	<1.6
GB105	6/12/01	(2)	<0.65	3.3	<1.0	4.8	28.0	<0.80
GB106	6/12/01	(2)	0.28	<0.44	<0.40	1.4	5.9	<0.32
GB107	6/12/01	(1)	<0.26	1.3	<0.40	0.84	3.5	<0.32
GB108	6/12/01	--	<0.65	1.1	<1.0	3.7	18.5	2.0
GB109	6/12/01	(2)	**15**	190	5.4	260	342	<3.2
GB110	6/13/01	--	<0.13	<0.22	0.43	0.32	<0.51	<0.16
GB111	6/13/01	--	<0.13	<0.22	0.21	<0.23	<0.51	<0.16
GB112	6/13/01	--	<0.13	<0.22	0.21	<0.23	<0.51	<0.16
GB113	6/13/01	--	<0.13	<0.22	0.37	0.43	0.25	<0.16
GB114	6/13/01	--	<2.6	18	<4.0	32	85	<3.2
GB116	6/13/01	(1)	0.18	0.39	0.21	0.61	0.61	<0.16
GB117	6/13/01	(1)	0.70	11	2.4	13	88	<0.80
GB118	6/13/01	--	**5.6**	63	<4.0	29	42	<3.2
GB119	6/13/01	(1)	<1,300	**130,000**	<2,000	**55,000**	**930,000**	<1,600
GB120	6/14/01	(2)	**10**	150	21	280	**1,040**	<8.0
GB121	6/14/01	(2)	3.4	13	<4.0	14	154	<3.2
GB122	6/14/01	(3)	<0.13	<0.22	0.24	<0.23	<0.51	<0.16
GB123	6/14/01	--	<0.13	<0.22	<0.20	<0.23	0.22	<0.16

Table E-1 (Continued)
PVOC Concentrations in Groundwater at Geoprobe Locations

Sample	Date	Lab Notes	Benzene	Ethylbenzene	Toluene	Xylenes	TMBs	MTBE
GB124	6/14/01	--	<0.13	<0.22	<0.20	<0.23	<0.51	<0.16
GB125	6/14/01	--	<0.13	<0.22	<0.20	<0.23	<0.51	<0.16
GB126	6/14/01	(2)	<6.5	130	<10	68	218	<8.0
GB127	6/14/01	--	0.17	3.0	0.60	6.6	5.8	<0.16
GB128	6/15/01	--	<0.13	<0.22	0.21	0.25	<0.51	<0.16
GB129	6/15/01	(1)	2.8	1.5	<0.20	<0.23	<0.51	<0.16
GB130	6/15/01	--	0.23	0.30	0.27	0.40	0.33	<0.16
GB131	6/15/01	(1)	<2.6	50	<4.0	25	167	<3.2
Trip Blank	6/13/01	--	<0.13	<0.22	<0.20	<0.23	<0.51	<0.16
	6/14/01	--	<0.13	<0.22	<0.20	<0.23	<0.51	<0.16
	6/15/01	--	<0.13	<0.22	<0.20	<0.23	<0.51	<0.16
NR 140 Enforcement Standards			5	700	1,000	10,000	480	60
NR 140 Preventive Action Limits			0.5	140	200	1,000	96	12

ABBREVIATIONS:
TMBs = 1,2,4- and 1,3,5-Trimethylbenzene MTBE = Methyl-tert-butyl ether AST = Aboveground Storage Tank PVOC = Petroleum Volatile Organic Compounds

NOTE:
Bold values exceed NR 140 enforcement standards.

LABORATORY NOTES:
(1) PVOCs analysis - Late eluting hydrocarbons present.
(2) PVOCs analysis - Late eluting hydrocarbons present and improperly preserved sample.
(3) PVOCs analysis - Improperly preserved sample.

By: LH
Date: Rev. 7/10/01
Checked: JM
Date: 7/16/01

I:\1624\Tables-General\Tables.wpd

Table E-2
DRO, VOC, and PVOC Concentrations in Groundwater at Monitoring Well Locations
Hartmeyer AST Area / Project #1624
(Results are in µg/l unless otherwise noted)

Sample	Date	Lab Notes	DRO (mg/l)	Benzene	Ethylbenzene	Toluene	Xylenes	TMBs	MTBE	Other VOCs
MW1	9/6/01	--	NA	<0.13	<0.22	<0.20	<0.23	<0.51	<0.16	NA
	12/21/01	--	NA	<0.13	<0.22	<0.20	<0.23	<0.51	<0.16	NA
	4/23/02	--	NA	<0.13	<0.22	<0.20	<0.23	<0.51	<0.16	NA
	7/22/02	--	NA	<0.31	<0.5	<0.3	<0.92	<0.71	<0.3	NA
	9/23/02	--	NA	<0.31	<0.5	<0.3	<0.92	<0.71	<0.3	NA
	12/18/02	--	NA	<0.31	<0.5	<0.3	<0.92	<0.71	<0.3	NA
	3/24/03	--	NA	<0.31	<0.5	<0.3	<0.92	<0.71	<0.3	NA
	6/9/03	--	NA	<0.31	<0.5	<0.3	<0.92	<0.71	<0.3	NA
	3/8/04	--	NA	<0.31	<0.5	<0.3	<0.92	<0.71	<0.3	NA
	3/8/05	(15)	NA	<0.500	<5.00	<5.00	<5.00	<10.00	<0.276	NA
	03/20/06	--	NA	<0.25	<0.22	<0.11	<0.39	<0.44	<0.23	NA
MW2	8/31/99	--	0.35	<0.13	<0.22	<0.20	<0.23	<0.51	<0.16	NA
	9/6/01	--	NA	<0.13	<0.22	<0.20	<0.23	<0.51	<0.16	NA
	12/20/01	--	NA	<0.13	<0.22	<0.20	<0.23	<0.51	<0.16	NA
	4/24/02	--	NA	<0.13	<0.22	<0.20	<0.23	<0.51	<0.16	NA
	7/23/02	--	NA	<0.31	<0.5	1.97	<0.92	<0.71	<0.3	NA
	9/24/02	--	NA	<0.31	<0.5	<0.3	<0.92	<0.71	<0.3	NA
	12/19/02	--	NA	<0.31	<0.5	<0.3	<0.92	<0.71	<0.3	NA

Rev. by: JSP 8/28/02; TLR 11/25/02, 01/24/03, 02/04/03; LMH 04/24/03, 04/29/03; SMS 7/22/03, 10/23/03; LMH 4/5/04, 10/24/04; JSN 4/13/05; LMH 9/30/05; TLR 04/10/06

Table E-2 (Continued)
DRO, VOC, and PVOC Concentrations in Groundwater at Monitoring Well Locations

Sample	Date	Lab Notes	DRO (mg/l)	Benzene	Ethylbenzene	Toluene	Xylenes	TMBs	MTBE	Other VOCs
MW2 (cont.)	3/25/03	--	NA	<0.31	<0.5	<0.3	<0.92	<0.41	<0.3	NA
	6/10/03	--	NA	<0.31	<0.5	<0.3	<0.92	<0.71	<0.3	NA
	3/9/04	--	NA	<0.31	<0.5	<0.3	<0.92	<0.71	<0.3	NA
	3/9/05	--	NA	<0.500	<5.00	<5.00	<5.00	<10.00	<0.276	NA
	3/21/2006	--	NA	<0.25	<0.22	<0.11	<0.39	<0.44	<0.23	NA
MW3	8/31/99	--	0.46	<0.13	<0.22	<0.20	<0.23	<0.51	<0.16	NA
	9/6/01	--	NA	<0.13	<0.22	<0.20	<0.23	<0.51	<0.16	NA
	12/20/01	--	NA	<0.13	<0.22	<0.20	<0.23	<0.51	<0.16	NA
	4/24/02	--	NA	<0.13	<0.22	<0.20	<0.23	0.22	<0.16	NA
	7/23/02	--	NA	<0.31	<0.5	<0.3	<0.92	<0.71	<0.3	NA
	9/23/02	--	NA	<0.31	<0.5	<0.3	<0.92	<0.71	<0.3	NA
	12/19/02	--	NA	<0.31	<0.5	<0.3	<0.92	<0.71	<0.3	NA
	3/24/03	--	NA	<0.31	<0.5	<0.3	<0.92	<0.71	<0.3	NA
	6/9/03	--	NA	<0.31	<0.5	<0.3	<0.92	<0.71	<0.3	NA
	3/9/04	--	NA	<0.31	<0.5	<0.3	<0.92	<0.71	<0.3	NA
	3/8/05	(15)	NA	<0.500	<5.00	<5.00	<5.00	<10.00	<0.276	NA
	3/21/2006	1	NA	<1.0	<0.88	<0.44	<1.6	<1.76	<0.92	NA
MW4	8/31/99	--	2.4	<0.13	<0.22	<0.20	<0.23	<0.51	<0.16	NA
	9/6/01	(2)	NA	<0.13	<0.22	<0.20	<0.23	<0.51	<0.16	NA

Table E-2 (Continued)
DRO, VOC, and PVOC Concentrations in Groundwater at Monitoring Well Locations

Sample	Date	Lab Notes	DRO (mg/l)	Benzene	Ethylbenzene	Toluene	Xylenes	TMBs	MTBE	Other VOCs
MW4 (cont.)	12/20/01	--	NA	<0.13	<0.22	<0.20	0.54	<0.51	<0.16	NA
	4/24/02	(2)	NA	<0.13	<0.22	<0.20	<0.23	<0.51	<0.16	NA
	7/24/02	--	NA	<0.31	<0.5	<0.3	<0.92	<0.71	<0.3	NA
	9/25/02	(3)	NA	<0.31	<0.5	<0.3	<0.92	<0.71	<0.3	NA
	12/20/02	--	NA	<0.31	<0.5	<0.3	<0.92	<0.71	<0.3	NA
	3/26/03	--	NA	<0.31	<0.5	<0.3	<0.92	<0.71	<0.3	NA
	6/10/03	--	NA	<0.31	<0.5	<0.3	<0.92	<0.71	<0.3	NA
	9/16/03	--	NA	<0.31	<0.5	<0.3	<0.92	<0.71	<0.3	NA
	3/10/04	--	NA	<0.31	<0.5	<0.3	<0.92	<0.71	<0.3	NA
	9/30/04	--	NA	<0.500	<5.00	<5.00	<5.00	<10.00	<0.511	NA
	3/9/05	--	NA	<0.500	<5.00	<5.00	<5.00	<10.00	<0.276	NA
	3/21/06	(1)	NA	<1.0	<0.88	<0.44	<1.6	<1.76	<0.92	NA
MW5	8/31/99	(2)	94	3.6	44	<0.20	85	201	<0.16	NA
	9/7/01	(4)	NA	**210**	**5,200**	<200	**14,000**	**63,000**	<160	NA
	9/7/01 Dup	(4)	NA	<130	**12,000**	250	**22,000**	**76,000**	<160	NA
	12/21/01	(2)	NA	**13**	77	7.6	170	169	<3.2	NA
	4/25/02	(2)	NA	**18**	92	7.5	230	217	<0.80	NA
	4/25/02 Dup	(2)	NA	**17**	91	7.4	230	218	<0.80	NA

Table E-2 (Continued)
DRO, VOC, and PVOC Concentrations in Groundwater at Monitoring Well Locations

Sample	Date	Lab Notes	DRO (mg/l)	Benzene	Ethylbenzene	Toluene	Xylenes	TMBs	MTBE	Other VOCs
MW5 (Cont.)	7/24/02	--	NA	**14**	78.8	2.40	217.8	215.9	<1.50	NA
	7/24/02 Dup	--	NA	**13.8**	78.2	2.35	217.7	216.2	<1.50	NA
	9/25/02	(3)	NA	**10.6**	49.3	<6.00	153.8	167.2	<6.00	NA
	9/25/02 Dup	(3)	NA	**10.3**	47.4	<6.00	149.3	157.1	<6.00	NA
	12/21/02	--	NA	**9.45**	43.7	<6.00	143.2	156.1	<6.00	NA
	12/21/02 Dup	--	NA	**10**	46.6	<3.00	161.6	174.2	<3.00	NA
	3/25/03	--	NA	**14.3**	76.6	2.40	216.2	242.2	<1.50	NA
	3/25/03 Dup	--	NA	**13.3**	71.2	2.25	203.7	232.1	<1.50	NA
	6/10/03	--	NA	**17.8**	106	3.98	249.7	263.9	<1.50	NA
	6/10/03 Dup	--	NA	**19**	112	4.26	262.8	276.2	<1.50	NA
	9/16/03	--	NA	**13.4**	89	2.58	196	217.7	<1.50	NA
	9/16/03 Dup	--	NA	**14.6**	97	2.71	211.6	231.1	<1.50	NA
	3/10/04	--	NA	**9.39**	139	3.08	278.8	291.8	<1.50	NA
	3/10/04 Dup	--	NA	**9.47**	142	3.12	284.6	304.2	<1.50	NA
	9/30/04	--	NA	**17.5**	114	<25.0	270	287.6	<2.56	NA
	9/30/04 Dup	--	NA	**16.9**	113	<25.0	269	291.3	<2.56	NA
	3/9/05	--	NA	**12.4**	106	<25.0	217	241.8	<1.38	NA
	3/9/05 Dup	--	NA	**13.4**	91.1	<25.0	191	185.1	<1.38	NA
	9/9/05	--	NA	**16**	85	1.5	180	184	<1.0	NA

Table E-2 (Continued)
DRO, VOC, and PVOC Concentrations in Groundwater at Monitoring Well Locations

Sample	Date	Lab Notes	DRO (mg/l)	Benzene	Ethylbenzene	Toluene	Xylenes	TMBs	MTBE	Other VOCs
MW5 (Cont.)	03/21/2006	--	NA	**18**	110	4.2	210	218	<0.46	NA
MW6	8/31/99	--	0.79	3.4	5.7	<0.20	7.8	1.7	<0.16	NA
	9/6/01	(5)	NA	2.5	0.65	<0.20	1.4	<0.51	<0.16	NA
	12/21/01	(5)	NA	<0.13	<0.22	<0.20	<0.23	<0.51	<0.16	NA
	4/25/02	--	NA	<0.13	<0.22	<0.20	<0.23	<0.51	<0.16	NA
	7/23/02	--	NA	<0.31	<0.5	<0.3	<0.92	<0.71	<0.3	NA
	9/24/02	--	NA	<0.31	<0.5	<0.3	<0.92	<0.71	<0.3	NA
	12/20/02	--	NA	<0.31	<0.5	<0.3	<0.92	<0.71	<0.3	NA
	3/25/03	--	NA	<0.31	<0.5	<0.3	<0.92	<0.71	<0.3	NA
	6/10/03	--	NA	2.73	<0.5	<0.3	<0.92	<0.71	<0.3	NA
	9/15/03	--	NA	<0.31	<0.5	<0.3	<0.92	<0.71	<0.3	NA
	3/9/04	--	NA	<0.31	<0.5	<0.3	<0.92	<0.71	<0.3	NA
	9/29/04	--	NA	<0.500	<5.00	<5.00	<5.00	<10.00	<0.511	NA
	3/9/05	--	NA	<0.500	<5.00	<5.00	<5.00	<10.00	<0.276	NA
	3/21/06	--	NA	<0.25	<0.22	<0.11	<0.39	<0.44	<0.23	NA
MW7	8/31/99	(6)	<0.10	<0.13	<0.22	<0.20	<0.23	<0.51	<4.7	NA
	9/6/01	--	NA	0.22	<0.22	<0.20	<0.23	<0.51	<0.16	NA
	12/20/01	--	NA	0.21	<0.22	<0.20	<0.23	<0.51	2.4	NA
	4/25/02	(5)	NA	0.20	<0.22	<0.20	<0.23	<0.51	<0.16	NA

Table E-2 (Continued)
DRO, VOC, and PVOC Concentrations in Groundwater at Monitoring Well Locations

Sample	Date	Lab Notes	DRO (mg/l)	Benzene	Ethylbenzene	Toluene	Xylenes	TMBs	MTBE	Other VOCs
MW7 (cont.)	7/23/02	--	NA	<0.31	<0.5	<0.3	<0.92	<0.71	<0.3	NA
	9/24/02	--	NA	<0.31	<0.5	<0.3	<0.92	<0.71	<0.3	NA
	12/20/02	--	NA	<0.31	<0.5	<0.3	<0.92	<0.71	<0.3	NA
	3/25/03	--	NA	<0.31	<0.5	<0.3	<0.92	<0.71	<0.3	NA
	6/10/03	--	NA	<0.31	<0.5	<0.3	<0.92	<0.71	<0.3	NA
	3/9/04	--	NA	<0.31	<0.5	<0.3	<0.92	<0.71	<0.3	NA
	3/9/05	--	NA	<0.500	<5.00	<5.00	<5.00	<10.0	1.50	NA
	3/21/06	(1)	NA	<1.0	<0.88	<0.44	<1.6	<1.76	<0.92	NA
MW10	9/6/01	(7)	NA	<0.10	<0.25	<0.10	<0.25	<0.20	<0.25	Methylene chloride 1.5
	12/20/01	--	NA	<0.13	<0.22	<0.20	<0.23	<0.51	<0.16	NA
	4/23/02	--	NA	<0.13	<0.22	<0.20	<0.23	<0.51	<0.16	NA
	7/22/02	--	NA	<0.31	<0.5	<0.3	<0.92	<0.71	<0.3	NA
	9/23/02	--	NA	<0.31	<0.5	<0.3	<0.92	<0.71	<0.3	NA
	12/19/02	--	NA	<0.31	<0.5	<0.3	<0.92	<0.71	<0.3	NA
	3/24/03	--	NA	<0.31	<0.5	<0.3	<0.92	<0.71	<0.3	NA
	6/9/03	--	NA	<0.31	<0.5	<0.3	<0.92	<0.71	<0.3	NA
	3/9/04	--	NA	<0.31	<0.5	<0.3	<0.92	<0.71	<0.3	NA

Table E-2 (Continued)
DRO, VOC, and PVOC Concentrations in Groundwater at Monitoring Well Locations

Sample	Date	Lab Notes	DRO (mg/l)	Benzene	Ethylbenzene	Toluene	Xylenes	TMBs	MTBE	Other VOCs
MW10 (Cont.)	3/8/05	(15)	NA	<0.500	<5.00	<5.00	<5.00	<10.00	<0.276	NA
	03/20/2006	--	NA	<0.25	<0.22	<0.11	<0.39	<0.44	<0.23	NA
MW11	9/6/01	(6)	NA	<0.10	<0.25	<0.10	<0.25	<0.20	<0.25	Methylene chloride 1.5
	12/20/01	--	NA	<0.13	<0.22	<0.20	<0.23	<0.51	<0.16	NA
	4/23/02	--	NA	<0.13	<0.22	<0.20	<0.23	<0.51	<0.16	NA
	7/23/02	--	NA	<0.31	<0.5	<0.3	<0.92	<0.71	<0.3	NA
	9/23/02	--	NA	<0.31	<0.5	<0.3	<0.92	<0.71	<0.3	NA
	12/19/02	--	NA	<0.31	<0.5	<0.3	<0.92	<0.71	<0.3	NA
	3/24/03	--	NA	<0.31	<0.5	<0.3	<0.92	<0.71	<0.3	NA
	6/9/03	--	NA	<0.31	<0.5	<0.3	<0.92	<0.71	<0.3	NA
	9/15/03	--	NA	<0.31	<0.5	<0.3	<0.92	<0.71	<0.3	NA
	3/9/04	--	NA	<0.31	<0.5	<0.3	<0.92	<0.71	<0.3	NA
	9/29/04	--	NA	<0.500	<5.00	<5.00	<5.00	<10.00	<0.511	NA
	3/9/05	--	NA	<0.500	<5.00	<5.00	<5.00	<10.00	<0.276	NA
	03/20/2006	--	NA	<0.25	<0.22	<0.11	<0.39	<0.44	<0.23	NA
MW12	9/7/01	(6)	NA	0.18	<0.25	0.14	0.54	0.99	<0.25	sec-Butylbenzene 4.0 Isopropylbenzene 2.2 p-Isopropyltoluene 0.79 Methylene chloride 0.80 Naphthalene 0.75 n-Propylbenzene 2.0
	12/21/01	(2)	NA	0.24	<0.22	0.30	0.80	0.58	<0.16	NA

Table E-2 (Continued)
DRO, VOC, and PVOC Concentrations in Groundwater at Monitoring Well Locations

Sample	Date	Lab Notes	DRO (mg/l)	Benzene	Ethylbenzene	Toluene	Xylenes	TMBs	MTBE	Other VOCs
MW12 (Cont.)	4/25/02	(5)	NA	0.20	<0.22	0.25	0.57	0.88	<0.16	NA
	7/24/02	--	NA	<0.31	<0.5	<0.3	<0.92	<0.71	<0.3	NA
	9/24/02	(10)	NA	0.505	<0.5	<0.3	<0.92	<0.71	<0.3	NA
	12/20/02	(8)	NA	<0.31	<0.5	<0.3	<0.92	0.453	<0.3	NA
	3/25/03	--	NA	<0.31	<0.5	<0.3	<0.92	<0.71	<0.3	NA
	6/10/03	--	NA	<0.31	<0.5	<0.3	<0.92	<0.71	<0.3	NA
	9/16/03	(9)	NA	<0.31	<0.5	<0.3	0.328	0.482	<0.3	NA
	3/10/04	--	NA	<0.31	<0.5	<0.3	<0.92	<0.71	<0.3	NA
	9/30/04	--	NA	<0.500	<5.00	<5.00	<5.00	<10.00	<0.511	NA
	3/9/05	--	NA	<0.500	<5.00	<5.00	<5.00	<10.00	<0.276	NA
	9/9/05	--	NA	<0.20	<0.50	<0.20	<0.50	0.37	<0.50	NA
	03/21/2006	(1)	NA	<1.0	<0.88	<0.44	<1.6	<1.76	<0.92	NA
	3/21/2006 Dup	(1)	NA	<1.0	<0.88	<0.44	<1.6	<1.76	<0.92	NA
MW13	9/6/01	(6)	NA	1.9	<0.25	<0.10	<0.25	11	<0.25	sec-Butylbenzene 9.5 Isopropylbenzene 4.4 Methylene chloride 0.85 Naphthalene 0.29 n-Propylbenzene 0.73
	12/21/01	(10)	NA	2.1	<0.22	0.27	0.24	0.37	<0.16	NA
	4/25/02	(2)	NA	1.4	<0.22	0.21	<0.23	0.29	<0.16	NA
	7/23/02	(11)	NA	0.503	<0.5	<0.3	<0.92	<0.71	<0.3	NA

Table E-2 (Continued)
DRO, VOC, and PVOC Concentrations in Groundwater at Monitoring Well Locations

Sample	Date	Lab Notes	DRO (mg/l)	Benzene	Ethylbenzene	Toluene	Xylenes	TMBs	MTBE	Other VOCs
MW13 (Cont.)	9/24/02	--	NA	<0.31	<0.5	<0.3	<0.92	<0.71	<0.3	NA
	12/20/02	(11)	NA	0.706	<0.5	<0.3	<0.92	<0.71	<0.3	NA
	3/25/03	(11)	NA	0.456	<0.5	<0.3	<0.92	<0.71	<0.3	NA
	6/10/03	(11)	NA	0.865	<0.5	<0.3	<0.92	<0.71	<0.3	NA
	9/16/03	(11)	NA	0.421	<0.5	<0.3	<0.92	<0.71	<0.3	NA
	3/10/04	--	NA	1.49	<0.5	<0.3	<0.92	<0.71	<0.3	NA
	9/29/04	--	NA	<0.500	<5.00	<5.00	<5.00	<10.00	<0.511	NA
	3/9/05	--	NA	<0.500	<5.00	<5.00	<5.00	<10.00	<0.276	NA
	3/21/2006	--	NA	<0.25	<0.22	<0.11	<0.39	<0.44	<0.23	NA
MW14	9/7/01	(6)	NA	<0.40	33	<0.40	6.6	54	<1.0	sec-Butylbenzene 36 Isopropylbenzene 25 p-Isopropyltoluene 11 Methylene chloride 1.8 Naphthalene **81** n-Propylbenzene 38
	12/21/01	(2)	NA	0.78	7.6	<0.40	0.60	2.6	<0.32	NA
	12/21/01 Dup	(2)	NA	0.76	7.4	<0.40	0.56	2.3	<0.32	NA
	4/25/02	(2)	NA	0.44	0.84	<0.40	<0.46	<1.02	<0.32	NA
	7/24/02	(12)	NA	0.459	5.20	<0.3	<0.92	1.67	<0.3	NA
	9/24/02	(13)	NA	1.06	13.9	<0.3	0.363	0.642	<0.3	NA
	12/21/02	--	NA	1.11	3.66	<0.3	<0.92	<0.71	<0.3	NA
	3/25/03	--	NA	1.15	10.8	<0.3	<0.92	<0.71	<0.3	NA

Table E-2 (Continued)
DRO, VOC, and PVOC Concentrations in Groundwater at Monitoring Well Locations

Sample	Date	Lab Notes	DRO (mg/l)	Benzene	Ethylbenzene	Toluene	Xylenes	TMBs	MTBE	Other VOCs
MW14 (Cont.)	6/10/03	(11)	NA	0.345	<0.5	<0.3	<0.92	<0.71	<0.3	NA
	9/16/03	--	NA	<0.31	<0.5	<0.3	<0.92	<0.71	<0.3	NA
	3/10/04	--	NA	<0.31	<0.5	<0.3	<0.92	<0.71	<0.3	NA
	9/30/04	--	NA	<0.500	<5.00	<5.00	<5.00	<10.00	<0.511	NA
	3/9/05	--	NA	<0.500	<5.00	<5.00	<5.00	<10.00	<0.276	NA
	3/21/2006	--	NA	<0.25	<0.22	<0.11	<0.39	<0.44	<0.23	NA
MW15	9/6/01	(6)	NA	<0.10	<0.25	<0.10	<0.25	<0.20	<0.25	Methylene chloride 1.2
	12/21/01	--	NA	<0.13	<0.22	<0.20	<0.23	<0.51	<0.16	NA
	4/23/02	--	NA	<0.13	<0.22	<0.20	<0.23	<0.51	<0.16	NA
	7/22/02	--	NA	<0.31	<0.5	<0.3	<0.92	<0.71	<0.3	NA
	9/23/02	--	NA	<0.31	<0.5	<0.3	<0.92	<0.71	<0.3	NA
	12/18/02	--	NA	<0.31	<0.5	<0.3	<0.92	<0.71	<0.3	NA
	3/24/03	--	NA	<0.31	<0.5	<0.3	<0.92	<0.71	<0.3	NA
	6/9/03	--	NA	<0.31	<0.5	<0.3	<0.92	<0.71	<0.3	NA
	9/15/03	--	NA	<0.31	<0.5	<0.3	<0.92	<0.71	<0.3	NA
	3/8/04	--	NA	<0.31	<0.5	<0.3	<0.92	<0.71	<0.3	NA
	9/29/04	--	NA	<0.500	<5.00	<5.00	<5.00	<10.00	<0.511	NA
	3/8/05	(15)	NA	<0.500	<5.00	<5.00	<5.00	<10.00	<0.276	NA
	03/20/2006	--	NA	<0.25	<0.22	<0.11	<0.39	<0.44	<0.23	NA

Table E-2 (Continued)
DRO, VOC, and PVOC Concentrations in Groundwater at Monitoring Well Locations

Sample	Date	Lab Notes	DRO (mg/l)	Benzene	Ethylbenzene	Toluene	Xylenes	TMBs	MTBE	Other VOCs
MW16	9/6/01	(6)	NA	<0.10	<0.25	<0.10	<0.25	<0.20	<0.25	1,1-Dichloroethane 3.0 cis-1,2-Dichloroethene 4.2 Methylene chloride 0.83 Trichloroethene 2.0
	12/21/01	--	NA	<0.13	<0.22	<0.20	<0.23	<0.51	<0.16	NA
	4/23/02	--	NA	<0.13	<0.22	<0.20	<0.23	<0.51	<0.16	NA
	7/22/02	--	NA	<0.31	<0.5	<0.3	<0.92	<0.71	<0.3	NA
	9/23/02	--	NA	<0.31	<0.5	<0.3	<0.92	<0.71	<0.3	NA
	12/19/02	--	NA	<0.31	<0.5	<0.3	<0.92	<0.71	<0.3	NA
	3/24/03	--	NA	<0.31	<0.5	<0.3	<0.92	<0.71	<0.3	NA
	6/9/03	--	NA	<0.31	<0.5	<0.3	<0.92	<0.71	<0.3	NA
	3/9/04	--	NA	<0.31	<0.5	<0.3	<0.92	<0.71	<0.3	NA
	3/8/05	(15)	NA	<0.500	<5.00	<5.00	<5.00	<10.00	<0.276	NA
	03/20/2006	--	NA	<0.25	<0.22	<0.11	<0.39	<0.44	<0.23	NA
Field Blank	8/31/99	--	NA	<0.13	<0.22	0.35	0.24	<0.51	<0.16	NA
	9/7/01	(6)	NA	0.87	<0.25	1.3	0.87	0.21	<0.25	Methylene chloride 0.68 Naphthalene 0.34
	12/21/01	--	NA	0.13	<0.22	0.49	0.29	<0.51	<0.16	NA
	4/23/02	--	NA	<0.13	<0.22	<0.20	<0.23	<0.51	<0.16	NA
	4/25/02	--	NA	<0.13	<0.22	<0.20	<0.23	<0.51	<0.16	NA
	9/25/02	(3)	NA	<0.31	<0.5	<0.3	<0.92	<0.71	<0.3	NA
	12/21/02	--	NA	<0.31	<0.5	<0.3	<0.92	<0.71	<0.3	NA

Table E-2 (Continued)
DRO, VOC, and PVOC Concentrations in Groundwater at Monitoring Well Locations

Sample	Date	Lab Notes	DRO (mg/l)	Benzene	Ethylbenzene	Toluene	Xylenes	TMBs	MTBE	Other VOCs
Field Blank (Cont.)	6/10/03	--	NA	<0.31	<0.5	<0.3	<0.92	<0.71	<0.3	NA
	9/16/03	--	NA	<0.31	<0.5	<0.3	<0.92	<0.71	<0.3	NA
	3/10/04	--	NA	<0.31	<0.5	<0.3	<0.92	<0.71	<0.3	NA
	9/30/04	--	NA	<0.500	<5.00	<5.00	<5.00	<10.00	<0.511	NA
	03/20/06	--	NA	<0.25	<0.22	0.58	<0.39	<0.44	<0.23	NA
Trip Blank	8/31/99	--	NA	<0.13	<0.22	<0.20	<0.23	<0.51	<0.16	NA
	9/6/01	(6)	NA	<0.10	<0.25	<0.10	<0.25	<0.20	<0.25	Methylene chloride 0.88
	9/7/01	(6)	NA	<0.10	<0.25	0.17	<0.25	<0.20	<0.25	Methylene chloride 0.43
	12/20/01	--	NA	<0.13	<0.22	<0.20	<0.23	<0.51	<0.16	NA
	12/21/01	--	NA	<0.13	<0.22	<0.20	<0.23	<0.51	<0.16	NA
	4/23/02	--	NA	<0.13	<0.22	<0.20	<0.23	<0.51	<0.16	NA
	7/22/02	--	NA	<0.31	<0.5	<0.3	<0.92	<0.71	<0.3	NA
	7/23/02	--	NA	<0.31	<0.5	<0.3	<0.92	<0.71	<0.3	NA
	7/24/02	--	NA	<0.31	<0.5	<0.3	<0.92	<0.71	<0.3	NA
	9/23/02	(14)	NA	<0.31	<0.5	0.354	<0.92	<0.71	<0.3	NA
	9/24/02	(14)	NA	<0.31	<0.5	<0.3	<0.92	<0.71	<0.3	NA
	9/25/02	--	NA	<0.31	<0.5	0.468	<0.92	<0.71	<0.3	NA
	12/18/02	--	NA	<0.31	<0.5	<0.3	<0.92	<0.71	<0.3	NA
	12/19/02	--	NA	<0.31	<0.5	<0.3	<0.92	<0.71	<0.3	NA

Table E-2 (Continued)
DRO, VOC, and PVOC Concentrations in Groundwater at Monitoring Well Locations

Sample	Date	Lab Notes	DRO (mg/l)	Benzene	Ethylbenzene	Toluene	Xylenes	TMBs	MTBE	Other VOCs
Trip Blank (Cont.)	12/20/02	--	NA	<0.31	<0.5	<0.3	<0.92	<0.71	<0.3	NA
	12/21/02	--	NA	<0.31	<0.5	<0.3	<0.92	<0.71	<0.3	NA
	3/24/03	--	NA	<0.31	<0.5	<0.3	<0.92	<0.71	<0.3	NA
	3/25/03	--	NA	<0.31	<0.5	<0.3	<0.92	<0.71	<0.3	NA
	6/9/03	--	NA	<0.31	<0.5	<0.3	<0.92	<0.71	<0.3	NA
	6/10/03	--	NA	<0.31	<0.5	<0.3	<0.92	<0.71	<0.3	NA
	9/15/03	--	NA	<0.31	<0.5	<0.3	<0.92	<0.71	<0.3	NA
	3/9/04	--	NA	<0.31	<0.5	<0.3	<0.92	<0.71	<0.3	NA
	3/10/04	--	NA	<0.31	<0.5	<0.3	<0.92	<0.71	<0.3	NA
	9/29/04	--	NA	<0.500	<5.00	<5.00	<5.00	<10.00	<0.511	NA
	9/30/04	--	NA	<0.500	<5.00	<5.00	<5.00	<10.00	<0.511	NA
	3/8/05	(15)	NA	<0.500	<5.00	<5.00	<5.00	<10.00	<0.276	NA
	3/9/05	--	NA	<0.500	<5.00	<5.00	<5.00	<10.00	<0.276	NA
	9/9/05	--	NA	<0.20	<0.50	<0.20	<0.50	<0.40	<0.50	NA
	03/20/06	--	NA	<0.25	<0.22	<0.11	<0.39	<0.44	<0.23	NA

Table E-2 (Continued)
DRO, VOC, and PVOC Concentrations in Groundwater at Monitoring Well Locations

Sample	Date	Lab Notes	DRO (mg/l)	Benzene	Ethylbenzene	Toluene	Xylenes	TMBs	MTBE	Other VOCs	
NR 140 Enforcement Standards			NE	5	700	1,000	10,000	480	60	1,1-Dichloroethane	850
										cis-1,2 Dichloroethane	70
										Methylene chloride	5
										Naphthalene	40
										Trichloroethene	5
NR 140 Preventive Action Limits			NE	0.5	140	200	1,000	96	12	1,1-Dichloroethane	85
										cis-1,2 Dichloroethane	7
										Methylene chloride	0.5
										Naphthalene	8
										Trichloroethene	0.5

ABBREVIATIONS:
DRO = Diesel Range Organics
VOCs = Volatile Organic Compounds
PVOC = Petroleum Volatile Organic Compounds
TMB = 1,2,4- and 1,3,5-Trimethylbenzene
AST = Aboveground Storage Tank
NE = No Standard Established
MTBE = Methyl-tert-butyl ether
NA = Not Analyzed

NOTES:
Bold values exceed NR 140 enforcement standards.

LABORATORY NOTES:
(1) PVOCs analyses - SOAPY
(2) PVOCs analysis – Late eluting hydrocarbons present.
(3) 1,2,4- and 1,3,5 TMB analyses – Result of duplicate analysis exceeds the limits for precision.
(4) PVOCs analysis – Late eluting hydrocarbons present. Methylene chloride – Common lab solvent and contaminant.
(5) PVOCs analysis – Unidentified compound(s) present.
(6) MTBE analysis – Matrix interference.
(7) Methylene chloride – Common lab solvent and contaminant.
(8) 1,2,4 TMB analysis - Estimated concentration below laboratory quantitation level.
(9) 1,2,4-TMB & o-Xylene – Estimated concentration below laboratory quantitation level.
(10) PVOCs analysis – Late eluting hydrocarbons present and unidentified compound(s) present.
(11) Benzene analysis - Estimated concentration below laboratory quantitation level.
(12) Benzene, 1,2,4 TMB, and 1,3,5 TMB analyses – Estimated concentration below laboratory quantitation level.
(13) 1,2,4-TMB and o-Xylene analyses – Estimated concentration below laboratory quantitation level.
(14) Toluene analyses – Estimated concentration below laboratory quantitation level.
(15) PVOCs analyses – The result for one or more quality measurements associated with the sample did not meet the laboratory and/or source method acceptance criteria.

Table E-2 (Continued)
DRO, VOC, and PVOC Concentrations in Groundwater at Monitoring Well Locations

COMMENTS ON SAMPLING METHODS:
Samples collected on August 31, 1999 (MW2 – MW7) were collected using a bailer, following well purging at low flow with a peristaltic pump.
Samples collected on September 6 and December 21, 2001 (MW1 – MW7 and MW10 – MW16) were collected using a bailer, following well purging with a bailer.
Samples collected in April, July, and September 2002 (MW1 – MW7 and MW10 – MW16) were collected using a peristaltic pump at low flow, following purging with a peristaltic pump at low flow.

By: LH; JSP
Checked: JM
Date: 03/13/02; 8/27/02; 11/27/02; 1/10/03; 4/24/03; 7/25/03; 10/24/03; 4/24/04; 5/4/04; 10/24/05; 4/13/05; 9/30/05; 4/11/06

Table E-3
PAH Concentrations in Groundwater
Hartmeyer AST Area / Project #1624
(Results in µg/l)

Compound	MW1		MW2							NR 140 enforcement standard (ES)	NR 140 preventive action limit (PAL)
	9/6/2001	3/20/2006	8/31/1999	9/6/2001	9/24/2002	12/19/2002	3/25/2003	6/10/2003	3/9/2004		
Acenaphthene	<0.40	<0.34	<0.22	<0.40	<0.06	<0.06	<0.06	<0.06	<5.00	--	--
Acenaphthylene	<0.64	<0.70	<0.56	<0.64	<0.06	<0.06	<0.06	<0.06	<5.00	--	--
Anthracene	<0.030	<0.039	0.023	<0.030	<0.05	<0.05	<0.05	<0.05	<5.00	3,000	600
Benzo(a)anthracene	<0.033	<0.045	<0.017	<0.033	<0.04	<0.04	<0.04	<0.04	<0.100	--	--
Benzo(b)fluoranthene	<0.056	<0.10	<0.043	<0.056	<0.04	<0.04	<0.04	<0.04	0.0239	0.2	0.02
Benzo(k)fluoranthene	<0.050	<0.050	<0.029	<0.050	<0.04	<0.04	<0.04	<0.04	<0.100	--	--
Benzo(a)pyrene	<0.023	<0.033	<0.027	<0.023	<0.017	<0.017	<0.017	<0.017	0.0225	0.2	0.02
Benzo(g,h,i)perylene	<0.11	<0.12	<0.10	<0.11	<0.05	<0.05	<0.05	<0.05	<5.00	--	--
Chrysene	<0.029	<0.042	<0.013	<0.029	<0.05	<0.05	<0.05	<0.05	0.024	0.2	0.02
Dibenzo(a,h)anthracene	<0.050	<0.13	<0.16	<0.050	<0.06	<0.06	<0.06	<0.06	<0.100	--	--
Fluoranthene	<0.077	<0.083	0.68	<0.077	<0.06	<0.06	<0.06	<0.06	<5.00	400	80
Fluorene	<0.078	<0.063	0.21	<0.078	<0.12	<0.12	<0.12	<0.12	<5.00	400	80
Indeno(1,2,3-cd)pyrene	<0.039	<0.063	<0.084	<0.039	<0.05	<0.05	<0.05	<0.05	<0.200	--	--
1-Methylnaphthalene	<0.51	<0.33	<0.40	<0.51	<0.08	<0.08	<0.08	0.16	<5.00	--	--
2-Methylnaphthalene	<0.96	<0.32	<0.61	<0.96	<0.11	<0.11	<0.11	0.18	<5.00	--	--
Naphthalene	<0.38	<0.41	6.8	<0.38	<0.1	<0.1	<0.1	<0.1	<5.00	40	8
Phenanthrene	<0.078	<0.031	0.85	<0.078	<0.08	<0.08	<0.08	0.28	<5.00	--	--
Pyrene	<0.061	<0.045	0.16	<0.061	<0.09	<0.09	<0.09	<0.09	<5.00	250	50
Lab Note Number	--	--	--	--	(1)	(13)	--	--	(29)	--	--

Rev. JSP 8/28/02; TLR 11/25/02; JSP 12/27/02; JSP 1/10/03; TLR 01/24/03; JSP 4/24/03; LMH 4/24/03; SMS 7/22/03; LMH 4/5/04; LMH 10/25/04; LMH 9/30/05; TLR 04/11/06

Table E-3
PAH Concentrations in Groundwater
Hartmeyer AST Area / Project #1624
(Results in µg/l)

Compound	MW2 (Cont.)		MW3			MW4				NR 140 enforcement standard (ES)	NR 140 preventive action limit (PAL)
	3/9/2005	3/21/2006	8/31/1999	9/6/2001	3/21/2006	8/31/1999	9/6/2001	4/25/2002	7/24/2002		
Acenaphthene	<5.00	<0.34	<0.22	<0.40	<0.34	<0.22	<0.40	<0.57	0.32	--	--
Acenaphthylene	<5.00	<0.71	<0.56	<0.64	<0.71	<0.56	<0.65	<0.26	<0.16	--	--
Anthracene	<5.00	<0.039	<0.018	<0.030	<0.039	0.12	0.05	0.12	<0.024	3,000	600
Benzo(a)anthracene	<0.100	<0.045	<0.017	<0.033	<0.045	<0.017	0.19	<0.17	<0.03	--	--
Benzo(b)fluoranthene	0.0239	<0.10	<0.043	<0.056	<0.10	<0.043	<0.057	<0.052	<0.036	0.2	0.02
Benzo(k)fluoranthene	<0.100	<0.051	<0.029	<0.050	<0.051	<0.029	<0.050	<0.032	<0.067	--	--
Benzo(a)pyrene	0.0225	<0.033	<0.027	<0.023	<0.033	0.069	<0.023	<0.017	<0.022	0.2	0.02
Benzo(g,h,i)perylene	<5.00	<0.12	<0.10	<0.11	<0.12	<0.10	<0.11	<0.20	<0.087	--	--
Chrysene	0.0240	<0.042	<0.013	<0.029	<0.042	<0.013	<0.029	<0.041	<0.022	0.2	0.02
Dibenzo(a,h)anthracene	<0.100	<0.13	<0.16	<0.050	<0.13	<0.16	<0.050	<0.097	<0.036	--	--
Fluoranthene	<5.00	<0.084	<0.10	<0.077	<0.084	<0.10	0.15	0.46	<0.053	400	80
Fluorene	<5.00	<0.064	<0.029	<0.078	<0.064	0.69	0.36	0.42	<0.025	400	80
Indeno(1,2,3-cd)pyrene	<0.200	<0.064	<0.084	<0.039	<0.064	<0.084	<0.039	<0.039	<0.03	--	--
1-Methylnaphthalene	<5.00	<0.33	<0.40	<0.51	<0.33	<0.40	<0.52	<0.66	0.36	--	--
2-Methylnaphthalene	<5.00	<0.32	<0.61	<0.96	<0.32	<0.61	<0.97	<0.63	0.5	--	--
Naphthalene	<5.00	<0.41	<0.22	<0.38	<0.41	<0.22	<0.38	<0.74	0.62	40	8
Phenanthrene	<5.00	<0.031	<0.014	<0.078	<0.031	0.2	0.18	0.078	<0.036	--	--
Pyrene	<5.00	<0.045	<0.047	<0.061	<0.045	<0.047	0.11	0.2	<0.13	250	50
Lab Note Number	(29)	--	--	--	--	(2)	--	--	--	--	--

Rev. JSP 8/28/02; TLR 11/25/02; JSP 12/27/02; JSP 1/10/03; TLR 01/24/03; JSP 4/24/03; LMH 4/24/03; SMS 7/22/03; LMH 4/5/04; LMH 10/25/04; LMH 9/30/05; TLR 04/11/06

Table E-3
PAH Concentrations in Groundwater
Hartmeyer AST Area / Project #1624
(Results in µg/l)

Compound	MW4 (Cont.)									NR 140 enforcement standard (ES)	NR 140 preventive action limit (PAL)
	9/25/2002	12/20/2002	3/26/2003	6/10/2003	9/16/2003	3/10/2004	9/30/2004	3/9/2005	3/21/2006		
Acenaphthene	<0.06	<0.06	<0.06	0.16	<0.06	0.22	<5.00	<5.00	<0.34	--	--
Acenaphthylene	<0.06	<0.06	0.33	<0.06	<0.06	<0.06	<5.00	<5.00	<0.70	--	--
Anthracene	<0.05	<0.05	0.22	0.07	0.055	<0.05	<5.00	<5.00	<0.039	3,000	600
Benzo(a)anthracene	<0.04	<0.04	0.26	<0.04	<0.04	<0.04	<0.100	<0.100	<0.045	--	--
Benzo(b)fluoranthene	<0.04	<0.04	0.13	<0.04	<0.04	<0.04	<0.0200	0.0211	<0.10	0.2	0.02
Benzo(k)fluoranthene	<0.04	<0.04	0.08	<0.04	<0.04	<0.04	<0.100	<0.100	<0.050	--	--
Benzo(a)pyrene	<0.017	<0.017	0.171	<0.017	<0.017	<0.017	<0.0200	<0.0200	<0.033	0.2	0.02
Benzo(g,h,i)perylene	<0.05	<0.05	<0.05	<0.05	<0.05	<0.05	<5.00	<5.00	<0.12	--	--
Chrysene	<0.05	<0.05	0.15	<0.05	<0.05	<0.05	<0.0200	<0.0200	<0.042	0.2	0.02
Dibenzo(a,h)anthracene	<0.06	<0.06	<0.06	<0.06	<0.06	<0.06	<0.100	<0.100	<0.13	--	--
Fluoranthene	<0.06	<0.06	0.89	<0.06	<0.06	<0.06	<5.00	<5.00	<0.083	400	80
Fluorene	<0.12	<0.12	0.26	0.16	<0.12	<0.12	<5.00	<5.00	<0.063	400	80
Indeno(1,2,3-cd)pyrene	<0.05	<0.05	0.12	<0.05	<0.05	<0.05	<0.200	<0.200	<0.063	--	--
1-Methylnaphthalene	<0.08	<0.08	0.08	<0.08	<0.08	<0.08	<5.00	<5.00	<0.33	--	--
2-Methylnaphthalene	<0.11	<0.11	0.13	<0.11	<0.11	<0.11	<5.00	<5.00	<0.32	--	--
Naphthalene	<0.1	<0.1	<0.1	<0.1	<0.1	<0.1	<5.00	<5.00	<0.41	40	8
Phenanthrene	<0.08	<0.08	0.23	0.18	0.13	<0.08	<5.00	<5.00	<0.031	--	--
Pyrene	<0.09	<0.09	1.31	<0.09	<0.09	<0.09	<5.00	<5.00	<0.045	250	50
Lab Note Number	(3)	(13)	--	(20)	(23)	--	--	(29)	--	--	--

Rev. JSP 8/28/02; TLR 11/25/02; JSP 12/27/02; JSP 1/10/03; TLR 01/24/03; JSP 4/24/03; LMH 4/24/03; SMS 7/22/03; LMH 4/5/04; LMH 10/25/04; LMH 9/30/05; TLR 04/11/06

Table E-3
PAH Concentrations in Groundwater
Hartmeyer AST Area / Project #1624
(Results in µg/l)

Compound	MW5									NR 140 enforcement standard (ES)	NR 140 preventive action limit (PAL)
	8/31/1999	9/6/2001	09/06/2001 Dup	4/25/2002	4/25/2002 Dup	7/24/2002	7/24/2002 Dup	9/25/2002	9/25/2002 Dup		
Acenaphthene	170	2,800	4,000	6.1	6.7	14	13	17.1	12.8	--	--
Acenaphthylene	<82	<450	<610	<0.21	<0.21	<0.16	<0.16	14.9	12.3	--	--
Anthracene	130	1,000	1,400	3.5	3.5	10	<0.024	<5.00	<5.00	3,000	600
Benzo(a)anthracene	540	14,000	18,000	5.2	4.2	<0.03	<0.03	<4.00	<4.00	--	--
Benzo(b)fluoranthene	<6.4	<39	<53	**0.41**	**0.29**	<0.036	<0.036	<4.00	<4.00	0.2	0.02
Benzo(k)fluoranthene	<4.4	<35	<48	<0.026	<0.026	<0.067	<0.067	<4.00	<4.00	--	--
Benzo(a)pyrene	<4.0	<16	<22	<0.014	<0.014	<0.022	<0.022	<1.70	<1.70	0.2	0.02
Benzo(g,h,i)perylene	<15	<77	<100	<0.16	<0.16	<0.087	<0.087	<5.00	<5.00	--	--
Chrysene	**190**	**1,100**	**2,500**	**2.2**	**1.7**	<0.022	<0.022	<5.00	<5.00	0.2	0.02
Dibenzo(a,h)anthracene	<24	<35	<48	<0.079	<0.079	<0.036	<0.036	<6.00	<6.00	--	--
Fluoranthene	**1,300**	**12,000**	**19,000**	18	<0.17	<0.053	<0.053	66.5	20.3	400	80
Fluorene	**760**	**7,900**	**11,000**	22	22	15	18	20.3	<12.0	400	80
Indeno(1,2,3-cd)pyrene	<12	<27	<37	<0.032	<0.032	<0.03	<0.03	<5.00	<5.00	--	--
1-Methylnaphthalene	2,300	49,000	73,000	160	170	140	150	151	128	--	--
2-Methylnaphthalene	3,200	82,000	121,000	140	140	150	140	108	89	--	--
Naphthalene	**730**	**19,000**	**30,000**	**200**	**190**	**120**	**130**	**114**	**95.4**	40	8
Phenanthrene	1,100	17,000	32,000	23	23	22	22	28.1	20.9	--	--
Pyrene	**1,100**	**34,000**	**46,000**	39	37	<0.13	<0.13	63.1	41.8	250	50
Lab Note Number	(4)	(4)	(5)	(6)	(6)	--	--	(7)	(7)	--	--

Rev. JSP 8/28/02; TLR 11/25/02; JSP 12/27/02; JSP 1/10/03; TLR 01/24/03; JSP 4/24/03; LMH 4/24/03; SMS 7/22/03; LMH 4/5/04; LMH 10/25/04; LMH 9/30/05; TLR 04/11/06

Table E-3
PAH Concentrations in Groundwater
Hartmeyer AST Area / Project #1624
(Results in µg/l)

Compound	MW5 (Cont.)									NR 140 enforcement standard (ES)	NR 140 preventive action limit (PAL)
	12/21/2002	12/21/2002 Dup	3/25/2003	3/25/2003 Dup	6/10/2003	6/10/2003 Dup	9/16/2003	3/10/2004	3/10/2004 Dup		
Acenaphthene	15	14	19.9	17.2	11.3	<0.06	17.9	<0.06	<0.06	--	--
Acenaphthylene	10.6	9.43	<0.06	<0.6	<0.06	<0.06	<0.06	<0.06	<0.06	--	--
Anthracene	<0.25	<0.25	4.56	4.14	3.71	3.92	6.67	<0.5	<0.05	3,000	600
Benzo(a)anthracene	<0.2	<0.2	4.36	<0.04	<0.04	<0.04	<0.04	<0.04	<0.04	--	--
Benzo(b)fluoranthene	<0.2	<0.2	<0.04	<0.04	<0.04	<0.04	<0.04	<0.04	<0.04	0.2	0.02
Benzo(k)fluoranthene	<0.2	<0.2	<0.04	<0.04	<0.04	<0.04	<0.04	<0.04	<0.04	--	--
Benzo(a)pyrene	<0.085	<0.085	<0.017	<0.017	<0.017	<0.017	<0.017	<0.017	<0.017	0.2	0.02
Benzo(g,h,i)perylene	<0.25	<0.25	<0.05	<0.05	<0.05	<0.05	<0.05	<0.05	<0.05	--	--
Chrysene	<0.25	<0.25	<0.05	<0.05	<0.05	<0.05	<0.05	<0.05	<0.05	0.2	0.02
Dibenzo(a,h)anthracene	<0.3	<0.3	<0.06	<0.06	<0.06	<0.06	<0.06	<0.06	<0.06	--	--
Fluoranthene	<0.3	<0.3	35.4	22.3	<0.06	<0.06	<0.06	<0.06	<0.06	400	80
Fluorene	12.9	12.4	16.5	14.0	11.9	12.7	10.9	<0.12	<0.12	400	80
Indeno(1,2,3-cd)pyrene	<0.25	<0.25	<0.05	<0.05	<0.05	<0.05	<0.05	<0.05	<0.05	--	--
1-Methylnaphthalene	162	135	192	162	113	136	86.6	163	177	--	--
2-Methylnaphthalene	121	102	162	134	93.5	113	85	184	202	--	--
Naphthalene	**138**	**116**	**173**	**148**	**113**	**137**	**74.2**	**171**	**194**	40	8
Phenanthrene	<0.4	<0.4	31.8	24.4	20	18.9	27.7	<0.8	<0.8	--	--
Pyrene	<0.45	<0.45	83.7	51.5	<0.09	<0.09	<0.09	<0.09	<0.09	250	50
Lab Note Number	--	--	--	--	--	--	--	--	--	--	--

Rev. JSP 8/28/02; TLR 11/25/02; JSP 12/27/02; JSP 1/10/03; TLR 01/24/03; JSP 4/24/03; LMH 4/24/03; SMS 7/22/03; LMH 4/5/04; LMH 10/25/04; LMH 9/30/05; TLR 04/11/06

Table E-3
PAH Concentrations in Groundwater
Hartmeyer AST Area / Project #1624
(Results in µg/l)

Compound	MW5 (Cont.)						MW6			NR 140 enforcement standard (ES)	NR 140 preventive action limit (PAL)
	9/30/2004	9/30/2004 Dup	3/9/2005	3/9/2005 Dup	9/9/2005	3/21/2006	8/31/1999	9/6/2001	4/25/2002		
Acenaphthene	23.6	28.0	5.78	10.3	5.6	9.0	0.57	2.5	<0.46	--	--
Acenaphthylene	5.79	<5.00	<50.0	<5.00	<0.69	<3.6	<0.55	<0.64	<0.21	--	--
Anthracene	<5.00	<5.00	<5.00	6.43	1.9	4.8	0.025	<0.030	<0.083	3,000	600
Benzo(a)anthracene	0.136	0.193	0.719	0.996	0.10	17	0.029	<0.033	<0.14	--	--
Benzo(b)fluoranthene	<0.0200	<0.0200	**0.312**	**0.413**	<0.098	<0.51	<0.043	<0.056	<0.042	0.2	0.02
Benzo(k)fluoranthene	<0.100	<0.100	<0.100	<0.100	<0.049	<0.26	<0.029	<0.050	<0.026	--	--
Benzo(a)pyrene	<0.0200	<0.0200	<0.0200	<0.0200	<0.032	<0.17	<0.027	<0.023	<0.014	0.2	0.02
Benzo(g,h,i)perylene	<5.00	<5.00	<5.00	<5.00	<0.12	<0.62	<0.10	<0.11	<0.16	--	--
Chrysene	0.0962	0.119	**1.38**	**1.92**	**0.23**	**3.2**	0.024	<0.029	<0.033	0.2	0.02
Dibenzo(a,h)anthracene	<0.100	<0.100	<0.100	<0.100	<0.13	<0.68	<0.16	<0.050	<0.079	--	--
Fluoranthene	<5.00	<5.00	50.7	69.2	16	17	0.26	<0.077	<0.12	400	80
Fluorene	7.81	9.86	22.9	28.4	13	24	0.12	0.34	<0.15	400	80
Indeno(1,2,3-cd)pyrene	<0.200	<0.200	<0.200	<0.200	<0.062	<0.32	<0.083	<0.039	<0.032	--	--
1-Methylnaphthalene	115	169	509	559	160	240	0.44	<0.51	<0.54	--	--
2-Methylnaphthalene	106	148	236	306	180	330	<0.60	<0.96	<0.51	--	--
Naphthalene	**76.9**	**107**	**98.3**	**130**	**310**	**280**	3.6	<0.38	<0.60	40	8
Phenanthrene	5.49	7.74	33.2	49	16	44	0.21	<0.078	<0.021	--	--
Pyrene	<5.00	<5.00	<5.00	<5.00	2.4	33	0.084	<0.061	<0.013	250	50
Lab Note Number	(25)	(25)	(30)	(30)	--	--	--	--	--	--	--

Rev. JSP 8/28/02; TLR 11/25/02; JSP 12/27/02; JSP 1/10/03; TLR 01/24/03; JSP 4/24/03; LMH 4/24/03; SMS 7/22/03; LMH 4/5/04; LMH 10/25/04; LMH 9/30/05; TLR 04/11/06

Table E-3
PAH Concentrations in Groundwater
Hartmeyer AST Area / Project #1624
(Results in µg/l)

Compound	MW6 (Cont.)									NR 140 enforcement standard (ES)	NR 140 preventive action limit (PAL)
	7/23/2002	9/24/2002	12/20/2002	3/25/2003	6/10/2003	9/15/2003	3/9/2004	9/29/2004	3/9/2005		
Acenaphthene	1.7	<0.06	<0.06	<0.06	<0.06	<0.06	<0.06	<5.00	<5.00	--	--
Acenaphthylene	<0.16	<0.06	<0.06	<0.06	<0.06	<0.06	<0.06	<5.00	<5.00	--	--
Anthracene	<0.024	<0.05	<0.05	<0.05	<0.05	<0.05	<0.05	<5.00	<5.00	3,000	600
Benzo(a)anthracene	<0.03	<0.04	<0.04	<0.04	<0.04	<0.04	<0.04	<0.100	<0.100	--	--
Benzo(b)fluoranthene	<0.036	<0.04	<0.04	<0.04	<0.04	<0.04	<0.04	<0.0200	<0.0200	0.2	0.02
Benzo(k)fluoranthene	<0.067	<0.04	<0.04	<0.04	<0.04	<0.04	<0.04	<0.100	<0.100	--	--
Benzo(a)pyrene	<0.022	0.067	<0.017	<0.017	<0.017	<0.017	<0.017	<0.0200	0.0217	0.2	0.02
Benzo(g,h,i)perylene	<0.087	<0.05	<0.05	<0.05	<0.05	<0.05	<0.05	<5.00	<5.00	--	--
Chrysene	<0.022	<0.05	<0.05	<0.05	<0.05	<0.05	<0.05	<0.0200	<0.0200	0.2	0.02
Dibenzo(a,h)anthracene	<0.036	0.14	<0.06	<0.06	<0.06	<0.06	<0.06	<0.100	<0.100	--	--
Fluoranthene	<0.053	<0.06	<0.06	<0.06	<0.06	<0.06	<0.06	<5.00	<5.00	400	80
Fluorene	<0.025	<0.12	<0.12	<0.12	<0.12	<0.12	<0.12	<5.00	<5.00	400	80
Indeno(1,2,3-cd)pyrene	<0.03	<0.05	<0.05	<0.05	<0.05	<0.05	<0.05	<0.200	<0.200	--	--
1-Methylnaphthalene	<0.095	<0.08	<0.08	<0.08	<0.08	0.084	<0.08	<5.00	<5.00	--	--
2-Methylnaphthalene	<0.096	<0.11	<0.11	<0.11	<0.11	<0.11	<0.11	<5.00	<5.00	--	--
Naphthalene	0.2	<0.1	0.26	<0.1	<0.1	0.497	<0.1	<5.00	<5.00	40	8
Phenanthrene	<0.036	<0.08	<0.08	<0.08	<0.08	<0.08	<0.08	<5.00	<5.00	--	--
Pyrene	<0.13	<0.09	<0.09	<0.09	<0.09	<0.09	<0.09	<5.00	<5.00	250	50
Lab Note Number	(8)	(9)	(10)	--	--	(21)	--	(26)	--	--	--

Rev. JSP 8/28/02; TLR 11/25/02; JSP 12/27/02; JSP 1/10/03; TLR 01/24/03; JSP 4/24/03; LMH 4/24/03; SMS 7/22/03; LMH 4/5/04; LMH 10/25/04; LMH 9/30/05; TLR 04/11/06

Table E-3
PAH Concentrations in Groundwater
Hartmeyer AST Area / Project #1624
(Results in µg/l)

Compound	MW6 (Cont.)	MW7								NR 140 enforcement standard (ES)	NR 140 preventive action limit (PAL)
	3/21/2006	8/31/1999	9/6/2001	4/25/2002	7/23/2002	9/24/2002	12/20/2002	3/25/2003	6/10/2003		
Acenaphthene	<0.34	<0.22	<0.40	<0.48	<0.053	<0.06	<0.06	<0.06	<0.06	--	--
Acenaphthylene	<0.70	<0.55	<0.64	<0.22	<0.16	<0.06	<0.06	<0.06	<0.06	--	--
Anthracene	<0.039	<0.018	<0.030	<0.087	<0.024	0.08	<0.05	<0.05	<0.05	3,000	600
Benzo(a)anthracene	<0.045	<0.017	<0.033	<0.15	<0.03	<0.04	<0.04	<0.04	<0.04	--	--
Benzo(b)fluoranthene	<0.10	<0.043	<0.056	<0.044	<0.036	<0.04	<0.04	<0.04	<0.04	0.2	0.02
Benzo(k)fluoranthene	<0.050	<0.029	<0.050	<0.027	<0.067	<0.04	<0.04	<0.04	<0.04	--	--
Benzo(a)pyrene	<0.033	<0.027	<0.023	<0.015	<0.022	<0.017	<0.017	<0.017	<0.017	0.2	0.02
Benzo(g,h,i)perylene	<0.12	<0.10	<0.11	<0.17	<0.087	<0.05	<0.05	<0.05	<0.05	--	--
Chrysene	<0.042	<0.013	<0.029	<0.035	<0.022	<0.05	<0.05	<0.05	<0.05	0.2	0.02
Dibenzo(a,h)anthracene	<0.13	<0.16	<0.050	<0.083	<0.036	<0.06	<0.06	<0.06	<0.06	--	--
Fluoranthene	<0.083	<0.10	<0.077	<0.13	<0.053	<0.06	<0.06	<0.06	<0.06	400	80
Fluorene	<0.063	<0.029	<0.078	<0.16	<0.025	<0.12	<0.12	<0.12	<0.12	400	80
Indeno(1,2,3-cd)pyrene	<0.063	<0.083	<0.039	<0.034	<0.03	<0.05	<0.05	<0.05	<0.05	--	--
1-Methylnaphthalene	<0.33	<0.40	<0.51	<0.57	<0.095	<0.08	<0.08	<0.08	<0.08	--	--
2-Methylnaphthalene	<0.32	<0.60	<0.96	<0.54	<0.096	<0.11	<0.11	<0.11	<0.11	--	--
Naphthalene	<0.41	<0.22	<0.38	<0.63	<0.067	<0.1	<0.1	<0.1	<0.1	40	8
Phenanthrene	<0.031	<0.014	<0.078	<0.022	<0.036	<0.08	<0.08	<0.08	<0.08	--	--
Pyrene	<0.045	<0.047	<0.061	<0.014	<0.13	<0.09	<0.09	<0.09	<0.09	250	50
Lab Note Number	--	--	--	--	--	(11)	(13)	--	--	--	--

Rev. JSP 8/28/02; TLR 11/25/02; JSP 12/27/02; JSP 1/10/03; TLR 01/24/03; JSP 4/24/03; LMH 4/24/03; SMS 7/22/03; LMH 4/5/04; LMH 10/25/04; LMH 9/30/05; TLR 04/11/06

Table E-3
PAH Concentrations in Groundwater
Hartmeyer AST Area / Project #1624
(Results in µg/l)

Compound	MW7 (Cont.)		MW10		MW11					NR 140 enforcement standard (ES)	NR 140 preventive action limit (PAL)
	3/9/2004	3/9/2005	9/6/2001	3/20/2006	9/6/2001	4/23/2002	7/23/2002	9/23/2002	12/19/2002		
Acenaphthene	<0.06	<5.00	<0.40	<0.34	<0.40	<0.47	<0.106	<0.06	<0.06	--	--
Acenaphthylene	<0.06	<5.00	<0.64	<0.72	<0.64	<0.22	<0.32	<0.06	<0.06	--	--
Anthracene	<0.05	<5.00	<0.030	<0.040	<0.030	<0.085	<0.048	<0.05	<0.05	3,000	600
Benzo(a)anthracene	<0.04	<0.100	<0.033	<0.046	<0.033	<0.14	<0.06	<0.04	<0.04	--	--
Benzo(b)fluoranthene	<0.04	<0.0200	<0.056	<0.10	<0.056	<0.043	<0.072	<0.04	<0.04	0.2	0.02
Benzo(k)fluoranthene	<0.04	<0.100	<0.050	<0.051	<0.050	<0.027	<0.134	<0.04	<0.04	--	--
Benzo(a)pyrene	<0.017	<0.0200	<0.023	<0.033	<0.023	<0.014	<0.044	0.06	<0.017	0.2	0.02
Benzo(g,h,i)perylene	<0.05	<5.00	<0.11	<0.12	<0.11	<0.16	<0.174	<0.05	<0.05	--	--
Chrysene	<0.05	<0.0200	<0.029	<0.043	<0.029	<0.034	<0.044	<0.05	<0.05	0.2	0.02
Dibenzo(a,h)anthracene	<0.06	<0.100	<0.050	<0.14	<0.050	<0.081	<0.072	<0.06	<0.06	--	--
Fluoranthene	<0.06	<5.00	<0.077	<0.084	<0.077	<0.12	<0.106	<0.06	<0.06	400	80
Fluorene	<0.12	<5.00	<0.078	<0.065	<0.078	<0.15	<0.05	<0.12	<0.12	400	80
Indeno(1,2,3-cd)pyrene	<0.05	<0.200	<0.039	<0.065	<0.039	<0.033	<0.06	<0.05	<0.05	--	--
1-Methylnaphthalene	<0.08	<5.00	<0.51	<0.33	<0.51	<0.56	<0.19	<0.08	<0.08	--	--
2-Methylnaphthalene	<0.11	<5.00	<0.96	<0.32	<0.96	<0.53	<0.192	<0.11	<0.11	--	--
Naphthalene	<0.1	<5.00	<0.38	<0.42	<0.38	<0.62	<0.134	<0.1	<0.1	40	8
Phenanthrene	<0.08	<5.00	<0.078	<0.031	<0.078	<0.022	<0.072	<0.08	<0.08	--	--
Pyrene	<0.09	<5.00	<0.061	<0.046	<0.061	<0.013	<0.26	<0.09	<0.09	250	50
Lab Note Number	--	--	--	--	--	--	--	(12)	(13)	--	--

Rev. JSP 8/28/02; TLR 11/25/02; JSP 12/27/02; JSP 1/10/03; TLR 01/24/03; JSP 4/24/03; LMH 4/24/03; SMS 7/22/03; LMH 4/5/04; LMH 10/25/04; LMH 9/30/05; TLR 04/11/06

Table E-3
PAH Concentrations in Groundwater
Hartmeyer AST Area / Project #1624
(Results in µg/l)

Compound	MW11 (Cont.)							MW12		NR 140 enforcement standard (ES)	NR 140 preventive action limit (PAL)
	3/24/2003	6/9/2003	9/15/2003	3/9/2004	9/29/2004	3/9/2005	3/20/2006	9/7/2001	12/21/2001		
Acenaphthene	<0.06	<0.06	<0.06	<0.06	<5.00	<5.00	<0.35	4.3	1.8	--	--
Acenaphthylene	<0.06	<0.06	<0.06	<0.06	<5.00	<5.00	<0.73	<6.4	<0.64	--	--
Anthracene	<0.05	<0.05	<0.05	<0.05	<5.00	<5.00	<0.040	1.6	0.86	3,000	600
Benzo(a)anthracene	<0.04	<0.04	<0.04	<0.04	<0.100	<0.100	<0.047	4	<0.033	--	--
Benzo(b)fluoranthene	<0.04	<0.04	<0.04	<0.04	<0.0200	<0.0200	<0.10	**0.84**	<0.056	0.2	0.02
Benzo(k)fluoranthene	<0.04	<0.04	<0.04	<0.04	<0.100	<0.100	<0.052	0.7	<0.050	--	--
Benzo(a)pyrene	<0.017	<0.017	<0.017	<0.017	<0.0200	<0.0200	<0.034	**1.5**	<0.023	0.2	0.02
Benzo(g,h,i)perylene	<0.05	<0.05	<0.05	<0.05	<5.00	<5.00	<0.13	2.2	<0.11	--	--
Chrysene	<0.05	<0.05	<0.05	<0.05	<0.0200	<0.0200	<0.044	**0.86**	<0.029	0.2	0.02
Dibenzo(a,h)anthracene	<0.06	<0.06	<0.06	<0.06	<0.100	<0.100	<0.14	<0.50	<0.050	--	--
Fluoranthene	<0.06	<0.06	<0.06	<0.06	<5.00	<5.00	<0.086	5.8	1.3	400	80
Fluorene	<0.12	<0.12	<0.12	<0.12	<5.00	<5.00	<0.066	5.2	4.1	400	80
Indeno(1,2,3-cd)pyrene	<0.05	<0.05	<0.05	<0.05	<0.200	<0.200	<0.066	1.2	<0.039	--	--
1-Methylnaphthalene	<0.08	<0.08	<0.08	<0.08	<5.00	<5.00	<0.34	6.8	5.3	--	--
2-Methylnaphthalene	<0.11	<0.11	<0.11	<0.11	<5.00	<5.00	<0.33	13	6	--	--
Naphthalene	<0.1	<0.1	<0.1	<0.1	<5.00	<5.00	<0.43	<3.8	<0.38	40	8
Phenanthrene	<0.08	<0.08	<0.08	<0.08	<5.00	<5.00	<0.032	4.1	4.2	--	--
Pyrene	<0.09	<0.09	<0.09	<0.09	<5.00	<5.00	<0.047	1.4	0.72	250	50
Lab Note Number	--	--	--	--	--	--	--	(4)	--	--	--

Rev. JSP 8/28/02; TLR 11/25/02; JSP 12/27/02; JSP 1/10/03; TLR 01/24/03; JSP 4/24/03; LMH 4/24/03; SMS 7/22/03; LMH 4/5/04; LMH 10/25/04; LMH 9/30/05; TLR 04/11/06

Table E-3
PAH Concentrations in Groundwater
Hartmeyer AST Area / Project #1624
(Results in µg/l)

Compound	MW12 (Cont.)									NR 140 enforcement standard (ES)	NR 140 preventive action limit (PAL)
	4/25/2002	7/24/2002	9/24/2002	12/20/2002	3/25/2003	6/10/2003	9/16/2003	3/10/2004	9/30/2004		
Acenaphthene	1	4.3	11.1	4.78	5.22	1.16	3.68	3.91	<5.00	--	--
Acenaphthylene	<0.22	<0.16	21.5	<0.06	<0.06	<0.12	<0.06	<0.06	<5.00	--	--
Anthracene	<0.086	<0.024	3.29	<0.05	1.90	0.29	1.42	<0.05	<5.00	3,000	600
Benzo(a)anthracene	0.23	<0.03	3.22	<0.04	0.75	<0.08	2.45	<0.04	0.162	--	--
Benzo(b)fluoranthene	<0.044	<0.036	**0.32**	<0.04	**0.28**	<0.08	<0.04	**0.312**	<0.0200	0.2	0.02
Benzo(k)fluoranthene	<0.027	<0.067	0.13	<0.04	0.15	<0.08	<0.04	<0.04	<0.100	--	--
Benzo(a)pyrene	<0.015	<0.022	0.108	<0.17	**0.237**	<0.034	**0.534**	**0.537**	0.0215	0.2	0.02
Benzo(g,h,i)perylene	<0.17	<0.087	0.18	<0.05	<0.05	<0.1	<0.05	<0.05	<5.00	--	--
Chrysene	0.13	<0.022	**0.64**	<0.05	<0.05	<0.1	**1.04**	<0.05	0.125	0.2	0.02
Dibenzo(a,h)anthracene	<0.082	<0.036	<0.6	<0.06	0.45	<0.12	<0.06	<0.06	<0.100	--	--
Fluoranthene	0.87	<0.053	16.7	<0.06	7.25	2.47	6.67	<0.06	<5.00	400	80
Fluorene	0.48	5.6	5.25	4.66	4.29	<0.24	3.28	<0.12	<5.00	400	80
Indeno(1,2,3-cd)pyrene	<0.033	<0.03	0.16	<0.05	0.15	<0.1	0.159	0.115	<0.200	--	--
1-Methylnaphthalene	<0.56	1.7	9.75	0.72	2.30	<0.16	<0.08	0.276	<5.00	--	--
2-Methylnaphthalene	1.2	<0.096	3.11	0.67	<0.11	<0.22	0.291	<0.11	<5.00	--	--
Naphthalene	<0.62	<0.067	10.7	<0.1	<0.1	<0.2	<0.1	<0.1	<5.00	40	8
Phenanthrene	0.097	1.6	5.68	<0.08	1.42	<0.16	1.17	<0.08	<5.00	--	--
Pyrene	1.5	<0.13	37	<0.09	12.4	3.38	9.94	<0.09	<5.00	250	50
Lab Note Number	--	--	(13)	(13)	(16)	(19)	(22)	(16)	(27)	--	--

Rev. JSP 8/28/02; TLR 11/25/02; JSP 12/27/02; JSP 1/10/03; TLR 01/24/03; JSP 4/24/03; LMH 4/24/03; SMS 7/22/03; LMH 4/5/04; LMH 10/25/04; LMH 9/30/05; TLR 04/11/06

Table E-3
PAH Concentrations in Groundwater
Hartmeyer AST Area / Project #1624
(Results in µg/l)

Compound	MW12 (Cont.)				MW13					NR 140 enforcement standard (ES)	NR 140 preventive action limit (PAL)
	3/9/2005	9/9/2005	3/21/2006	3/21/2006 DUP	9/6/2001	12/21/2001	4/25/2002	7/23/2002	9/24/2002		
Acenaphthene	<5.00	4.5	2.2	2.1	3.2	2.1	<0.46	3.5	<0.06	--	--
Acenaphthylene	<5.00	<0.69	<0.72	<0.72	<0.64	<0.64	<0.21	<0.16	<0.06	--	--
Anthracene	<5.00	0.17	0.49	0.48	0.044	<0.030	<0.083	<0.024	0.6	3,000	600
Benzo(a)anthracene	<0.100	0.65	0.52	0.65	<0.033	<0.033	<0.14	<0.03	<0.04	--	--
Benzo(b)fluoranthene	0.0203	<0.098	<0.10	<0.10	<0.056	<0.056	<0.042	<0.036	<0.04	0.2	0.02
Benzo(k)fluoranthene	<0.100	0.063	<0.051	<0.051	<0.050	<0.050	<0.026	<0.067	<0.04	--	--
Benzo(a)pyrene	<0.0200	0.098	<0.033	0.046	<0.023	<0.023	<0.014	<0.022	<0.017	0.2	0.02
Benzo(g,h,i)perylene	<5.00	<0.12	<0.12	<0.12	<0.11	<0.11	<0.16	<0.087	<0.05	--	--
Chrysene	0.0570	**0.38**	0.089	0.11	<0.029	<0.029	<0.033	<0.022	<0.05	0.2	0.02
Dibenzo(a,h)anthracene	<0.100	<0.13	<0.14	<0.14	<0.050	<0.050	<0.079	<0.036	<0.06	--	--
Fluoranthene	<5.00	0.50	1.1	1.4	0.12	<0.077	<0.12	<0.053	<0.06	400	80
Fluorene	<5.00	6.7	4	3.8	5.2	3.9	3.4	3.7	1.3	400	80
Indeno(1,2,3-cd)pyrene	<0.200	<0.062	<0.065	<0.065	<0.039	<0.039	<0.032	<0.03	<0.05	--	--
1-Methylnaphthalene	<5.00	<0.32	<0.33	<0.33	5.1	<0.51	2.7	<0.095	<0.08	--	--
2-Methylnaphthalene	<5.00	<0.31	<0.32	<0.32	19	<0.96	10	<0.096	<0.11	--	--
Naphthalene	<5.00	0.64	<0.42	<0.42	**73**	<0.38	35	<0.067	2.59	40	8
Phenanthrene	<5.00	0.68	0.59	0.56	1.1	0.96	0.8	<0.036	1.13	--	--
Pyrene	<5.00	0.89	<0.046	<0.046	0.16	<0.061	<0.013	<0.13	<0.09	250	50
Lab Note Number	(29)	(31)	(33)	(33)	--	--	(6)	--	(1)	--	--

Rev. JSP 8/28/02; TLR 11/25/02; JSP 12/27/02; JSP 1/10/03; TLR 01/24/03; JSP 4/24/03; LMH 4/24/03; SMS 7/22/03; LMH 4/5/04; LMH 10/25/04; LMH 9/30/05; TLR 04/11/06

Table E-3
PAH Concentrations in Groundwater
Hartmeyer AST Area / Project #1624
(Results in µg/l)

Compound	MW13 (Cont.)								NR 140 enforcement standard (ES)	NR 140 preventive action limit (PAL)
	12/20/2002	3/25/2003	6/10/2003	9/16/2003	3/10/2004	9/29/2004	3/9/2005	3/21/2006		
Acenaphthene	1.51	2.06	1.70	0.84	1.49	10.9	<5.00	0.97	--	--
Acenaphthylene	<0.06	<0.06	<0.06	<0.06	<0.06	<5.00	<5.00	<0.75	--	--
Anthracene	<0.05	0.26	<0.05	<0.05	<0.05	<5.00	<5.00	<0.041	3,000	600
Benzo(a)anthracene	<0.04	<0.04	<0.04	<0.04	<0.04	<0.100	<0.100	<0.048	--	--
Benzo(b)fluoranthene	<0.04	<0.04	<0.04	<0.04	<0.04	<0.0200	<0.0200	<0.11	0.2	0.02
Benzo(k)fluoranthene	<0.04	<0.04	<0.04	<0.04	<0.04	<0.100	<0.100	<0.053	--	--
Benzo(a)pyrene	<0.017	<0.017	<0.017	<0.017	<0.017	<0.0200	<0.0200	<0.035	0.2	0.02
Benzo(g,h,i)perylene	<0.05	<0.05	<0.05	<0.05	<0.05	<5.00	<5.00	<0.13	--	--
Chrysene	<0.05	<0.05	<0.05	<0.05	<0.05	<0.0200	<0.0200	<0.045	0.2	0.02
Dibenzo(a,h)anthracene	<0.06	<0.06	<0.06	<0.06	<0.06	<0.100	<0.100	<0.14	--	--
Fluoranthene	<0.06	<0.06	<0.06	<0.06	<0.06	<5.00	<5.00	<0.088	400	80
Fluorene	2.54	3.15	2.8	1.82	<0.12	<5.00	<5.00	1.5	400	80
Indeno(1,2,3-cd)pyrene	<0.05	<0.05	<0.05	<0.05	<0.05	<0.200	<0.200	<0.067	--	--
1-Methylnaphthalene	<0.08	<0.08	<0.08	<0.08	<0.08	19.8	<5.00	0.96	--	--
2-Methylnaphthalene	0.84	1.13	1.06	0.7	<0.11	<5.00	<5.00	5.6	--	--
Naphthalene	<0.1	2.51	2.34	1.85	<0.1	<5.00	<5.00	<0.43	40	8
Phenanthrene	<0.08	0.58	0.61	0.38	<0.08	<5.00	<5.00	<0.033	--	--
Pyrene	<0.09	<0.09	<0.09	<0.09	<0.09	<5.00	<5.00	<0.048	250	50
Lab Note Number	--	--	--	--	--	(28)	--	(34)	--	--

Rev. JSP 8/28/02; TLR 11/25/02; JSP 12/27/02; JSP 1/10/03; TLR 01/24/03; JSP 4/24/03; LMH 4/24/03; SMS 7/22/03; LMH 4/5/04; LMH 10/25/04; LMH 9/30/05; TLR 04/11/06

Table E-3
PAH Concentrations in Groundwater
Hartmeyer AST Area / Project #1624
(Results in µg/l)

Compound	MW14 (Cont.)									NR 140 enforcement standard (ES)	NR 140 preventive action limit (PAL)
	9/7/2001	4/25/2002	7/24/2002	9/24/2002	12/21/2002	3/25/2003	6/10/2003	9/16/2003	3/10/2004		
Acenaphthene	36	3.9	<0.053	12.6	9.96	13.0	6.4	6.0	<0.06	--	--
Acenaphthylene	<48	<0.21	<0.16	12.9	9.59	<0.06	<0.06	<0.06	<0.06	--	--
Anthracene	28	0.93	<0.024	3.98	<0.25	5.87	1.69	1.14	<0.05	3,000	600
Benzo(a)anthracene	340	0.59	<0.03	10.2	<0.2	4.77	<0.04	<0.04	<0.04	--	--
Benzo(b)fluoranthene	<4.2	<0.042	<0.036	<0.4	<0.2	<0.04	<0.04	<0.04	<0.04	0.2	0.02
Benzo(k)fluoranthene	<3.8	<0.026	<0.067	<0.4	<0.2	<0.04	<0.04	<0.04	<0.04	--	--
Benzo(a)pyrene	<1.7	<0.014	<0.022	<0.17	<0.085	<0.017	<0.017	<0.017	<0.017	0.2	0.02
Benzo(g,h,i)perylene	<8.2	<0.16	<0.087	<0.5	<0.25	<0.05	<0.05	<0.05	<0.05	--	--
Chrysene	**59**	0.098	<0.022	**9.35**	<0.25	<0.05	<0.05	<0.05	<0.05	0.2	0.02
Dibenzo(a,h)anthracene	<3.8	<0.079	<0.036	<0.6	<0.3	<0.06	<0.06	<0.06	<0.06	--	--
Fluoranthene	340	1.8	<0.053	23	<0.3	20.9	<0.06	<0.06	<0.06	400	80
Fluorene	200	6.9	9.9	17.5	12.8	13.9	6.92	7.61	<0.12	400	80
Indeno(1,2,3-cd)pyrene	<2.9	<0.032	<0.03	<0.5	<0.25	<0.05	<0.05	<0.05	<0.05	--	--
1-Methylnaphthalene	1,100	7.4	2	18.6	8.52	11.3	<0.08	<0.08	<0.08	--	--
2-Methylnaphthalene	1,200	19	<0.096	4.64	3.36	3.37	1.41	0.982	<0.11	--	--
Naphthalene	**330**	39	1.7	4.08	5.29	4.63	2.9	2.08	<0.1	40	8
Phenanthrene	410	1.3	2.6	4.65	<0.4	2.78	1.46	1.05	<0.08	--	--
Pyrene	**560**	1.7	<0.13	38.6	<0.45	29.0	<0.09	<0.09	<0.09	250	50
Lab Note Number	(4)	(6)	--	(14)	--	(15)	--	--	--	--	--

Rev. JSP 8/28/02; TLR 11/25/02; JSP 12/27/02; JSP 1/10/03; TLR 01/24/03; JSP 4/24/03; LMH 4/24/03; SMS 7/22/03; LMH 4/5/04; LMH 10/25/04; LMH 9/30/05; TLR 04/11/06

Table E-3
PAH Concentrations in Groundwater
Hartmeyer AST Area / Project #1624
(Results in µg/l)

Compound	MW14 (Cont.)			MW15						NR 140 enforcement standard (ES)	NR 140 preventive action limit (PAL)
	9/30/2004	3/9/2005	3/21/2006	9/6/2001	4/23/2002	7/22/2002	9/23/2002	12/18/2002	3/24/2003		
Acenaphthene	<5.00	<5.00	2.7	<0.40	<0.48	<0.106	<0.06	<0.06	<0.06	--	--
Acenaphthylene	<5.00	<5.00	<0.71	<0.64	<0.22	<0.32	<0.06	<0.06	<0.06	--	--
Anthracene	<5.00	<5.00	<0.039	<0.030	<0.086	<0.048	<0.05	<0.05	<0.05	3,000	600
Benzo(a)anthracene	<0.100	<0.100	<0.045	<0.033	<0.15	<0.06	<0.04	<0.04	<0.04	--	--
Benzo(b)fluoranthene	<0.0200	<0.0200	<0.10	<0.056	<0.044	<0.072	<0.04	<0.04	<0.04	0.2	0.02
Benzo(k)fluoranthene	<0.100	<0.100	<0.051	<0.050	<0.027	<0.134	<0.04	<0.04	<0.04	--	--
Benzo(a)pyrene	<0.0200	<0.0200	<0.033	<0.023	<0.015	<0.044	0.077	<0.017	<0.017	0.2	0.02
Benzo(g,h,i)perylene	<5.00	<5.00	<0.12	<0.11	<0.17	<0.174	<0.05	<0.05	<0.05	--	--
Chrysene	0.122	<0.0200	<0.042	<0.029	<0.034	<0.044	<0.05	<0.05	<0.05	0.2	0.02
Dibenzo(a,h)anthracene	<0.100	<0.100	<0.13	<0.050	<0.082	<0.072	<0.06	<0.06	<0.06	--	--
Fluoranthene	<5.00	<5.00	<0.084	<0.077	<0.12	<0.106	<0.06	<0.06	<0.06	400	80
Fluorene	<5.00	<5.00	5.9	<0.078	<0.16	<0.05	<0.12	<0.12	<0.12	400	80
Indeno(1,2,3-cd)pyrene	<0.200	<0.200	<0.064	<0.039	<0.033	<0.06	<0.05	<0.05	<0.05	--	--
1-Methylnaphthalene	<5.00	23.3	3.1	<0.51	<0.56	<0.19	<0.08	<0.08	<0.08	--	--
2-Methylnaphthalene	<5.00	<5.00	11	<0.96	<0.53	<0.192	<0.11	<0.11	<0.11	--	--
Naphthalene	<5.00	<5.00	<0.41	<0.38	<0.62	<0.134	<0.1	<0.1	<0.1	40	8
Phenanthrene	<5.00	<5.00	<0.031	<0.078	<0.022	<0.072	<0.08	<0.08	<0.08	--	--
Pyrene	<5.00	<5.00	<0.045	<0.061	<0.014	<0.26	<0.09	<0.09	<0.09	250	50
Lab Note Number	(26)	(29)	--	--	--	--	(11)	(13)	--	--	--

Rev. JSP 8/28/02; TLR 11/25/02; JSP 12/27/02; JSP 1/10/03; TLR 01/24/03; JSP 4/24/03; LMH 4/24/03; SMS 7/22/03; LMH 4/5/04; LMH 10/25/04; LMH 9/30/05; TLR 04/11/06

Table E- 3
PAH Concentrations in Groundwater
Hartmeyer AST Area / Project #1624
(Results in µg/l)

Compound	MW15 (Cont.)					MW16			NR 140 enforcement standard (ES)	NR 140 preventive action limit (PAL)
	6/9/2003	9/15/2003	3/8/2004	9/29/2004	3/8/2005	9/6/2001	3/9/2004	3/8/2005		
Acenaphthene	<0.06	<0.06	<0.06	<5.00	<5.00	<0.40	<0.06	<5.00	--	--
Acenaphthylene	<0.06	<0.06	<0.06	<5.00	<5.00	<0.64	<0.06	<5.00	--	--
Anthracene	<0.05	<0.05	<0.05	<5.00	<5.00	<0.030	<0.05	<5.00	3,000	600
Benzo(a)anthracene	<0.04	<0.04	<0.04	<0.100	<0.100	<0.033	<0.04	<0.100	--	--
Benzo(b)fluoranthene	<0.04	<0.04	<0.04	<0.0200	<0.0200	<0.056	<0.04	<0.0200	0.2	0.02
Benzo(k)fluoranthene	<0.04	<0.04	<0.04	<0.100	<0.100	<0.050	<0.04	<0.100	--	--
Benzo(a)pyrene	<0.017	<0.017	<0.017	<0.0200	<0.0200	<0.023	<0.017	<0.0200	0.2	0.02
Benzo(g,h,i)perylene	<0.05	<0.05	<0.05	<5.00	<5.00	<0.11	<0.05	<5.00	--	--
Chrysene	<0.05	<0.05	<0.05	<0.0200	<0.0200	<0.029	<0.05	<0.0200	0.2	0.02
Dibenzo(a,h)anthracene	<0.06	<0.06	<0.06	<0.100	<0.100	<0.050	<0.06	<0.100	--	--
Fluoranthene	<0.06	<0.06	<0.06	<5.00	<5.00	<0.077	<0.06	<5.00	400	80
Fluorene	<0.12	<0.12	<0.12	<5.00	<5.00	<0.078	<0.12	<5.00	400	80
Indeno(1,2,3-cd)pyrene	<0.05	<0.05	<0.05	<0.200	<0.200	<0.039	<0.05	<0.200	--	--
1-Methylnaphthalene	<0.08	<0.08	<0.08	<5.00	<5.00	<0.51	<0.08	<5.00	--	--
2-Methylnaphthalene	<0.11	<0.11	<0.11	<5.00	<5.00	<0.96	<0.11	<5.00	--	--
Naphthalene	<0.1	<0.1	<0.1	<5.00	<5.00	<0.38	<0.1	<5.00	40	8
Phenanthrene	<0.08	<0.08	<0.08	<5.00	<5.00	<0.078	<0.08	<5.00	--	--
Pyrene	<0.09	<0.09	<0.09	<5.00	<5.00	<0.061	<0.09	<5.00	250	50
Lab Note Number	--	--	--	--	--	--	--	--	--	--

Rev. JSP 8/28/02; TLR 11/25/02; JSP 12/27/02; JSP 1/10/03; TLR 01/24/03; JSP 4/24/03; LMH 4/24/03; SMS 7/22/03; LMH 4/5/04; LMH 10/25/04; LMH 9/30/05; TLR 04/11/06

Table E- 3
PAH Concentrations in Groundwater
Hartmeyer AST Area / Project #1624
(Results in µg/l)

Compound	Field Blank							Rinsate Blank		NR 140 enforcement standard (ES)	NR 140 preventive action limit (PAL)
	8/31/1999	12/21/2001	9/25/2002	6/10/2003	9/16/2003	3/10/2004	9/30/2004	12/21/2002	4/23/2002		
Acenaphthene	<0.73	<0.40	<0.06	<0.06	<0.06	<0.06	<5.00	<0.06	<0.48	--	--
Acenaphthylene	<1.8	<0.65	<0.06	<0.06	<0.06	<0.06	<5.00	<0.06	<0.22	--	--
Anthracene	<0.060	<0.030	<0.05	<0.05	<0.05	<0.05	<5.00	<0.05	<0.086	3,000	600
Benzo(a)anthracene	<0.057	<0.033	<0.04	<0.04	<0.04	<0.04	<0.100	<0.04	<0.15	--	--
Benzo(b)fluoranthene	<0.14	<0.057	<0.04	<0.04	<0.04	<0.04	<0.0200	<0.04	<0.044	0.2	0.02
Benzo(k)fluoranthene	<0.097	<0.050	<0.04	<0.04	<0.04	<0.04	<0.100	<0.04	<0.027	--	--
Benzo(a)pyrene	<0.090	<0.023	<0.017	<0.017	<0.017	<0.017	<0.0200	<0.017	<0.015	0.2	0.02
Benzo(g,h,i)perylene	<0.33	<0.11	<0.05	<0.05	<0.05	<0.05	<5.00	<0.05	<0.17	--	--
Chrysene	<0.043	<0.029	<0.05	<0.05	<0.05	<0.05	<0.0200	<0.05	<0.034	0.2	0.02
Dibenzo(a,h)anthracene	<0.53	<0.050	<0.06	<0.06	<0.06	<0.06	<0.100	<0.06	<0.082	--	--
Fluoranthene	<0.33	<0.078	<0.06	<0.06	<0.06	<0.06	<5.00	<0.06	<0.12	400	80
Fluorene	<0.097	<0.079	<0.12	<0.12	<0.12	<0.12	<5.00	<0.12	<0.16	400	80
Indeno(1,2,3-cd)pyrene	<0.28	<0.039	<0.05	<0.05	<0.05	<0.05	<0.200	<0.05	<0.033	--	--
1-Methylnaphthalene	<1.3	<0.52	<0.08	<0.08	<0.08	<0.08	<5.00	<0.08	<0.56	--	--
2-Methylnaphthalene	<2.0	<0.97	<0.11	<0.11	0.153	<0.11	<5.00	<0.11	<0.53	--	--
Naphthalene	<0.73	<0.38	<0.1	<0.1	0.168	<0.1	<5.00	<0.1	<0.62	40	8
Phenanthrene	<0.047	<0.079	<0.08	<0.08	<0.08	<0.08	<5.00	<0.08	<0.022	--	--
Pyrene	<0.16	<0.062	<0.09	<0.09	<0.09	<0.09	<5.00	<0.09	<0.014	250	50
Lab Note Number	--	--	(2)	--	(24)	--	--	--	--	--	--

Rev. JSP 8/28/02; TLR 11/25/02; JSP 12/27/02; JSP 1/10/03; TLR 01/24/03; JSP 4/24/03; LMH 4/24/03; SMS 7/22/03; LMH 4/5/04; LMH 10/25/04; LMH 9/30/05; TLR 04/11/06

Table E- 3
PAH Concentrations in Groundwater
Hartmeyer AST Area / Project #1624
(Results in µg/l)

Compound	Rinsate Blank (Cont.)				NR 140 enforcement standard (ES)	NR 140 preventive action limit (PAL)
	4/25/2002	3/14/2005	3/16/2005	3/20/2006		
Acenaphthene	<0.50	<5.00	<5.00	<0.85	--	--
Acenaphthylene	<0.23	<5.00	<5.00	<1.8	--	--
Anthracene	<0.090	<5.00	<5.00	<0.097	3,000	600
Benzo(a)anthracene	<0.15	<0.100	<0.100	<0.11	--	--
Benzo(b)fluoranthene	<0.045	<0.0200	<0.0200	<0.25	0.2	0.02
Benzo(k)fluoranthene	<0.028	<0.100	<0.100	<0.13	--	--
Benzo(a)pyrene	<0.015	<0.0200	<0.0200	<0.082	0.2	0.02
Benzo(g,h,i)perylene	<0.17	<5.00	<5.00	<0.31	--	--
Chrysene	<0.036	<0.0200	<0.0200	<0.11	0.2	0.02
Dibenzo(a,h)anthracene	<0.085	<0.100	<0.100	<0.33	--	--
Fluoranthene	<0.13	<5.00	<5.00	<0.21	400	80
Fluorene	<0.16	<5.00	<5.00	<0.16	400	80
Indeno(1,2,3-cd)pyrene	<0.035	<0.200	<0.200	<0.16	--	--
1-Methylnaphthalene	<0.58	<5.00	<5.00	<0.82	--	--
2-Methylnaphthalene	<0.55	<5.00	<5.00	<0.79	--	--
Naphthalene	<0.65	<5.00	<5.00	<1.0	40	8
Phenanthrene	<0.023	<5.00	<5.00	<0.077	--	--
Pyrene	<0.014	<5.00	<5.00	<0.11	250	50
Lab Note Number	--	--	--	--	--	--

Rev. JSP 8/28/02; TLR 11/25/02; JSP 12/27/02; JSP 1/10/03; TLR 01/24/03; JSP 4/24/03; LMH 4/24/03; SMS 7/22/03; LMH 4/5/04; LMH 10/25/04; LMH 9/30/05; TLR 04/11/06

Table E-3
PAH Concentrations in Groundwater
Hartmeyer AST Area / Project #1624

ABBREVIATIONS:

AST = Aboveground Storage Tank

PAH = Polynuclear Aromatic Hydrocarbon

NOTES:

1 Bold value indicates ES exceedance.

2 -- indicates groundwater standard is not established.

COMMENTS ON PAH SAMPLING METHODS:

Samples collected on August 31, 1999 (MW2 – MW7) were collected using a bailer, following well purging at low flow with a peristaltic pump.

Samples collected on September 6, 2001 (MW1 – MW7 and MW10 – MW16) were collected using a bailer, following well purging with a bailer.

Samples collected on December 21, 2001 (MW12 and MW13) were collected using a peristaltic pump at low flow, following purging with a peristaltic pump at low flow.

Samples collected in April, July, and September 2002 (MW1 – MW7 and MW10 – MW16) were collected using a peristaltic pump at low flow, following purging with a peristaltic pump at low flow.

LABORATORY NOTES:

(1) Acenaphthene, 1-Methyl Naphthalene - Exhibited a low bias; Acenaphthene, Anthracene, Benzo(a)Pyrene, Benzo(g,h,i)Perylene, 1-Methyl Naphthalene, Pyrene - Exhibited high bias; Benzo(a)Pyrene, Pyrene - Exceeds limits for precision; 1-Methyl Naphthalene - Exhibited low bias; Pyrene - Exhibited high bias.

(2) PAH extraction – Sediment present.

(3) Acenaphthene – Standard exhibited low bias, laboratory sample exhibited high bias; Benzo(a)Pyrene, Benzo(g,h,i)Perylene, 2-Methyl Naphthalene – exhibited high bias; Dibenzo(a,h)Anthracene – laboratory sample exhibited low bias.

(4) PAHs – Matrix interference.

(5) PAHs – Matrix interference. Phenanthrene – Estimated Concentration.

(6) PAHs – Matrix interference. Surr: 2-Fluorobiphenyl analysis – Matrix interference and standard outside of control limits.

(7) Benzo(a)Pyrene – Exhibited high bias; Dibenzo(a,h)Anthracene – exhibited low bias.

(8) Naphthalene analysis – Analyte detected between LOD and LOQ.

(9) Acenaphthene, 1-Methyl Naphthalene – Exhibited low bias; Acenaphthene, Pyrene – laboratory sample exhibited high bias; Anthracene, Benzo(a)Pyrene, Benzo(g,h,i)Perylene, 1-Methyl Naphthalene, Pyrene – exhibited high bias; Benzo(a)Pyrene, Pyrene – exceeds the limits for precision; Dibenzo(a,h)Anthracene – estimated concentration below laboratory quantitation level; 1-MethylNaphthalene – laboratory sample exhibited low bias.

(10) Benzo(g,h,i)Perylene, Dibenzo(a,h)Anthracene analysis - Laboratory control sample for this analyte exhibited a high bias. Naphthalene analysis - Estimated concentration below laboratory quantitation level.

(11) Acenaphthene, 1-Methyl Naphthalene – Exhibited low bias; Acenaphthene, Pyrene – laboratory sample exhibited high bias; Anthracene – estimated concentration below laboratory quantitation; Anthracene, Benzo(a)Pyrene, Benzo(g,h,i)Perylene, 1-Methyl Naphthalene, Pyrene – exhibited high bias; Benzo(a)Pyrene, Pyrene – exceeds the limits for precision; 1-Methyl Naphthalene – exhibited low bias.

(12) PAHs – Exceeds limits for precision; Acenaphthene, Pyrene – Exhibited high bias.

(13) Benzo(g,h,i)Perylene, Dibenzo(a,h)Anthracene analysis - Laboratory control sample for this analyte exhibited a high bias.

(14) Benzo(a)pyrene – Exhibited high bias; Dibenzo(a,h)Anthracene – exhibited low bias.

(15) 9,10-Diphenylanthracene (s) - Surrogate recovery was high. Result for sample may be biased high.

(16) Indeno(1,2,3-cd)Pyrene - Estimated concentration below laboratory quantitation.

(17) Benzo(b)Fluoranthene, Benzo(k)Fluoranthene, Chrysene, Fluorene, Indeno(1,2,3-cd)Pyrene, 1-Methyl Naphthalene, 2-Methyl Naphthalene, and Phenanthrene - Estimated concentration below laboratory quantitation.

Rev. JSP 8/28/02; TLR 11/25/02; JSP 12/27/02; JSP 1/10/03; TLR 01/24/03; JSP 4/24/03; LMH 4/24/03; SMS 7/22/03; LMH 4/5/04; LMH 10/25/04 TLR 04/10/06

Table E-3
PAH Concentrations in Groundwater
Hartmeyer AST Area / Project #1624

(18) 1-2Methyl Naphthalene, 2-Methyl Naphthalene - Estimated concentration below laboratory quantitation level.
(19) Anthracene - Estimated concentration below laboratory quantitation level.
(20) Acenaphthene, Anthracene, Fluorene, Phenanthrene - Estimated concentration below laboratory quantitation level.
(21) 1-Methyl Naphthalene - Estimated concentration below laboratory quantitation level.
(22) Indeno(1,2,3-cd)Pyrene & 2-Methyl Naphthalene - Estimated concentration below laboratory quantitation level.
(23) Anthracene & Phenanthrene - Estimated concentration below laboratory quantitation level.
(24) 2-Methyl Naphthalene & Naphthalene - Estimated concentration below laboratory quantitation level.
(25) 2-Methylnaphthalene analysis - The check standard that corresponds to this sample met the SW846 method requirements. However, it should be noted that the recovery for this individual compound in the check standard was above 115%. Surrogate: Carbazole analysis - This quality control measurement is above the laboratory established limit.
(26) Surrogate: Carbazole analysis - This quality control measurement is above the laboratory established limit.
(27) Benzo(a)pyrene analysis - The check standard that corresponds to this sample met the SW846 method requirements. However, it should be noted that the recovery for this individual compound in the check standard was above 115%.
(28) 1- and 2-Methylnaphthalene analyses - The check standard that corresponds to this sample met the SW846 method requirements. However, it should be noted that the recovery for this individual compound in the check standard was above 115%. Surrogate: Carbazole analysis - This quality control measurement is above the laboratory established limit.
(29) Benzo(a)pyrene analysis - The check standard that corresponds to this sample met the SW846 method requirements. However, it should be noted that the recovery for this individual compound in the check standard was below 85%.
(30) Benzo(a)pyrene and Pyrene analyses - The check standard that corresponds to this sample met the SW846 method requirements. However, it should be noted that the recovery for this individual compound in the check standard was below 85%.
(31) Benzo(k)fluoranthene, benzo(a)pyrene, and naphthalene analyses - Results reported between the Method Detection Limnit (MDL) and Limit of Quantitation (LOQ) are less certain than results at or above the LOQ.
(32) Benzo(a)anthracene analysis - Results reported between the Method Detection Limit (MDL) and Limit of Quantitation (LOQ) are less certain than results at or above the LOQ.

By: LH; JN 4/13/05
Checked: JM Date: 11/27/02, 1/10/03, 4/24/03, 7/25/03, 10/24/03, 4/23/04, 10/27/04, 4/15/05, 10/10/05, 4/11/06

Table E-5
Summary of Product Removal at MW5
Hartmeyer AST Site / BT^2 #1624

Date	Depth to Product (feet)	Depth to Water (feet)	Apparent Product Thickness (feet)	Remarks	Estimated Volume Removed (liters)	Cumulative Volume Removed (liters)
8/31/1999	4.84	6.68	1.84		1	1.00
11/23/1999	6.58	9.21	2.63	Installed petro bailer. Product was amber colored.	1.50	2.50
3/16/2000	NM	NM	NM		1.50	4.00
4/17/2000	NM	NM	0.42	Product thickness measured after petro bailer removed	1.00	5.00
5/1/2000	NM	NM	NM		1.30	6.30
5/8/2000	NM	NM	0.77	Product thickness measured after petro bailer removed	1.20	7.50
5/17/2000	NM	NM	0.05	Product thickness measured after petro bailer removed	1.40	8.90
5/22/2000	NM	NM	NM		0.70	9.60
6/9/2000	NM	NM	NM		3.70	13.30
6/12/2000	2.70	NM	0.70		0.47	13.77
6/19/2000	NM	NM	0.69	Depth to product is less that 3 feet bgs.	0.47	14.24
6/27/2000	2.81	2.96	0.15		0.66	14.90
7/5/2000	NM	NM	2.00	Measured 2 feet of product using clear bailer.	1.99	16.89
7/10/2000	NM	NM	2.06	Measured 2 feet of product using clear bailer.	1.99	18.88
7/17/2000	2.75	NM	3.00	Measured 3 feet of product using clear bailer.	2.98	21.86
7/24/2000	3.63	NM	NM		1.87	23.73
8/4/2000	3.75	NM	NM		2.7	26.43
8/11/2000	3.83	NM	3.00	Measured 3 feet of product using clear bailer.	2.11	28.54
8/25/2000	4.11	NM	NM		2.62	31.16
9/5/2000	NM	NM	NM		2.58	33.74
9/13/2000	3.92	NM	NM		2.46	36.20
9/20/2000	4.18	NM	NM		2.46	38.66
10/4/2000	4.72	NM	NM		2.51	41.17
10/11/2000	4.92	NM	NM		2.26	43.43
2/8/2001	5.26	8.39	3.13	Used interface probe.	1.7	45.13
2/14/2001	4.55	5.45	0.90	Used interface probe.	0.42	45.55
2/23/2001	4.85	6.87	2.02	Used interface probe.	0.90	46.45
3/9/2001	3.91	7.02	3.11	Used interface probe.	1.20	47.65
9/7/2001	5.36	8.86	3.50		5.60	53.25
11/13/2001	4.59	8.89	4.30	Used interface probe.	4.70	57.95
12/19/2001	4.76	8.54	3.78	Used interface probe. Product bailed on 12/21/01.	5.60	63.55
4/24/2002	3.24	8.04	4.80	Used interface probe.	3.80	67.35
7/22/2002	4.30	9.35	5.05	Used interface probe.	2.00	69.35
9/24/2002	5.31	9.51	4.20	Used interface probe.	3.60	72.95
12/21/2002	5.60	8.99	3.39	Used interface probe.	2.00	74.95
3/25/2003	5.89	8.73	2.84	Used interface probe.	1.5	76.45
6/9/2003	4.29	9.05	4.76	Used interface probe.	2.8	79.25
9/15/2003	4.55	8.21	3.66	Used interface probe.	1.9	81.15
7/1/2004	1.99	6.70	4.71	Used interface probe.	3.8	84.95
9/28/2004	3.30	8.94	5.64	Used interface probe.	5.6	90.55
12/16/2004	2.62	7.98	5.36	Used interface probe.	3.5	94.05
3/8/2005	3.09	8.95	5.86	Used interface probe.	9.45	103.50
6/28/2005	3.30	8.45	5.15	Used interface probe.	5.7	109.20
9/9/2005	4.73	8.89	4.16	Used interface probe.	5.7	114.90
12/2/2005	4.11	7.82	3.71	Used interface probe.	4.7	119.60
3/20/2006	2.38	8.14	5.76	Used interface probe.	9.45	129.05
6/21/2006	2.48	7.45	4.97	Used interface probe.	6.8	135.85

Notes:
From 8/31/99 to 3/16/00, product and purge water discharged into Oscar Mayer Waste Water Treatment Plant.
Following 3/16/00, product placed in drum to be removed by oil recycling company, as coordinated by Oscar Mayer.
Petrotrap reservoir volume is 0.2 gal. = 0.75 L . Note: one foot of product in 2" well = 0.163 gal = 0.616 L.

Table C-1
DRO, GRO, and PVOC Concentrations in Soil
Hartmeyer AST Area / Project #1624
(Results are in µg/kg, except where noted otherwise)

Sample	Date	Depth (feet)	PID	Lab Notes	DRO (mg/kg)	GRO (mg/kg)	Benzene	Ethylbenzene	Toluene	Xylenes	1,2,4-TMB	1,3,5-TMB	MTBE
GB101 S1	6/12/01	2	1.9	(1)	**612**	NA	<36	42	42	<110	36	<36	<36
GB101 S5	6/12/01	9	0.3	--	28	NA	NA	NA	NA	NA	NA	NA	NA
GB102 S1	6/12/01	2	10.6	(2)	**5,170**	NA	**270**	1,250	886	1,220	443	210	<92
GB102 S4	6/12/01	8	1.9	--	9.6	NA	NA	NA	NA	NA	NA	NA	NA
GB103 S1	6/12/01	1	0.3	--	**163**	NA	**45**	80	39	<100	51	<34	<34
GB103 S6	6/12/01	12	18.5	--	78	NA	NA	NA	NA	NA	NA	NA	NA
GB104 S1	6/12/01	1	1.1	--	**966**	NA	**79**	152	67	178	99	57	<32
GB104 S5	6/12/01	9	4.3	--	<7.7	NA	NA	NA	NA	NA	NA	NA	NA
GB105 S1	6/12/01	1	1.9	(2)	**713**	NA	**34**	178	88	329	274	110	<34
GB105 S3	6/12/01	6	5.1	--	68	NA	NA	NA	NA	NA	NA	NA	NA
GB106 S2	6/12/01	4	1.1	(2)	**1,850**	NA	**33**	79	65	198	120	48	<33
GB106 S4	6/12/01	8	9.0	--	11	NA	NA	NA	NA	NA	NA	NA	NA
GB107 S2	6/12/01	4	0.3	--	**1,050**	NA	<30	<30	<30	<89	<30	<30	<30
GB107 S4	6/12/01	8	82	--	**1,320**	NA	NA	NA	NA	NA	NA	NA	NA
GB108 S1	6/12/01	1	1.1	--	**1,410**	NA	**32**	46	54	128	66	<32	<32
GB108 S4	6/12/01	8	1.1	--	12	NA	NA	NA	NA	NA	NA	NA	NA
GB109 S1	6/12/01	2	72	(2)	**1,610**	NA	**47**	323	186	720	546	136	<31
GB109 S4	6/12/01	8	81	(3)	20	NA	NA	NA	NA	NA	NA	NA	NA
GB110 S2	6/13/01	4	0	--	9.1	NA	<40	<40	<40	<120	<40	<40	<40
GB110 S4	6/13/01	7	0.8	--	<6.2	NA	NA	NA	NA	NA	NA	NA	NA
GB111 S2	6/13/01	4	0	(1)	65	NA	**65**	140	234	315	110	<29	<29
GB111 S4	6/13/01	8	0	--	<6.4	NA	NA	NA	NA	NA	NA	NA	NA

Table C-1 (Continued)
DRO, GRO, and PVOC Concentrations in Soil

Sample	Date	Depth (feet)	PID	Lab Notes	DRO (mg/kg)	GRO (mg/kg)	Benzene	Ethylbenzene	Toluene	Xylenes	1,2,4-TMB	1,3,5-TMB	MTBE
GB112 S2	6/13/01	4	0	--	83	NA	<30	<30	<30	<89	<30	<30	<30
GB112 S4	6/13/01	8	0	--	<6.3	NA	NA	NA	NA	NA	NA	NA	NA
GB113 S2	6/13/01	4	0	(1)	58	NA	<29	46	<29	99	62	<29	<29
GB113 S4	6/13/01	8	0	--	<6.3	NA	NA	NA	NA	NA	NA	NA	NA
GB114 S2	6/13/01	4	152	(2)	**168**	NA	<65	323	<65	258	748	348	<65
GB114 S4	6/13/01	8	6	--	11	NA	NA	NA	NA	NA	NA	NA	NA
GB115 S2	6/13/01	4	47	(4)	**4,060**	NA	<148	1,720	172	530	2,590	<148	<148
GB116 S1	6/13/01	1	1.6	(1)	**9,580**	NA	**72**	126	120	189	110	48	<32
GB116 S4	6/13/01	8	2.4	--	<6.3	NA	NA	NA	NA	NA	NA	NA	NA
GB117 S2	6/13/01	4	1.6	(2)	**5,010**	NA	<626	**3,250**	<626	<1,880	12,300	5,010	<626
GB117 S4	6/13/01	8	152	--	**10,200**	NA	NA	NA	NA	NA	NA	NA	NA
GB118 S1	6/13/01	1	1.6	(2)	**2,410**	NA	**265**	361	710	1,010	409	84	<30
GB118 S4	6/13/01	8	37	--	46	NA	NA	NA	NA	NA	NA	NA	NA
GB119 S1	6/13/01	1	0.8	--	39	NA	<35	<35	<35	<110	<35	<35	<35
GB119 S4	6/13/01	8	0.8	--	<6.6	NA	NA	NA	NA	NA	NA	NA	NA
GB120 S2	6/14/01	4	0.8	--	25	NA	<36	<36	<36	<110	<36	<36	<36
GB120 S4	6/14/01	8	55	--	**1,910**	NA	NA	NA	NA	NA	NA	NA	NA
GB121 S2	6/14/01	4	60	(2)	**1,020**	NA	<63	514	<63	<188	3,630	977	<63
GB121 S4	6/14/01	8	115	--	**821**	NA	NA	NA	NA	NA	NA	NA	NA
GB122 S2	6/14/01	4	0.8	--	<5.0	NA	<25	<25	<25	<75	<25	<25	<25
GB122 S4	6/14/01	8	0.8	--	<5.7	NA	NA	NA	NA	NA	NA	NA	NA
GB123 S2	6/14/01	4	0.8	--	<6.5	NA	<33	<33	<33	<98	<33	<33	<33
GB123 S4	6/14/01	8	0.8	--	<6.2	NA	NA	NA	NA	NA	NA	NA	NA

Table C-1 (Continued)
DRO, GRO, and PVOC Concentrations in Soil

Sample	Date	Depth (feet)	PID	Lab Notes	DRO (mg/kg)	GRO (mg/kg)	Benzene	Ethylbenzene	Toluene	Xylenes	1,2,4-TMB	1,3,5-TMB	MTBE
GB124 S2	6/14/01	4	10	(1)	**130**	NA	**292**	358	45	186	212	33	<33
GB124 S4	6/14/01	8	0.8	--	<5.9	NA	NA	NA	NA	NA	NA	NA	NA
GB125 S2	6/14/01	4	0.8	--	**110**	NA	**65**	285	298	570	130	<32	<32
GB125 S4	6/14/01	8	0	--	86	NA	NA	NA	NA	NA	NA	NA	NA
GB126 S2	6/14/04	4	120	(2)	**13,100**	NA	<594	1,190	<594	<1,780	903	<594	<594
GB126 S4	6/14/01	8	78	--	**12,900**	NA	NA	NA	NA	NA	NA	NA	NA
GB127 S1	6/14/01	2	0	(1)	68	NA	<32	<32	<32	<96	<32	<32	<32
GB127 S4	6/14/01	7.5	0	--	79	NA	NA	NA	NA	NA	NA	NA	NA
GB128 S1	6/15/01	1	1.3	(5)	**516**	NA	**70**	251	212	357	265	66	<33
GB128 S4	6/15/01	8	1.3	(6)	<5.9	NA	NA	NA	NA	NA	NA	NA	NA
GB129 S2	6/15/01	4	2.2	(6)	<8.9	NA	<45	<45	<45	<130	<45	<45	<45
GB129 S4	6/15/01	8	2.2	(6)	<6.1	NA	NA	NA	NA	NA	NA	NA	NA
GB130 S2	6/15/01	4	2.2	(7)	**4,540**	NA	**58**	71	57	100	45	<32	<32
GB130 S4	6/15/01	8	1.3	(6)	12	NA	NA	NA	NA	NA	NA	NA	NA
GB131 S2	6/15/01	4	0.8	7	**160**	NA	<29	110	33	94	50	<29	<29
GB131 S4	6/15/01	8	2.2	(6)	58	NA	NA	NA	NA	NA	NA	NA	NA
B132 S1	8/13/01	2	0.6	--	**388**	6.7	**52**	110	<32	155	100	41	44
B133 S1	8/13/01	3	8	(4)	**2,640**	7.4	<29	39	32	161	97	<29	<29
B134 S1	8/13/01	3	14	(8)	**609**	67	**60**	<31	35	634	<31	186	<31
B135 S1	8/13/01	3	327	(1)	**255**	**267**	**911**	729	960	1,460	583	<304	<304
MW10 S1	8/13/01	3	0.6	--	<6.4	<6.4	<32	<32	<32	<96	<32	<32	<32
MW12 S1	8/13/01	3	15	--	**649**	**169**	<32	43	<32	<97	480	<52	<32
MW15 S3	8/14/01	8	0.6	--	<7.9	<7.9	<39	<39	<39	<120	<39	<39	<39

Table C-1 (Continued)
DRO, GRO, and PVOC Concentrations in Soil

Sample	Date	Depth (feet)	PID	Lab Notes	DRO (mg/kg)	GRO (mg/kg)	Benzene	Ethylbenzene	Toluene	Xylenes	1,2,4-TMB	1,3,5-TMB	MTBE
MW16 S3	8/14/01	8	0.6	--	<6.8	<6.8	<34	<34	<34	<100	<34	<34	<34
MeOH Blank	6/12/01	--	--	--	NA	NA	<25	<25	<25	<75	<25	<25	<25
	6/14/01	--	--	--	NA	NA	<25	<25	<25	<75	<25	<25	<25
	6/15/01	--	--	--	NA	NA	<25	<25	<25	<75	<25	<25	<25
	8/13/01	--	--	--	NA	<5.0	<25	<25	<25	<75	<25	<25	<25
	8/14/01	--	--	--	NA	<5.0	<25	<25	<25	<75	<25	<25	<25
NR 720 Generic Soil Cleanup Standards					100	100	5.5	2,900	1,500	4,100	NE	NE	NE
NR 746 Table 1 - Indicators of residual petroleum product in soil pores					NE	NE	8,500	4,600	38,000	42,000	83,000	11,000	NE
NR 746 Table 2 - Protection of human health from direct contact with contaminated soil					NE	NE	1,100	NE	NE	NE	NE	NE	NE

ABBREVIATIONS:
AST = Aboveground Storage Tank
TMB = Trimethylbenzene
PID = Photo-ionization Detector
MTBE = Methyl-tert-butyl ether
DRO = Diesel Range Organics
NA = Not Analyzed
GRO = Gasoline Range Organics
NE = No Standard Established

NOTE:
Bold values exceed NR 720 generic soil cleanup standards.

LABORATORY NOTES:
(1) DRO analysis - Late eluting hydrocarbons present.
(2) PVOCs analysis - Late eluting hydrocarbons present.
(3) DRO analysis - Improperly handled sample.
(4) PVOCs and DRO analyses - Late eluting hydrocarbons present.
(5) DRO and GRO analyses - Late eluting hydrocarbons present. DRO analysis - Received past hold time; this sample was extracted more than three days after sample collection. WDNR has extended the hold time for extraction to 10 days, but this has not yet been Codified.
(6) DRO analysis - Received past hold time; this sample was extracted more than three days after sample collection. WDNR has extended the hold time for extraction to 10 days, but this has not yet been Codified.
(7) PVOCs analysis - Late eluting hydrocarbons present. DRO analysis - Received past hold time; this sample was extracted more than three days after sample collection. WDNR has extended the hold time for extraction to 10 days, but this has not yet been Codified.
(8) PVOCs analysis - Late eluting hydrocarbons present and does not match typical pattern.

By: LH Date: 7/12/01
Rev. By: LH Date: 8/31/01
Checked: JM Date: 7/16/01
I:\1624\Tables-General\Tables.wpd

Table C-2
PAH Concentrations in Soil
Hartmeyer AST Area / Project #1624
(results in µg/kg)

Compound	Sample Name, Depth (feet), and Date																		Generic Residual Contaminant Levels[a]	
	GB102 S1 2' 6/12/01	GB104 S1 1' 6/12/01	GB106 S2 4' 6/12/01	GB108 S1 1' 6/12/01	GB113 S2 4' 6/13/01	GB117 S2 4' 6/13/01	GB121 S2 4' 6/14/01	GB124 S2 4' 6/14/01	GB126 S2 4' 6/14/01	GB127 S1 2' 6/14/01	B132 S1 2' 8/13/01	B133 S1 3' 8/13/01	B134 S1 3' 8/13/01	B135 S1 3' 8/13/01	MW10 S1 3' 8/13/01	MW12 S1 3' 8/13/01	MW15 S3 8' 8/14/01	MW16 S3 8' 8/14/01	Groundwater Pathway	Direct Contact Pathway - Industrial
	Note (1)	--	--	--	--	Note (1)	Note (2)	Note (1)	Note (1)	--	--	Note (1)	Note (1)	Note (1)	--	--	--	--	--	--
Acenaphthene	<1,800	<64	<1,300	<64	<58	1,880	125	1,030	<4,400	<64	<65	<570	<620	<610	<64	<650	<79	<68	38,000	60,000,000
Acenaphthylene	<3,100	<110	<2,200	<110	<98	<2,200	<110	<1,100	<7,500	<110	<110	<980	<1,100	<1,000	<110	<1,100	<130	<120	700	360,000
Anthracene	775	<6.4	503	17	8.7	2,000	138	1,590	3,560	<6.4	13	448	68	<61	<6.4	130	<7.9	<6.8	3,000,000	300,000,000
Benzo(a)anthracene	1,480	<6.4	1,040	120	18	2,250	238	1,990	**6,290**	19	93	966	348	134	19	350	<7.9	<6.8	17,000	3,900
Benzo(a)pyrene	**1,220**	27	**966**	40	23	<130	<6.3	**1,300**	<440	12	142	**621**	**398**	170	19	**467**	<7.9	<6.8	48,000	390
Benzo(b)fluoranthene	849	24	675	31	15	<130	<6.3	928	<440	9.7	7.2	471	373	85	14	337	<7.9	<6.8	360,000	3,900
Benzo(g,h,i)perylene	1,510	43	1,300	14	15	<130	<6.3	570	<440	7.7	168	379	422	170	18	480	<7.9	<6.8	6,800,000	39,000
Benzo(k)fluoranthene	443	8.5	331	13	7.3	<130	<6.3	451	<440	11	26	207	110	<61	<6.4	91	<7.9	<6.8	870,000	39,000
Chrysene	1,140	17	728	28	17	<130	6.8	1,150	2,490	7.3	54	517	360	72	19	169	<7.9	<6.8	37,000	390,000
Dibenzo(a,h)anthracene	<280	<9.5	<200	<9.6	<8.7	<190	<9.4	133	<670	<9.6	38	<86	<93	<91	<9.6	<97	<12	<10	38,000	390
Fluoranthene	4,430	20	2,650	166	60	10,600	714	6,100	13,100	50	87	2,870	932	389	52	895	<16	<14	500,000	40,000,000
Fluorene	<370	<13	<260	<13	<12	6,510	388	2,120	14,300	<13	<13	<110	<120	<120	<13	<130	<16	<14	100,000	40,000,000
Indeno(1,2,3-cd)pyrene	923	37	873	24	16	<125	<6.3	862	<451	13	72	402	323	120	14	350	<7.9	<6.8	680,000	3,900
1-Methylnaphthalene	<1,100	<38	<800	205	<35	36,300	1,880	5,700	<2,700	<38	181	<340	<370	<360	<38	<390	<47	<41	23,000	70,000,000
2-Methylnaphthalene	3,280	<32	<660	473	<29	75,100	1,050	2,390	<2,200	<32	440	885	<310	<300	<32	<320	<39	<34	20,000	40,000,000
Naphthalene	<1,100	<38	<800	97	<35	18,800	201	1,260	<2,700	<38	207	<340	<370	<360	<38	<390	<47	<41	400	110,000
Phenanthrene	2,400	13	1,980	141	29	13,800	815	7,030	23,800	22	168	1,260	360	243	27	298	<7.9	<6.8	1,800	390,000
Pyrene	2,920	<6.4	2,380	68	48	6,880	263	1,990	21,400	13	110	2,070	957	219	55	947	<7.9	<6.8	8,700,000	30,000,000

ABBREVIATIONS:
AST = Aboveground Storage Tank PAH = Polynuclear aromatic hydrocarbons

NOTE:
(a) PAH Soil Generic Residual Contaminant Levels (RCLs) (Interim Guidance - April 1997)
Bold values exceed generic RCLs for the direct contact pathway for industrial sites.
Underlined values exceed generic RCLs for the groundwater pathway.

LABORATORY NOTES:
(1) PNA analysis - Matrix interference.
(2) Anthracene, benzo(a)anthracene, chrysene, fluoranthene, fluorene, 1-methylnaphthalene, 2-methylnaphthalene, naphthalene, phenanthrene, and pyrene analyses - Matrix interference.

By: LH Date: 8/11/01
Rev. By: LH Date: 8/31/01
Checked: JM Date: 7/16/01

I:\1624\Tables-General\Tables.wpd

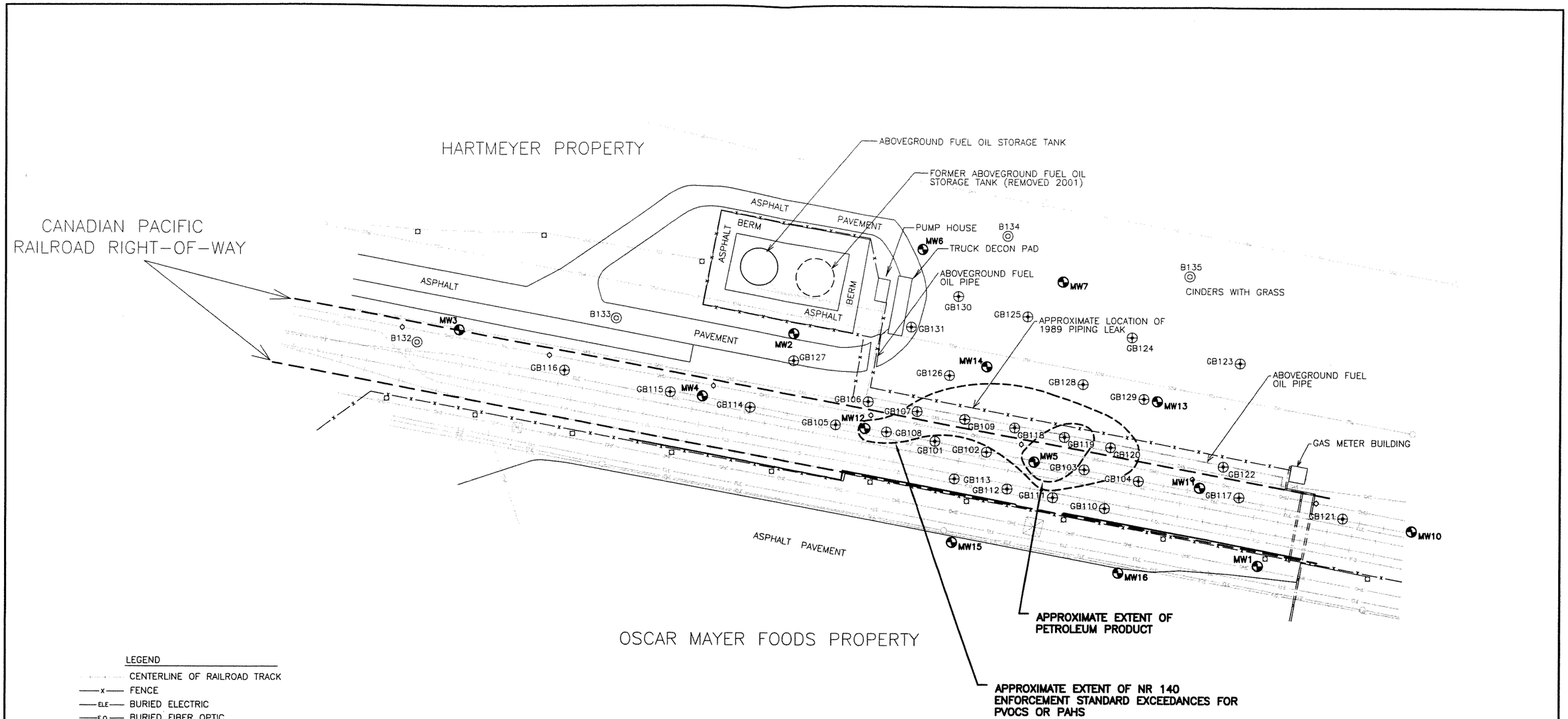

LEGEND

- CENTERLINE OF RAILROAD TRACK
- FENCE
- BURIED ELECTRIC
- BURIED FIBER OPTIC
- GAS MAIN
- BURIED TELEPHONE
- OVERHEAD ELECTRIC
- OVERHEAD UTILITY
- SANITARY SEWER
- STORM SEWER
- LIGHT POLE WITH CONCRETE BASE
- POWER POLE
- MANHOLE OR CATCH BASIN
- ELECTRIC TRANSMISSION TOWER
- RAILROAD PROPERTY LINE
- MONITORING WELL
- GEOPROBE BORING
- SOIL BORING
- PVOC PETROLEUM VOLATILE ORGANIC COMPOUNDS
- PAH POLYNUCLEAR AROMATIC HYDROCARBON COMPOUNDS

NOTES:

1. MAP ADAPTED FROM SITE SURVEY MAP BY NOTBOHM SURVEYING, OCTOBER, 2000.
2. FUEL RELEASE LOCATION OBTAINED FROM DAMES AND MOORE PRELIMINARY SITE ASSESSMENT REPORT DATED MAY, 1989.
3. DAMES AND MOORE INSTALLED MW1–MW5 DURING 1989 AND MW6–MW7 DURING 1992.
4. GEOPROBE BORINGS INSTALLED BY BT2, INC. DURING JUNE 12–15, 2001.
5. SOIL BORINGS B132–B135 AND MONITORING WELLS MW10–MW16 INSTALLED BY BT2 INC. DURING AUGUST 13–14, 2001.

N

100 0 100

SCALE: 1" = 100'

FIGURE E-7
APPROXIMATE EXTENT OF NR 140 ENFORCEMENT STANDARD EXCEEDANCES AND PETROLEUM PRODUCT
HARTMEYER AST AREA
2007 ROTH STREET
MADISON, WISCONSIN

PROJECT NO. 1624	
DRAWN BY: CS	
CHECKED BY: JM	
DRAWN: 02/07/03	
REVISED: 01/28/04	

BT2 inc.

I:\1624\Figures-General\survey\EXTENTS.dwg, 8/29/2006 9:42:53 AM

Table E-10
Water Level Summary Table
Hartmeyer AST Area / Project #1624

Raw Data		Depth to Water in feet below top of well casing													
		MW1	MW2	MW3	MW4	MW5 *	MW6	MW7	MW10	MW11	MW12	MW13	MW14	MW15	MW16
Measurement Date															
31-Aug-99			9.17	6.93	4.26	5.01	10.40	11.39							
06-Sep-01	(2)	11.60	7.90	5.68	3.82	5.81	8.90	10.31	6.91	6.00	4.00	5.88	5.05	7.07	8.72
19-Dec-01		11.56	7.97	5.73	3.58	1.47	8.88	10.24	6.82	5.93	3.63	5.81	3.88	6.76	8.70
23-Apr-02	(3)	10.51	6.58	4.83	2.76	3.86	7.81	9.14	5.70	4.81	2.22	4.68	2.25	6.07	7.67
22-Jul-02		11.29	8.13	5.93	3.98	4.96	8.90	10.20	6.59	5.74	3.73	5.69	5.59	7.16	8.52
27-Sep-02		12.36	8.97	6.74	6.72	5.89	9.88	11.14	7.60	6.78	5.23	6.68	7.05	8.24	9.54
17-Dec-02		12.47	9.23	6.99	5.10	6.02	10.08	11.27	7.85	6.88	4.83	6.80	7.21	8.45	9.62
24-Mar-03		12.75	9.50	7.28	5.00	6.27	10.18	11.56	7.73	7.14	4.61	7.06	7.65	8.76	9.95
09-Jun-03		11.32	7.86	5.91	3.94	4.91	8.89	10.13	6.63	5.76	3.61	5.64	3.11	7.02	8.46
15-Sep-03		11.35	8.04	6.07	4.68	5.03	8.83	10.41	4.75	5.63	3.25	5.79	3.28	7.54	8.64

		Ground Water Elevation in feet above mean sea level (amsl)													
Well Number		MW1	MW2	MW3	MW4	MW5 *	MW6	MW7	MW10	MW11	MW12	MW13	MW14	MW15	MW16
Top of Casing Elevation (feet amsl)	(1)	858.34	855.14	852.74	851.42	851.92	855.96	857.05	853.70	852.74	851.79	852.59	853.30	854.40	855.57
Measurement Date															
31-Aug-99			845.97	845.81	847.16	846.91	845.56	845.66							
06-Sep-01	(2)	846.74	847.24	847.06	847.60	846.11	847.06	846.74	846.79	846.74	847.79	846.71	848.25	847.33	846.85
19-Dec-01		846.78	847.17	847.01	847.84	850.45	847.08	846.81	846.88	846.81	848.16	846.78	849.42	847.64	846.87
23-Apr-02	(3)	847.83	848.56	847.91	848.66	848.06	848.15	847.91	848.00	847.93	849.57	847.91	851.05	848.33	847.90
22-Jul-02		847.05	847.01	846.81	847.44	846.96	847.06	846.85	847.11	847.00	848.06	846.90	847.71	847.24	847.05
27-Sep-02		845.98	846.17	846.00	844.70	846.03	846.08	845.91	846.10	845.96	846.56	845.91	846.25	846.16	846.03
17-Dec-02		845.87	845.91	845.75	846.32	845.90	845.88	845.78	845.85	845.86	846.96	845.79	846.09	845.95	845.95
24-Mar-03		845.59	845.64	845.46	846.42	845.65	845.78	845.49	845.97	845.60	847.18	845.53	845.65	845.64	845.62
09-Jun-03		847.02	847.28	846.83	847.48	847.01	847.07	846.92	847.07	846.98	848.18	846.95	850.19	847.38	847.11
15-Sep-03		846.99	847.10	846.67	846.74	846.89	847.13	846.64	848.95	847.11	848.54	846.80	850.02	846.86	846.93

Table E-10 (Continued)
Water Level Summary Table
Hartmeyer AST Area / Project #1624

		Depth to Water in feet below top of well casing													
Raw Data		**MW1**	**MW2**	**MW3**	**MW4**	**MW5 ***	**MW6**	**MW7**	**MW10**	**MW11**	**MW12**	**MW13**	**MW14**	**MW15**	**MW16**
Measurement Date															
08-Mar-04		9.61	6.17	4.61	2.46	3.06	6.61	8.39	3.9	3.8	1.84	3.82	2.28	5.68	6.93
18-Jun-04		8.25	4.71	3.20	1.67	1.97	5.43	7.12	3.03	2.52	0.61	2.45	1.21	4.27	5.64
28-Sep-04		10.33	7.30	5.47	3.55	4.03	7.99	9.29	5.51	4.77	2.65	4.68	3.55	5.71	7.62
16-Dec-04		9.78	6.56	4.83	2.60	3.32	7.19	8.59	4.78	4.11	2.15	4.00	2.60	5.52	7.09
08-Mar-05		9.36	6.46	4.61	2.15	3.85	6.45	8.29	4.03	3.70	1.71	3.70	2.85	5.55	6.72
28-Jun-05		10.26	3.20	5.44	3.49	3.97	7.89	9.24	5.46	4.69	2.92	4.60	3.51	5.61	7.52
09-Sep-05		11.44	8.45	6.54	4.66	5.36	9.07	10.38	6.64	5.86	4.19	5.78	5.47	6.99	8.68
02-Dec-05		11.19	7.93	6.15	4.05	4.60	8.62	10.03	6.32	5.55	3.95	5.41	3.78	7.08	8.42
20-Mar-06		9.57	5.65	4.72	2.16	3.13	6.67	8.45	4.42	3.86	2.25	3.78	1.86	5.63	6.88
21-Jun-06		9.49	5.90	4.71	2.73	3.13	7.08	8.49	4.62	3.91	2.04	3.85	2.88	5.40	6.76

		Ground Water Elevation in feet above mean sea level (amsl)													
Well Number		**MW1**	**MW2**	**MW3**	**MW4**	**MW5 ***	**MW6**	**MW7**	**MW10**	**MW11**	**MW12**	**MW13**	**MW14**	**MW15**	**MW16**
Top of Casing Elevation (feet amsl)	(1)	858.34	855.14	852.74	851.42	851.92	855.96	857.05	853.70	852.74	851.79	852.59	853.30	854.40	855.57
Measurement Date															
08-Mar-04		848.73	848.97	848.13	848.96	848.86	849.35	848.66	849.80	848.94	849.95	848.77	851.02	848.72	848.64
18-Jun-04		850.09	850.43	849.54	849.75	849.95	850.53	849.93	850.67	850.22	851.18	850.14	852.09	850.13	849.93
28-Sep-04		848.01	847.84	847.27	847.87	847.89	847.97	847.76	848.19	847.97	849.14	847.91	849.75	848.69	847.95
16-Dec-04		848.56	848.58	847.91	848.82	848.60	848.77	848.46	848.92	848.63	849.64	848.59	850.70	848.88	848.48
08-Mar-05		848.98	848.68	848.13	849.27	848.07	849.51	848.76	849.67	849.04	850.08	848.89	850.45	848.85	848.85
28-Jun-05		848.08	851.94	847.30	847.93	847.95	848.07	847.81	848.24	848.05	848.87	847.99	849.79	848.79	848.05
09-Sep-05		846.90	846.69	846.20	846.76	846.56	846.89	846.67	847.06	846.88	847.60	846.81	847.83	847.41	846.89
02-Dec-05		847.15	847.21	846.59	847.37	847.32	847.34	847.02	847.38	847.19	847.84	847.18	849.52	847.32	847.15
20-Mar-06		848.77	849.49	848.02	849.26	848.79	849.29	848.60	849.28	848.88	849.54	848.81	851.44	848.77	848.69
21-Jun-06		848.85	849.24	848.03	848.69	848.79	848.88	848.56	849.08	848.83	849.75	848.74	850.42	849.00	848.81

ABBREVIATIONS:

NM = not measured

NOTES:

* Depth to Water and Ground Water Elevation for MW5 were corrected for the petroleum product floating in the well.

(1) Survey of the monitoring wells was performed on October 3, 2001, by Kieth Notbohm Land Surveying, Inc.

(2) Water levels for wells MW5, MW12, and MW14 were measured on September 7, 2001.

(3) The depth to water and product at MW5 was measured on April 24, 2002. The depth to water at all other wells was measured on April 23, 2002.

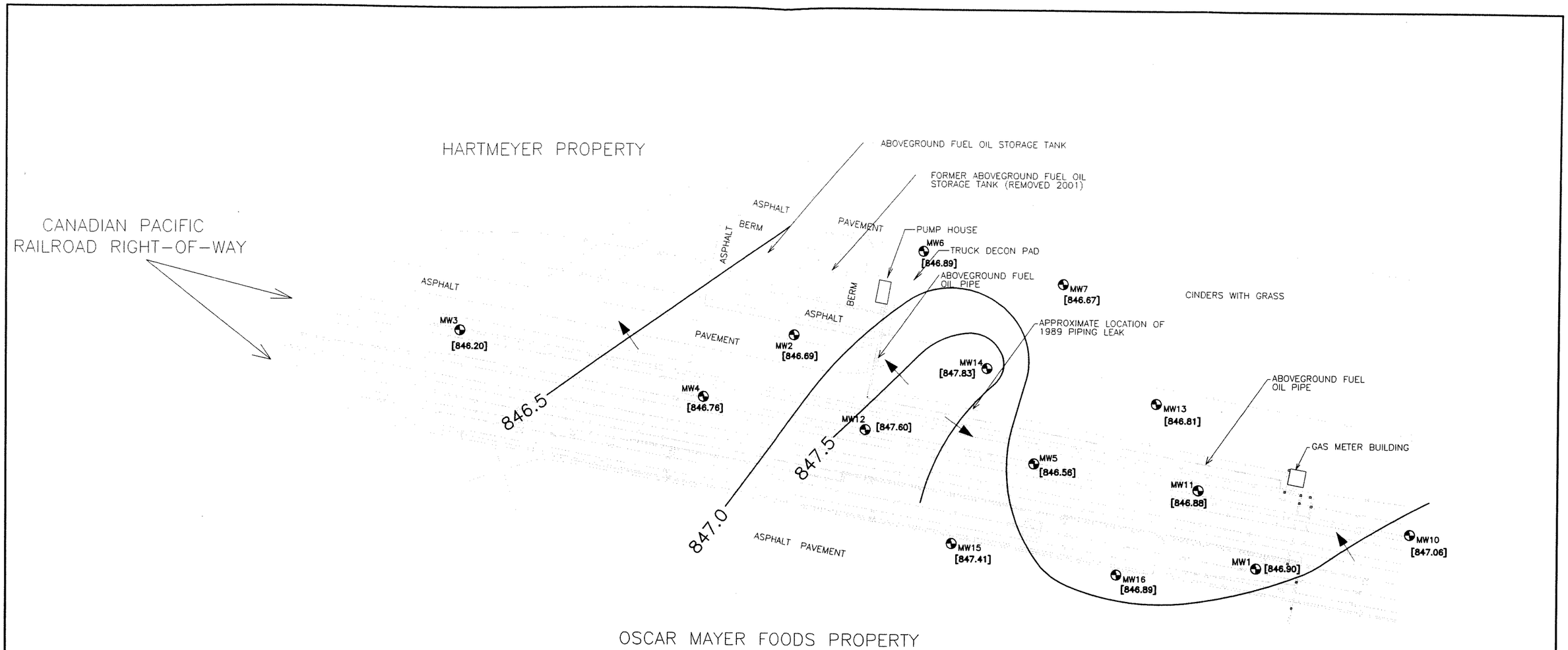

LEGEND

- CENTERLINE OF RAILROAD TRACK
- —x— FENCE
- —ELE— BURIED ELECTRIC
- —F.O.— BURIED FIBER OPTIC
- —GAS— GAS MAIN
- —TEL— BURIED TELEPHONE
- —OHE— OVERHEAD ELECTRIC
- —OHU— OVERHEAD UTILITY
- —SAN— SANITARY SEWER
- —STM— STORM SEWER
- LIGHT POLE WITH CONCRETE BASE
- POWER POLE
- MANHOLE OR CATCH BASIN
- ELECTRIC TRANSMISSION TOWER
- RAILROAD PROPERTY LINE
- MONITORING WELL
- [846.20] WATER LEVEL ELEVATION MEASURED ON SEPTEMBER 9, 2005
- —846.5— WATER LEVEL ELEVATION CONTOUR (FEET ABOVE MEAN SEA LEVEL)

NOTES:

1. MAP ADAPTED FROM SITE SURVEY MAP BY NOTBOHM SURVEYING, OCTOBER, 2000.
2. FUEL RELEASE LOCATION OBTAINED FROM DAMES AND MOORE PRELIMINARY SITE ASSESSMENT REPORT DATED MAY, 1989.
3. DAMES AND MOORE INSTALLED MW1–MW5 DURING 1989 AND MW6–MW7 DURING 1992.
4. GEOPROBE BORINGS INSTALLED BY BT2, INC. DURING JUNE 12–15, 2001.
5. SOIL BORINGS B132–B135 AND MONITORING WELLS MW10–MW16 INSTALLED BY BT2 INC. DURING AUGUST 13–14, 2001.
6. MW5 WATER LEVEL ELEVATION CORRECTED FOR 4.16 FEET OF MEASURED PRODUCT THICKNESS.

N

100 0 100

SCALE: 1" = 100'

FIGURE E–8
WATER TABLE MAP FOR SEPTEMBER 9, 2005
HARTMEYER AST AREA
2007 ROTH STREET
MADISON, WISCONSIN

PROJECT NO. 1624	
DRAWN BY: CS/WK	
CHECKED BY: JM	
DRAWN: 02/07/03	
REVISED: 08/18/06	

BT2 inc.

I:\1624\Figures-General\survey\WTBL-SEPT05.dwg, 8/22/2006 3:01:01 PM

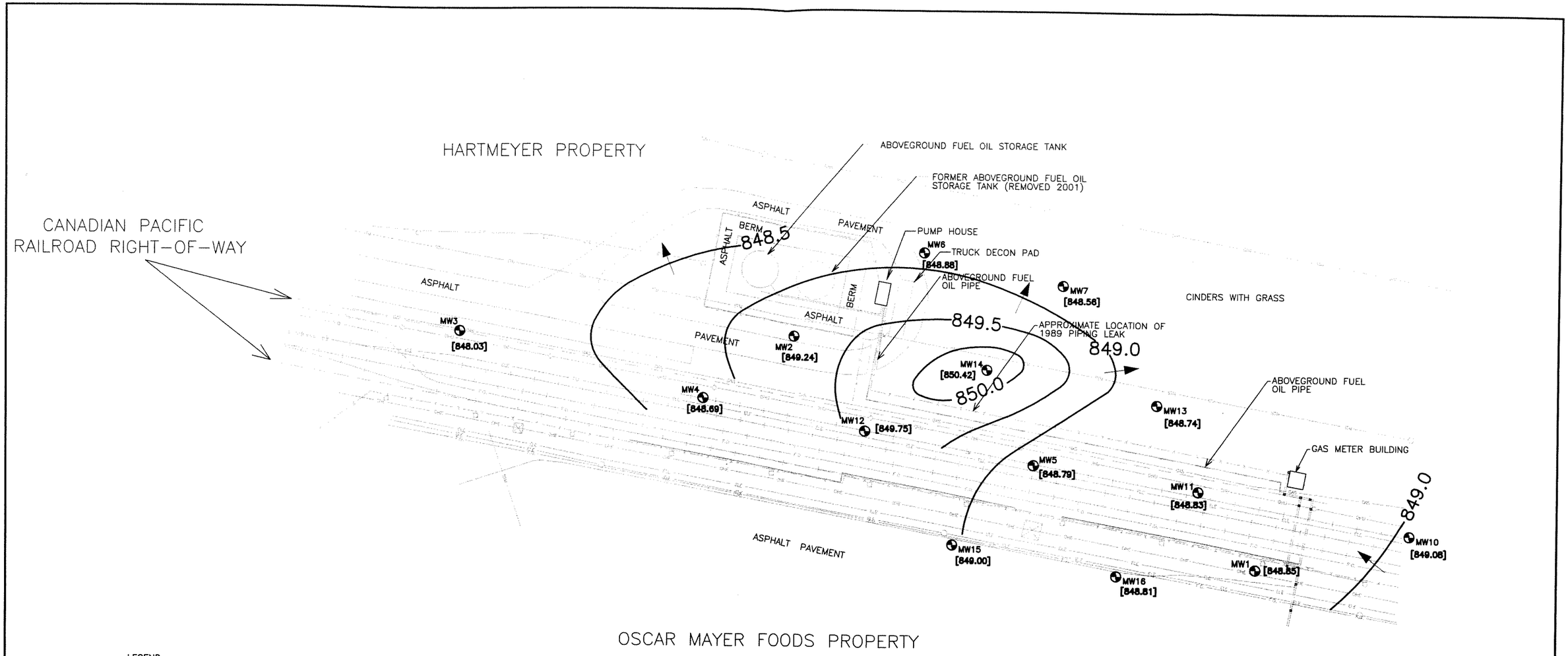

LEGEND

- CENTERLINE OF RAILROAD TRACK
- —x— FENCE
- —ELE— BURIED ELECTRIC
- —F.O.— BURIED FIBER OPTIC
- —GAS— GAS MAIN
- —TEL— BURIED TELEPHONE
- —OHE— OVERHEAD ELECTRIC
- —OHU— OVERHEAD UTILITY
- —SAN— SANITARY SEWER
- —STM— STORM SEWER
- LIGHT POLE WITH CONCRETE BASE
- POWER POLE
- MANHOLE OR CATCH BASIN
- ELECTRIC TRANSMISSION TOWER
- RAILROAD PROPERTY LINE
- MONITORING WELL
- [849.24] WATER LEVEL ELEVATION MEASURED ON JUNE 21, 2006
- —848.5— WATER LEVEL ELEVATION CONTOUR (FEET ABOVE MEAN SEA LEVEL)

NOTES:

1. MAP ADAPTED FROM SITE SURVEY MAP BY NOTBOHM SURVEYING, OCTOBER, 2000.
2. FUEL RELEASE LOCATION OBTAINED FROM DAMES AND MOORE PRELIMINARY SITE ASSESSMENT REPORT DATED MAY, 1989.
3. DAMES AND MOORE INSTALLED MW1–MW5 DURING 1989 AND MW6–MW7 DURING 1992.
4. GEOPROBE BORINGS INSTALLED BY BT2, INC. DURING JUNE 12–15, 2001.
5. SOIL BORINGS B132–B135 AND MONITORING WELLS MW10–MW16 INSTALLED BY BT2 INC. DURING AUGUST 13–14, 2001.
6. MW5 WATER LEVEL ELEVATION CORRECTED FOR 4.97 FEET OF MEASURED PRODUCT THICKNESS.

N

100 0 100

SCALE: 1" = 100'

FIGURE E-9
WATER TABLE MAP FOR JUNE 21, 2006
HARTMEYER AST AREA
2007 ROTH STREET
MADISON, WISCONSIN

PROJECT NO. 1624	
DRAWN BY: CS/WK	
CHECKED BY: JM	
DRAWN: 02/07/03	
REVISED: 08/29/06	

BT2 inc.

I:\1624\Figures-General\survey\WTBL-JUNE06.dwg, 8/29/2006 9:44:15 AM

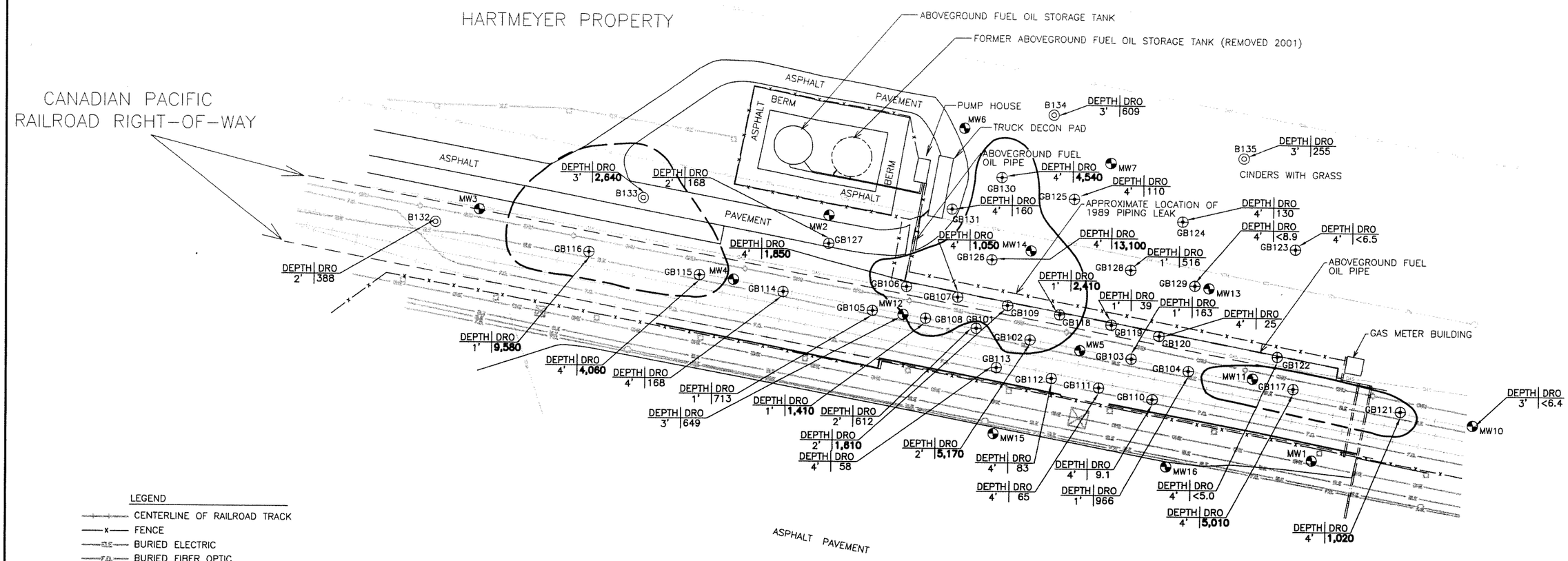

LEGEND

- CENTERLINE OF RAILROAD TRACK
- FENCE
- BURIED ELECTRIC
- BURIED FIBER OPTIC
- GAS MAIN
- BURIED TELEPHONE
- OVERHEAD ELECTRIC
- OVERHEAD UTILITY
- SANITARY SEWER
- STORM SEWER
- LIGHT POLE WITH CONCRETE BASE
- POWER POLE
- MANHOLE OR CATCH BASIN
- ELECTRIC TRANSMISSION TOWER
- RAILROAD PROPERTY LINE
- MONITORING WELL
- GEOPROBE BORING
- SOIL BORING
- DRO DIESEL RANGE ORGANIC COMPOUNDS (UNITS IN MG/KG)
- **BOLD** WHERE CONCENTRATIONS EXCEED 1,000 MG/KG

NOTES:

1. MAP ADAPTED FROM SITE SURVEY MAP BY NOTBOHM SURVEYING, OCTOBER, 2000.
2. FUEL RELEASE LOCATION OBTAINED FROM DAMES AND MOORE PRELIMINARY SITE ASSESSMENT REPORT DATED MAY, 1989.
3. DAMES AND MOORE INSTALLED MW1–MW5 DURING 1989 AND MW6–MW7 DURING 1992.
4. GEOPROBE BORINGS INSTALLED BY BT2, INC. DURING JUNE 12–15, 2001.
5. SOIL BORINGS B132–B135 AND MONITORING WELLS MW10–MW16 INSTALLED BY BT2 INC. DURING AUGUST 13–14, 2001.

N

100 0 100

SCALE: 1" = 100'

FIGURE C–4
AREAS WHERE DRO CONCENTRATIONS IN SHALLOW SOIL (<4')
EXCEED 1,000 MG/KG
HARTMEYER AST AREA
2007 ROTH STREET
MADISON, WISCONSIN

PROJECT NO. 1624	
DRAWN BY: FS/CS/WK	
CHECKED BY: JM	
DRAWN: 02/08/01	
REVISED: 08/29/06	

BT2 inc

I:\1624\Figures-General\DRO.dwg, 8/29/2006 9:24:21 AM

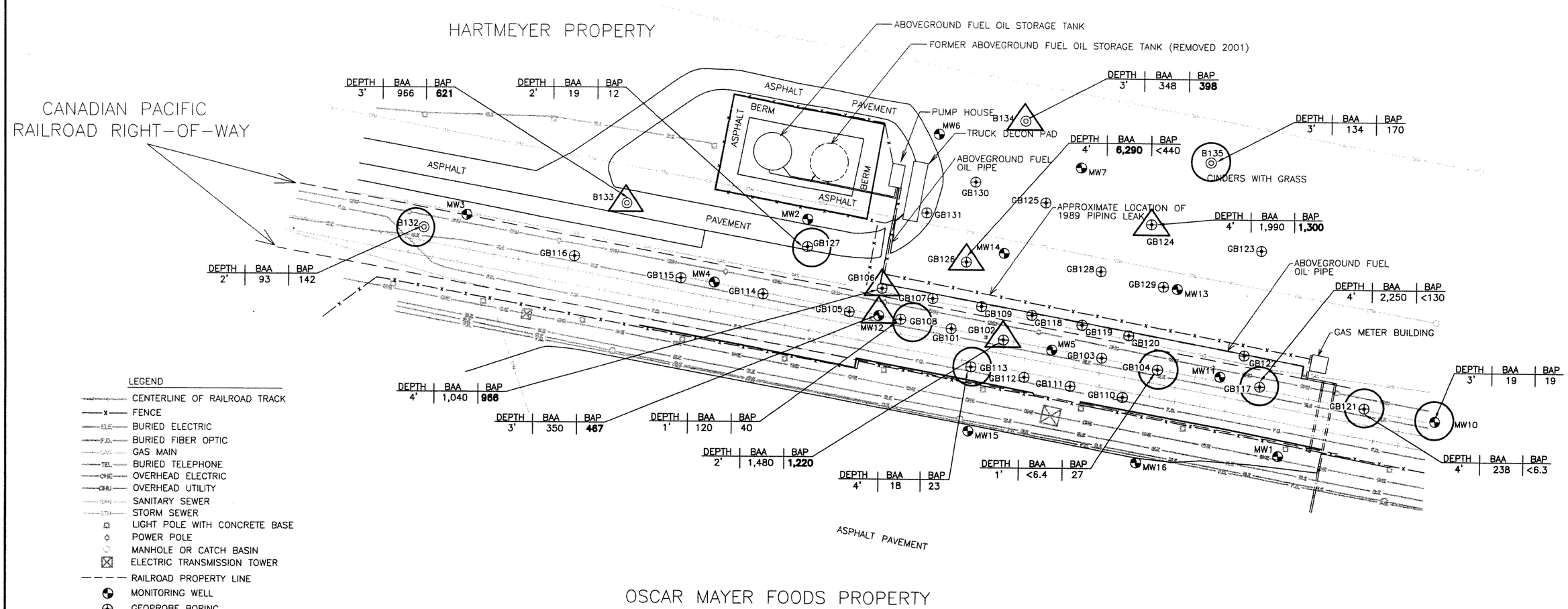

LEGEND

- CENTERLINE OF RAILROAD TRACK
- FENCE
- BURIED ELECTRIC
- BURIED FIBER OPTIC
- GAS MAIN
- BURIED TELEPHONE
- OVERHEAD ELECTRIC
- OVERHEAD UTILITY
- SANITARY SEWER
- STORM SEWER
- LIGHT POLE WITH CONCRETE BASE
- POWER POLE
- MANHOLE OR CATCH BASIN
- ELECTRIC TRANSMISSION TOWER
- RAILROAD PROPERTY LINE
- MONITORING WELL
- GEOPROBE BORING
- SOIL BORING

BAA BENZO(A)ANTHRACENE (UNITS IN UG/KG)

BAP BENZO(A)PYRENE (UNITS IN UG/KG)

BAP AND BAA VALUES IN SHALLOW SOIL (<4') DO NOT EXCEED GENERIC RESIDUAL CONTAMINANT LEVELS FOR THE DIRECT CONTACT PATHWAY FOR INDUSTRIAL SITES.

BAP OR BAA VALUE IN SHALLOW SOIL (<4') EXCEEDS GENERIC RESIDUAL CONTAMINANT LEVELS FOR THE DIRECT CONTACT PATHWAY FOR INDUSTRIAL SITES.

BOLD WHERE VALUE EXCEEDS GENERIC RESIDUAL CONTAMINANT LEVELS FOR THE DIRECT CONTACT PATHWAY FOR INDUSTRIAL SITES.

NOTES:

1. MAP ADAPTED FROM SITE SURVEY MAP BY NOTBOHM SURVEYING, OCTOBER, 2000.
2. FUEL RELEASE LOCATION OBTAINED FROM DAMES AND MOORE PRELIMINARY SITE ASSESSMENT REPORT DATED MAY, 1989.
3. DAMES AND MOORE INSTALLED MW1–MW5 DURING 1989 AND MW6–MW7 DURING 1992.
4. GEOPROBE BORINGS INSTALLED BY BT2, INC. DURING JUNE 12–15, 2001.
5. SOIL BORINGS B132–B135 AND MONITORING WELLS MW10–MW16 INSTALLED BY BT2 INC. DURING AUGUST 13–14, 2001.

N

100 0 100

SCALE: 1" = 100'

FIGURE C–5
BENZO(A)ANTHRACENE AND BENZO(A)PYRENE CONCENTRATIONS IN SHALLOW SOIL (≤4')
HARTMEYER AST AREA
2007 ROTH STREET
MADISON, WISCONSIN

PROJECT NO. 1624	
DRAWN BY: FS/CS/WK	
CHECKED BY: JM	
DRAWN: 02/08/01	
REVISED: 09/15/06	

BT2 inc

I:\1624\Figures-General\BENZO_CONCENTRATIONS.dwg, 9/15/2006 9:00:04 AM

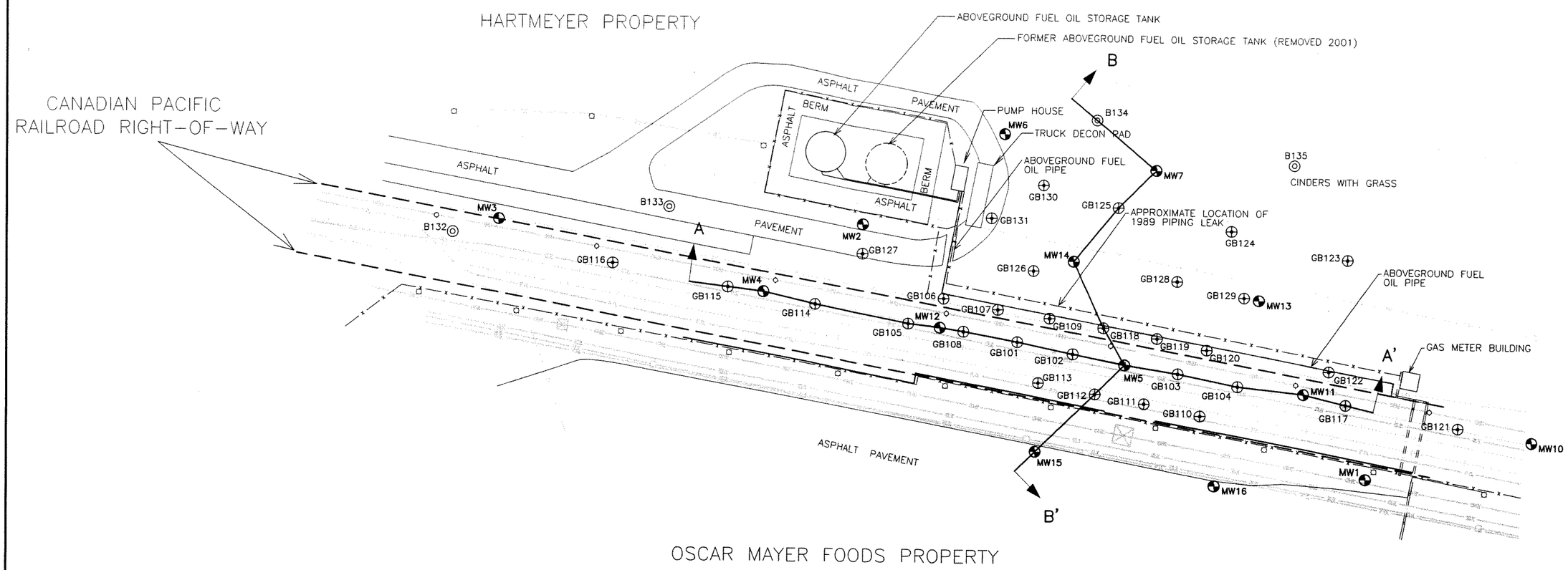

LEGEND

- CENTERLINE OF RAILROAD TRACK
- FENCE
- BURIED ELECTRIC
- BURIED FIBER OPTIC
- GAS MAIN
- BURIED TELEPHONE
- OVERHEAD ELECTRIC
- OVERHEAD UTILITY
- SANITARY SEWER
- STORM SEWER
- LIGHT POLE WITH CONCRETE BASE
- POWER POLE
- MANHOLE OR CATCH BASIN
- ELECTRIC TRANSMISSION TOWER
- RAILROAD PROPERTY LINE
- MONITORING WELL
- GEOPROBE BORING
- SOIL BORING

NOTES:

1. MAP ADAPTED FROM SITE SURVEY MAP BY NOTBOHM SURVEYING, OCTOBER, 2000.
2. FUEL RELEASE LOCATION OBTAINED FROM DAMES AND MOORE PRELIMINARY SITE ASSESSMENT REPORT DATED MAY, 1989.
3. DAMES AND MOORE INSTALLED MW1–MW5 DURING 1989 AND MW6–MW7 DURING 1992.
4. GEOPROBE BORINGS INSTALLED BY BT2, INC. DURING JUNE 12–15, 2001.
5. SOIL BORINGS B132–B135 AND MONITORING WELLS MW10–MW16 INSTALLED BY BT2 INC. DURING AUGUST 13–14, 2001.

N

100 0 100

SCALE: 1" = 100'

FIGURE C-7
CROSS SECTION LOCATION MAP
HARTMEYER AST AREA
2007 ROTH STREET
MADISON, WISCONSIN

PROJECT NO. 1624	
DRAWN BY: KP/CS/WK	
CHECKED BY: JM	
DRAWN: 05/06/02	
REVISED: 08/18/06	

BT2 inc.

I:\1624\Figures-General\survey\xsecloc.dwg, 8/22/2006 3:04:36 PM

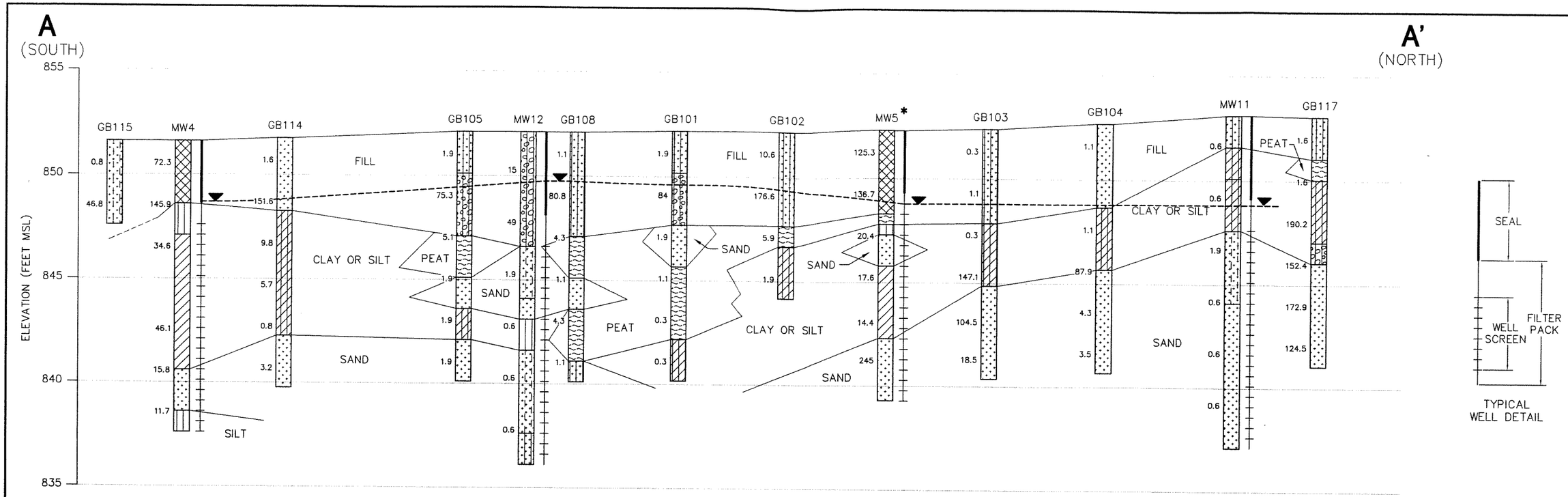

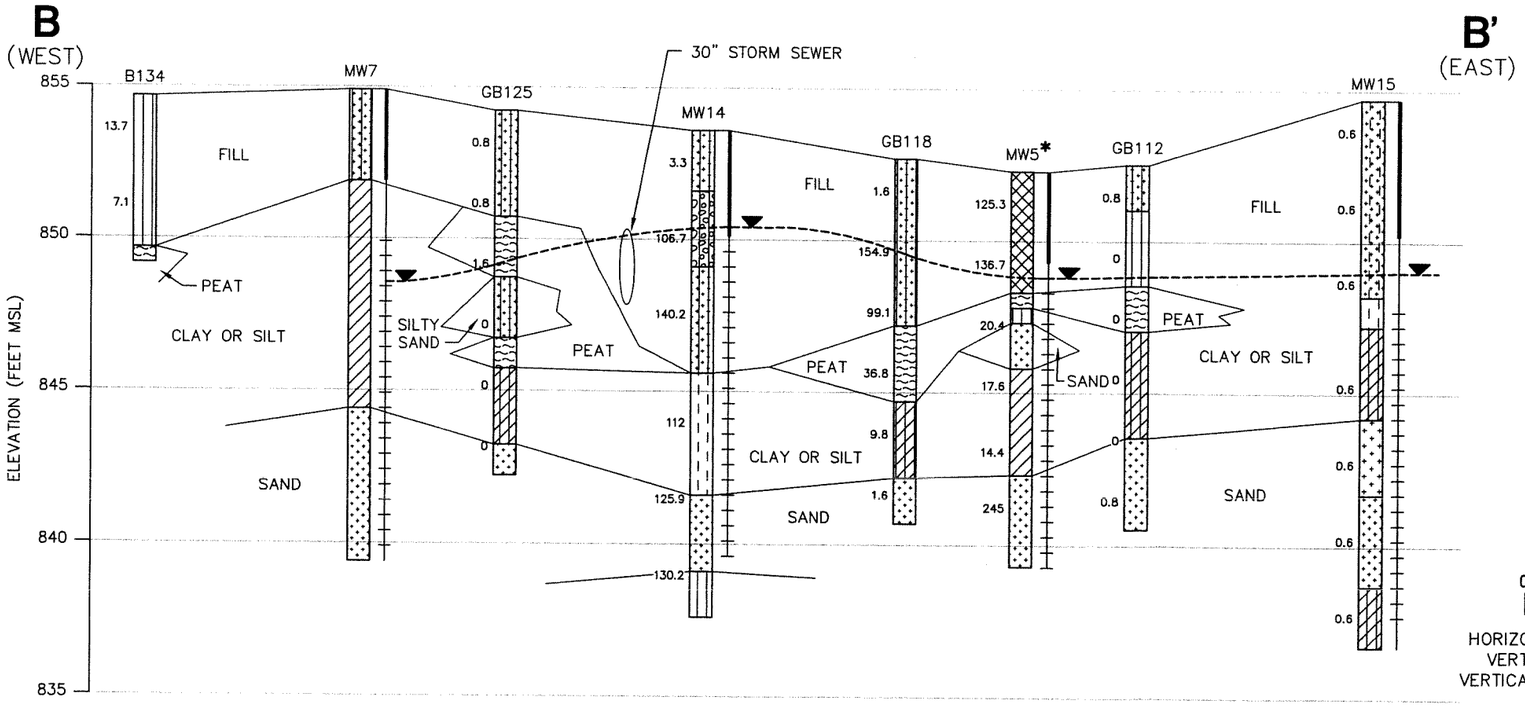

LEGEND

- FILL (CINDERS, COAL, FLY ASH, GRAVEL, SAND, OTHER)
- SAND, WELL GRADED, LITTLE OR NO FINES (SW).
- SAND, POORLY GRADED, LITTLE OR NO FINES (SP).
- SILT (ML).
- ORGAINIC SILT OR CLAY, LOW PLASTICITY (OL).
- LEAN CLAY, LOW PLASTICITY (CL).
- SILTY SAND (SM).
- SILTY GRAVEL (GM).
- SAND, POORLY GRADED WITH SILT FINES (SP-SM).
- SILTY CLAY (CL-ML).
- PEAT (PT).
- WATER TABLE ELEVATION MEASURED ON 06/21/06
- 25 PHOTO-IONIZATION DETECTOR READING
- * WATER LEVEL CORRECTED FOR PRODUCT THICKNESS

0 50

HORIZONTAL SCALE: 1" = 50'
VERTICAL SCALE: 1" = 5'
VERTICAL EXAGGERATION = 10X

FIGURE C-8
GEOLOGIC CROSS SECTIONS A-A' AND B-B'
HARTMEYER AST AREA
2007 ROTH STREET
MADISON, WISCONSIN

PROJECT NO. 1624	
DRAWN BY: KP/CS	
CHECKED BY: JM	
DRAWN: 05/06/02	
REVISED: 08/29/06	

BT² inc.

I:\1624\Figures-General\survey\XSECA.dwg, 8/29/2006 9:40:48 AM

Kraft Foods

October 23, 2006

To: Wisconsin Department of Natural Resources

Subject: Statement that all Legal Descriptions for Properties within the Contaminated Site Boundaries have been Included
Oscar Mayer Foods Division, Kraft Foods, Inc. (Kraft Foods Global, Inc.)
Hartmeyer AST Area
2007 Roth Street, Madison, WI 53704
BRRTS # 03-13-000053
BT^2 Project #1624

To Whom it May Concern:

To the best of my knowledge, I believe that with the submittal of the attached property information the legal description for each property within, or partially within the contaminated site boundary has been included with the closure request.

The attached property information includes the Deeds and Legal Descriptions for property located at 2007 Roth Street, Madison, Wisconsin.

If you need additional information, please contact me at (608) 285-6882.

Sincerely,

Mr. Robert Sherman
Associate Director, Environmental Affairs
Kraft Foods Global, Inc.

October 23, 2006

CERTIFIED MAIL WITH RETURN RECEIPT

John Hartmeyer Estate
c/o John Pike and J.R. Pike Corporation
433 Woodward Drive
Madison, WI 53704-1529

SUBJECT: Residual Soil and Ground Water, and Petroleum Product Contamination from Petroleum Aboveground Storage Tank System Release Hartmeyer Estate Property 2007 Roth Street, Madison, Wisconsin

Dear Hartmeyer Estate Members:

BT^2, Inc., has prepared this letter on behalf of Kraft Foods Global, Inc. (Kraft), to fulfill the requirements set forth in Wisconsin Administrative Code (WAC) chapter NR 726.05. Soil, groundwater, and petroleum product contamination remains near the east side of your property located at 2007 Roth Street in Madison, Wisconsin (see map in **Attachment A**). At one or more soil sampling locations, the concentrations of diesel range organic compounds (DRO), gasoline range organics (GRO), and/or benzene were greater than the NR 720 Wisconsin Administrative Code (WAC) residual contaminant levels (RCLs). At four soil sampling locations, the concentrations of one or more polynuclear aromatic hydrocarbon (PAH) compounds were greater than the generic RCLs listed in a WDNR interim guidance for PAH soil cleanup (publication RR-519-97). Residual petroleum product (fuel oil) has been observed on the water table at monitoring well MW5, located in the railroad right-of-way. The product likely extends beneath the eastern edge of the Hartmeyer Estate property.

Based on data collected in 2006 from the railroad right-of-way, the levels of benzene, chrysene, and naphthalene contamination in the groundwater on your property are greater than the state groundwater enforcement standards (ES) found in Chapter NR 140, WAC. However, we believe that the extent of petroleum product is not expanding, and that the groundwater contaminant plume is stable or receding and will eventually degrade over time. We believe that allowing natural attenuation to complete the cleanup at this site will meet the requirements for case closure that are found in Chapter NR 726, WAC, and we will be requesting that the Wisconsin Department of Natural Resources (WDNR) accept natural attenuation as the final remedy for this site and grant case closure. Closure means that the WDNR will not be requiring any further investigation or cleanup action to be taken, other than reliance on natural attenuation. An information fact sheet about natural attenuation is included in **Attachment B**.

The WDNR will not review the closure request for at least 30 days after the date of this letter. As an affected property owner, you have a right to contact the WDNR to provide any technical information that you may have that indicates that closure should not be granted for this site. If you would like to submit any information to the WDNR that is relevant to this closure request, you should mail that information to: Mr. Dino Tsoris, Wisconsin Department of Natural Resources, 3911 Fish Hatchery Road, Madison, WI, 53711.

If this case is closed, all properties within the site boundaries where groundwater contamination exceeds chapter NR 140, groundwater ES will be listed on the WDNR's Geographic Information System (GIS) Registry of Closed Remediation Sites. The information on the GIS Registry includes maps showing the location of properties in Wisconsin where groundwater contamination greater than chapter NR 140 ES found at the time that the case was closed. The GIS Registry is available to the general public on the WDNR's Internet Web site. If the WDNR grants case closure, a copy of the final closure letter is included in the GIS Registry.

The deed and legal description for your property will also be shown on the GIS Registry. Please review the enclosed legal description of your property (**Attachment C**), and notify us within the next 30 days if the legal description is incorrect.

Should you or any subsequent property owner wish to construct or reconstruct a well on your property, special well construction standards may be necessary to protect the well from the residual groundwater contamination. Any well driller who proposes to construct a well on your property in the future will first need to call the Diggers Hotline (1-800-242-8511) if your property is located outside of the service area of a municipally owned water system, or contact the Drinking Water program within the WDNR if your property is located within the designated service area of a municipally owned water system, to determine if there is a need for special well construction standards.

If you need more information, you may contact Rob Sherman at 910 Mayer Avenue, Madison, WI, 53704, phone: (608) 285-6882, or you may contact: Mr. Dino Tsoris, Wisconsin Department of Natural Resources, 3911 Fish Hatchery Road, Madison, WI, 53711, phone: (608) 275-3299.

Sincerely,
BT^2, Inc.

John B. Tweddale, P.G.
Principal, Hydrogeologist

Attachments:
A – Site Location and Site Area Maps
B – Natural Attenuation Fact Sheet
C – Property Deed and Legal Description for Hartmeyer Estate Property

cc: Mr. Rob Sherman, Kraft
Ms. Lisa Krogman, Environ

i:\1624\reports\closure request\hartmeyer_landowner_notification_gis_061023_let_ .doc