GIS REGISTRY
Cover Sheet

July, 2008
(RR 5367)

Source Property Information

CLOSURE DATE: Jun 25, 2009

BRRTS #: **03-49-000605**

FID #: 649085470

ACTIVITY NAME: YELLOW RIVER SUPPLY

DATCP #:

PROPERTY ADDRESS: 153 150TH AVE

COMM #: 54889999977

MUNICIPALITY: BEAVER

PARCEL ID #: 008-00409-0000

***WTM COORDINATES:**

X: **348771** Y: **552515**

** Coordinates are in WTM83, NAD83 (1991)*

WTM COORDINATES REPRESENT:

- (●) Approximate Center Of Contaminant Source
- ( ) Approximate Source Parcel Center

Please check as appropriate: (BRRTS Action Code)

Contaminated Media:

- [x] Groundwater Contamination > ES *(236)*
  - [x] Contamination in ROW
  - [ ] Off-Source Contamination

  *(**note:** for list of off-source properties see "Impacted Off-Source Property")*

- [x] Soil Contamination > *RCL or **SSRCL *(232)*
  - [ ] Contamination in ROW
  - [ ] Off-Source Contamination

  *(**note:** for list of off-source properties see "Impacted Off-Source Property")*

Land Use Controls:

- [ ] Soil: maintain industrial zoning *(220)*

  *(**note:** soil contamination concentrations between residential and industrial levels)*
- [ ] Structural Impediment *(224)*
- [ ] Site Specific Condition *(228)*
- [ ] Cover or Barrier *(222)*

  *(**note:** maintenance plan for groundwater or direct contact)*
- [ ] Vapor Mitigation *(226)*
- [ ] Maintain Liability Exemption *(230)*

  *(**note:** local government or economic development corporation)*

Monitoring wells properly abandoned? *(234)*

(●) Yes ( ) No ( ) N/A

** Residual Contaminant Level*
***Site Specific Residual Contaminant Level*

GIS Registry Checklist

This Adobe Fillable form is intended to provide a list of information that is required for evaluation for case closure. It is to be used in conjunction with Form 4400-202, Case Closure Request. The closure of a case means that the Department has determined that no further response is required at that time based on the information that has been submitted to the Department.

NOTICE: Completion of this form is mandatory for applications for case closure pursuant to ch. 292, Wis. Stats. and ch. NR 726, Wis. Adm. Code, including cases closed under ch. NR 746 and ch. NR 726. The Department will not consider, or act upon your application, unless all applicable sections are completed on this form and the closure fee and any other applicable fees, required under ch. NR 749, Wis. Adm. Code, Table 1 are included. It is not the Department's intention to use any personally identifiable information from this form for any purpose other than reviewing closure requests and determining the need for additional response action. The Department may provide this information to requesters as required by Wisconsin's Open Records law [ss. 19.31 - 19.39, Wis. Stats.].

BRRTS #: 03-49-000605 PARCEL ID #: 008-00409-0000

ACTIVITY NAME: YELLOW RIVER SUPPLY WTM COORDINATES: X: 348771 Y: 552515

CLOSURE DOCUMENTS (the Department adds these items to the final GIS packet for posting on the Registry)

- [x] **Closure Letter**
- [ ] **Maintenance Plan** (*if activity is closed with a land use limitation or condition (land use control) under s. 292.12, Wis. Stats.*)
- [x] **Conditional Closure Letter**
- [ ] **Certificate of Completion (COC)** for VPLE sites

SOURCE LEGAL DOCUMENTS

- [x] **Deed:** The most recent deed as well as legal descriptions, for the **Source Property** (where the contamination originated). Deeds for other, off-source (off-site) properties are located in the **Notification** section.
  Note: *If a property has been purchased with a land contract and the purchaser has not yet received a deed, a copy of the land contract which includes the legal description shall be submitted instead of the most recent deed. If the property has been inherited, written documentation of the property transfer should be submitted along with the most recent deed.*
- [x] **Certified Survey Map:** A copy of the certified survey map or the relevant section of the recorded plat map *for those properties where the legal description in the most recent deed refers to a certified survey map or a recorded plat map.* (lots on subdivided or platted property (e.g. lot 2 of xyz subdivision)).

  Figure #: 1 **Title: ALTA/ACSM Land Title Survey**
- [x] **Signed Statement:** A statement signed by the Responsible Party (RP), which states that he or she believes that the attached legal description accurately describes the correct contaminated property.

MAPS (meeting the visual aid requirements of s. NR 716.15(2)(h))

Maps must be no larger than 8.5 x 14 inches unless the map is submitted electronically.

- [x] **Location Map:** A map outlining all properties within the contaminated site boundaries on a U.S.G.S. topographic map or plat map in sufficient detail to permit easy location of all parcels. If groundwater standards are exceeded, include the location of all potable wells within 1200 feet of the site.
  Note: *Due to security reasons municipal wells are not identified on GIS Packet maps. However, the locations of these municipal wells must be identified on Case Closure Request maps.*

  Figure #: 2 **Title: Site Location Map**
- [x] **Detailed Site Map:** A map that shows all relevant features (buildings, roads, individual property boundaries, contaminant sources, utility lines, monitoring wells and potable wells) within the contaminated area. This map is to show the location of all contaminated public streets, and highway and railroad rights-of-way in relation to the source property and in relation to the boundaries of groundwater contamination exceeding a ch. NR 140 Enforcement Standard (ES), and/or in relation to the boundaries of soil contamination exceeding a Residual Contaminant Level (RCL) or a Site Specific Residual Contaminant Levels (SSRCL) as determined under s. NR 720.09, 720.11 and 720.19.

  Figure #: 2 & 3 **Title: Groundwater Flow & Benzene Isoconcentration Map - January 2008**
- [x] **Soil Contamination Contour Map:** For sites closing with residual soil contamination, <u>this map is to show the location of all contaminated soil and a single contour</u> showing the horizontal extent of each area of contiguous residual soil contamination that exceeds a Residual Contaminant Level (RCL) or a Site Specific Residual Contaminant Level (SSRCL)as determined under s. NR 720.09, 720.11 and 720.19.

  Figure #: 4 **Title: Post Excavation Results**

BRRTS #: 03-49-000605 ACTIVITY NAME: YELLOW RIVER SUPPLY

MAPS (continued)

☒ **Geologic Cross-Section Map:** A map showing the source location and vertical extent of residual soil contamination exceeding a Residual Contaminant Level (RCL) or a Site Specific Residual Contaminant Level (SSRCL). If groundwater contamination exceeds a ch. NR 140 Enforcement Standard (ES) when closure is requested, show the source location and vertical extent, water table and piezometric elevations, and locations and elevations of geologic units, bedrock and confining units, if any.

Figure #: 5 **Title: Cross Section A - A'**

Figure #: 6 **Title: Cross Section B - B'**

☒ **Groundwater Isoconcentration Map:** For sites closing with residual groundwater contamination, this map shows the horizontal extent of all groundwater contamination exceeding a ch. NR140 Preventive Action Limit (PAL) and an Enforcement Standard (ES). Indicate the direction and date of groundwater flow, based on the most recent sampling data.
Note: *This is intended to show the total area of contaminated groundwater.*

Figure #: 3 **Title: Groundwater Flow & Benzene Isoconcentration Map January 2008**

☒ **Groundwater Flow Direction Map:** A map that represents groundwater movement at the site. If the flow direction varies by more then 20° over the history of the site, submit 2 groundwater flow maps showing the maximum variation in flow direction.

Figure #: 3 **Title: Groundwater Flow & Benzene Isoconcentration Map January 2008**

Figure #: **Title:**

TABLES (meeting the requirements of s. NR 716.15(2)(h)(3))

Tables must be no larger than 8.5 x 14 inches unless the table is submitted electronically. Tables must not contain shading and/or cross-hatching. The use of **BOLD** or *ITALICS* is acceptable.

☒ **Soil Analytical Table:** A table showing remaining soil contamination with analytical results and collection dates.
Note: This is one table of results for the contaminants of concern. Contaminants of concern are those that were found during the site investigation, that remain after remediation. It may be necessary to create a new table to meet this requirement.

Table #: 1 **Title: Contaminants Of Concern - Residual Soil Sample Analysis**

☒ **Groundwater Analytical Table:** Table(s) that show the most recent analytical results and collection dates, for all monitoring wells and any potable wells for which samples have been collected.

Table #: 2 **Title: Contaminants Of Concern - Ground Water Sample Analysis**

☒ **Water Level Elevations:** Table(s) that show the previous four (at minimum) water level elevation measurements/dates from all monitoring wells. If present, free product is to be noted on the table.

Table #: 3 **Title: Groundwater Monitoring Well Elevations**

IMPROPERLY ABANDONED MONITORING WELLS

For each monitoring well not properly abandoned according to requirements of s. NR 141.25 include the following documents.
Note: *If the site is being listed on the GIS Registry for only an improperly abandoned monitoring well you will only need to submit the documents in this section for the GIS Registry Packet.*

☒ **Not Applicable**

☐ **Site Location Map:** A map showing all surveyed monitoring wells with specific identification of the monitoring wells which have not been properly abandoned.
Note: *If the applicable monitoring wells are distinctly identified on the Detailed Site Map this Site Location Map is not needed.*

Figure #: **Title:**

☐ **Well Construction Report:** Form 4440-113A for the applicable monitoring wells.

☐ **Deed:** The most recent deed as well as legal descriptions for each property where a monitoring well was not properly abandoned.

☐ **Notification Letter:** Copy of the notification letter to the affected property owner(s).

BRRTS #: 03-49-000605 ACTIVITY NAME: YELLOW RIVER SUPPLY

NOTIFICATIONS

Source Property

☒ **Letter To Current Source Property Owner:** If the source property is owned by someone other than the person who is applying for case closure, include a copy of the letter notifying the current owner of the source property that case closure has been requested.

☒ **Return Receipt/Signature Confirmation:** Written proof of date on which confirmation was received for notifying current source property owner.

Off-Source Property

Group the following information per individual property and label each group according to alphabetic listing on the "Impacted Off-Source Property" attachment.

☐ **Letter To "Off-Source" Property Owners:** Copies of all letters sent by the Responsible Party (RP) to owners of properties with groundwater exceeding an Enforcement Standard (ES), and to owners of properties that will be affected by a land use control under s. 292.12, Wis. Stats.
Note: *Letters sent to off-source properties regarding residual contamination must contain standard provisions in Appendix A of ch. NR 726.*

Number of "Off-Source" Letters: NA

☐ **Return Receipt/Signature Confirmation:** Written proof of date on which confirmation was received for notifying any off-source property owner.

☐ **Deed of "Off-Source" Property:** The most recent deed(s) as well as legal descriptions, for all affected deeded **off-source property(ies).** This does not apply to right-of-ways.
Note: *If a property has been purchased with a land contract and the purchaser has not yet received a deed, a copy of the land contract which includes the legal description shall be submitted instead of the most recent deed. If the property has been inherited, written documentation of the property transfer should be submitted along with the most recent deed.*

☒ **Letter To "Governmental Unit/Right-Of-Way" Owners:** Copies of all letters sent by the Responsible Party (RP) to a city, village, municipality, state agency or any other entity responsible for maintenance of a public street, highway, or railroad right-of-way, within or partially within the contaminated area, for contamination exceeding a groundwater Enforcement Standard (ES) and/or soil exceeding a Residual Contaminant Level (RCL) or a Site Specific Residual Contaminant Level (SSRCL).

Number of "Governmental Unit/Right-Of-Way Owner" Letters: 1

State of Wisconsin \ DEPARTMENT OF NATURAL RESOURCES

Jim Doyle, Governor
Scott Hassett, Secretary
John Gozdzialski, Regional Director

Northern Region Headquarters
107 Sutliff Ave
Rhinelander, Wisconsin 54501-3349
Telephone 715-365-8900
FAX 715-365-8932
TTY Access via relay - 711

June 25, 2009

Mr. Dennis Nordstrand
Yellow River Supply Corporation
210 Sommers Landing Road
Hudson, Wisconsin 54016

SUBJECT: Final Case Closure with Continuing Obligations
Yellow River Supply, 153 150th Avenue, Turtle Lake, WI
WDNR BRRTS Activity #: 03-49-000605, Commerce # 54889-9999-77

Dear Nordstrand:

On February 24, 2009, the Northern Region Closure Committee reviewed the above referenced case for closure. This committee reviews environmental remediation cases for compliance with state laws and standards to maintain consistency in the closure of these cases. On February 27, 2009, you were notified that the Closure Committee had granted conditional closure to this case.

On April 21, 2009 the Department received documentation of abandonment of the on-site monitoring wells.

Based on the correspondence and data provided, it appears that your case meets the closure requirements in ch. NR 726, Wisconsin Administrative Code. The Department considers this case closed and no further investigation or remediation is required at this time, however, you and future property owners must comply with certain continuing obligations as explained in this letter.

GIS Registry

This site will be listed on the Remediation and Redevelopment Program's GIS Registry. The specific reasons are summarized below:

- Residual soil contamination exists that must be properly managed should it be excavated or removed
- Groundwater contamination is present above Chapter NR 140 enforcement standards

This letter and information that was submitted with your closure request application will be included on the GIS Registry. To review the sites on the GIS Registry web page, visit the RR Sites Map page at http://dnr.wi.gov/org/aw/rr/gis/index.htm. If the property is listed on the GIS Registry because of remaining contamination and you intend to

construct or reconstruct a well, you will need prior Department approval in accordance with s. NR 812.09(4)(w), Wis. Adm. Code. To obtain approval, Form 3300-254 needs to be completed and submitted to the DNR Drinking and Groundwater program's regional water supply specialist. This form can be obtained on-line http://dnr.wi.gov/org/water/dwg/3300254.pdf or at the web address listed above for the GIS Registry.

Closure Conditions

Please be aware that pursuant to s. 292.12 Wisconsin Statutes, compliance with the requirements of this letter is a responsibility to which the current property owner and any subsequent property owners must adhere. You must pass on the information about these continuing obligations to the next property owner or owners. If these requirements are not followed or if additional information regarding site conditions indicates that contamination on or from the site poses a threat to public health, safety, welfare, or the environment, the Department may take enforcement action under s. 292.11 Wisconsin Statutes to ensure compliance with the specified requirements, limitations or other conditions related to the property or this case may be reopened pursuant to s. NR 726.09, Wis. Adm. Code. The Department intends to conduct inspections in the future to ensure that the conditions included in this letter.

Residual Soil Contamination

Residual soil contamination remains as indicated on the Post Excavation Results map, Figure 4 which was prepared by Cedar Corporation dated January 2007, a copy of which is attached. Figure 2, a Topographic Map displays the property boundary of the Yellow River Supply site and is also attached. If soil in the specific locations described above is excavated in the future, then pursuant to ch. NR 718 or, if applicable, ch. 289, Stats., and chs. 500 to 536, the property owner at the time of excavation must sample and analyze the excavated soil to determine if residual contamination remains. If sampling confirms that contamination is present the property owner at the time of excavation will need to determine whether the material is considered solid or hazardous waste and ensure that any storage, treatment or disposal is in compliance with applicable standards and rules. In addition, all current and future owners and occupants of the property need to be aware that excavation of the contaminated soil may pose an inhalation or other direct contact hazard and as a result special precautions may need to be taken to prevent a direct contact health threat to humans.

Residual Groundwater Contamination

Groundwater impacted by petroleum related contamination greater than enforcement standards set forth in ch. NR140, Wis. Adm. Code, is present on this contaminated property. For more detailed information regarding the locations where groundwater samples have been collected (i.e., monitoring well locations) and the associated contaminant concentrations, refer to the Remediation and Redevelopment Program's GIS Registry at the RR Sites Map page at http://dnr.wi.gov/org/aw/rr/gis/index.htm.

Vapor Migration

In addition, depending on site-specific conditions, construction over contaminated materials may result in vapor migration of contaminants into enclosed structures or migration along newly placed underground utility lines. The potential for vapor inhalation and means of mitigation should be evaluated when planning any future redevelopment, and measures should be taken to ensure the continued protection of public health, safety, welfare and the environment at the site.

Dewatering Permits

The Department's Watershed Management Program regulates point source discharges of contaminated water, including discharges to surface waters, storm sewers, pits or to the ground surface. This includes discharges from construction related dewatering activities, including utility and building construction.

Based on the concentrations of contaminants remaining in groundwater at this location, it appears likely that dewatering activities would require a permit from the Watershed Management Program. If you or any other person plan to conduct such activities, you or that person must contact that program, and if necessary, apply for the necessary discharge permit. Additional information regarding discharge permits is available at http://www.dnr.state.wi.us/org/water/wm/ww/

The Department appreciates your efforts to restore the environment at this site. If you have any questions regarding this closure decision or anything outlined in this letter, please contact Phil Richard at 715-762-1352.

Sincerely,

John Robinson
Team Supervisor
Northern Region Remediation & Redevelopment Program

Attachments: Figure 2: Topographic Map Yellow River Supply
Figure 3: Estimated Extent of Remaining Ground Water Contamination
Figure 4: Post Excavation Results

cc: Scott McCurdy
Cedar Corporation
604 Wilson Avenue, Menomonie, Wisconsin 54751

Pat Bergin
Cemstone Ready-Mix
2025 Center Point BLVD
Mendota Heights, MN 55120

Dave Blair
Wisconsin Department of Commerce
P. O. 8044
Madison, WI 53708-8044

Put on BRRTS 2/27/09 (84)

State of Wisconsin \ DEPARTMENT OF NATURAL RESOURCES

Jim Doyle, Governor
Matthew J. Frank, Secretary
John Gozdzialski, Regional Director

Park Falls Service Center
875 S. 4th Ave
Park Falls, Wisconsin 54552
Telephone 715-762-4684
FAX 715-762-4348

February 27, 2009

Mr. Dennis Nordstrand
Yellow River Supply Corporation
210 Sommers Landing Road
Hudson, Wisconsin 54016

Subject: Conditional Closure Decision,
With Requirements to Achieve Final Closure
Yellow River Supply, 153 150th Avenue, Turtle Lake, Wisconsin
WDNR BRRTS Activity # 03-49-000605, Comm. # 54889-9999-77

Dear Mr. Nordstrand:

On February 24, 2009, the Northern Region Closure Committee reviewed your request for closure of the case described above. The Northern Region Closure Committee reviews environmental remediation cases for compliance with state rules and statutes to maintain consistency in the closure of these cases. After careful review of the closure request, the Northern Region Closure Committee has determined that the petroleum contamination on the site from the former underground storage tank system appears to have been investigated and remediated to the extent practicable under site conditions. Your case meets the screening criteria of s. NR 746.07 or s. NR 746.08, Wis. Adm. Code, and the requirements of ch. NR 726, Wis. Adm. Code and will be closed if the following conditions are satisfied:

The monitoring wells at the site must be properly abandoned in compliance with ch. NR 141, Wis. Adm. Code. Documentation of well abandonment must be submitted to Phil Richard on Form 3300-005 found at http://dnr.wi.gov/org/water/dwg/gw/ or provided by the Department of Natural Resources.

Any remaining purge water, waste and/or soil piles generated as part of site investigation or remediation activities must be removed from the site and disposed of or treated in accordance with Department of Natural Resources' rules. Once that work is completed, please send appropriate documentation regarding the treatment or disposal of the remaining purge water, waste and/or soil piles.

When the above conditions have been satisfied, please submit the appropriate documentation (for example, well abandonment forms, disposal receipts, copies of correspondence, etc.) to verify that applicable conditions have been met, and your case will be closed. Your site will be listed on the DNR Remediation and Redevelopment GIS Registry. Information that was submitted with your closure request application will be included on the GIS Registry. To review the site on the GIS Registry web page, visit the RR Sites Map page at: http://dnr.wi.gov/org/aw/rr/gis/index.htm.

Section 101.143, Wis. Stats., requires that PECFA claimants seeking reimbursement of interest costs, for sites with petroleum contamination, submit a final reimbursement claim within 120 days after they receive a closure letter on their site. For claims not received by the PECFA Program within 120 days of the date of this letter, interest costs after 60 days of the date of this letter will not be eligible for PECFA reimbursement. If there is equipment purchased with PECFA funds remaining at the site, contact the Commerce PECFA Program to determine the method for salvaging the equipment.

Please be aware that the case may be reopened pursuant to s. NR 726.09, Wis. Adm. Code, if additional information regarding site conditions indicates that contamination on or from the site poses a threat to public health, safety, or welfare or to the environment.

We appreciate your efforts to restore the environment at this site. If you have any questions regarding this letter, please contact me at 715-762-1352.

Sincerely,

Philip E. Richard
Hydrogeologist
Remediation & Redevelopment Program

Enclosure

cc: Scott McCurdy, Cedar Corporation, 604 Wilson Avenue, Menomonie, WI 54751
Dave Blair, Department of Commerce (e-mail) — Sent / PER / 2/27/09
File

12

BOOK 0854 PAGE 0672

610961

DOCUMENT NO.

WARRANTY DEED

This Deed made between **YELLOW RIVER SUPPLY CORPORATION**, a Wisconsin corporation, Grantor and **CEMSTONE READY-MIX, INC.**, a Wisconsin corporation, Grantee,

RECEIVED FOR RECORD
APR 16 2001
AT 1:00 O'CLOCK P. M
Bonnie Hallberg, Register of Deeds
POLK COUNTY
Laurie Anderson, Deputy

Witnesseth, That the said Grantor conveys to Grantee the following described real estate in Polk County, State of Wisconsin:

"SEE ATTACHED EXHIBIT A"

TRANSFER FEE $ 2160.00

RETURN TO:
POLK COUNTY ABSTRACT CO.
P.O. Box 310
Balsam Lake, WI 54810

This is not homestead property.

Together with all and singular the hereditaments and appurtenances thereunto belonging;

And Grantor warrants that the title is good, indefeasible in fee simple and free and clear of encumbrances, and will warrant and defend same.

Dated this 29th day of March, 2001.

YELLOW RIVER SUPPLY CORPORATION

Dennis Nordstrand (SEAL)
By: Dennis Nordstrand, President

AUTHENTICATION

Signature of Dennis Nordstrand, President of Yellow River Supply Corporation, authenticated this 29th day of March, 2001.

Robert W. Mudge
TITLE: Member, State Bar of Wisconsin

THIS INSTRUMENT DRAFTED BY:
Robert W. Mudge, Attorney
MUDGE, PORTER, LUNDEEN & SEGUIN, S.C.
110 Second Street, P.O. Box 469
Hudson, Wisconsin 54016

12

PARCEL A:

CEMSTONE DESCRIPTION: EXHIBIT "A"

Part of the S 1/2 of SE 1/4, and part of the SE 1/4 of SW 1/4, Section 14-34-15, Town of Beaver, Polk County, Wisconsin, more particularly described as follows:
Commencing at the Southwest corner Said Section 14;
Thence S89°46'48"E 1831.18 feet along the South line said SW 1/4 to the point of beginning;
Thence N14°38'05"E 1345.29 feet to the North line said SE/SW;
Thence along said North line, N89°50'25"E 500.00 feet to the Northeast corner thereof;
Thence N89°38'27"E 2649.71 feet along the North line of the South 1/2 of the SE 1/4 to the East line said Section 14;
Thence along the East line said SE 1/4, S00°00'29"W 1314.33 feet to the Southeast corner said Section 14;
Thence along the South line said SE 1/4, S89°49'00"W 2658.20 feet to the South 1/4 corner said Section 14;
Thence N89°46'48"W 831.19 feet along the South line said SE/SW to the point of beginning. Said parcel contains 4,345,370 square feet (±99.76 acres), more or less.
Subject to existing County and Town road right of ways.

PARCEL B: (TOWN OF WEST SWEDEN)
Lot 1 of Certified Survey Map No. 689 recorded in Volume 3 of Certified Survey Maps, Page 181, Document No. 397173, and Lot 1 of Certified Survey Maps, recorded in Volume 1 of Certified Survey Maps, page 36, Document No. 296843, and easement for roadway thereto, together with an easement over the NW 1/4 of NE 1/4, Section 28-37-17 as described in Volume 207 REcords, page 37, Doc. No. 288494, Polk County, Wisconsin
TAX PARCEL No. 48-497-0; 48-495-0

PARCEL C: (TOWN OF OSCEOLA)
Lot 1 of Certified Survey Map No. 780 recorded in Volume 4 of Certified Survey Maps, Page 25, Document No. 403272, being located in the SE 1/4 of SE 1/4, Section 13-33-19, Polk County, Wisconsin except parcel as described in Volume 577, Records, page 373, Doc. No. 494335.
TAX PARCEL No. 42-1048-0

ALTA/ACSM LAND TITLE SURVEY

To (1) CEMSTONE READY MIX, INC., (2) RIVER VALLEY ABSTRACT & TITLE, INC. (3) FIRST AMERICAN TITLE INSURANCE COMPANY:

This is to certify that this map or plot and the survey on which it is based were made in accordance with "Minimum Standard Detail Requirements for ALTA/ACSM Land Title Surveys", jointly established and adopted by ALTA, ACSM and NSPS in 1999, and includes Items 1, 2, 3, 4, 7(1), 8, 9, 10, 11b and 13 of Table A thereof. Pursuant to the Accuracy Standards as adopted by ALTA, ACSM and NSPS and in effect on the date of this certification, undersigned further certifies that proper field procedures, instrumentation, and adequate survey personnel were employed in order to achieve results comparable to those outlined in the "Minimum Angle, Distance, and Closure Requirements for Survey Measurements Which Control Land Boundaries for ALTA/ACSM Land Title Surveys."

1. The survey was made on the ground on January 25, 2001, by me or under my supervision and correctly shows the metes and bounds description and the land area of the subject property, the location and type of all buildings, structures and other improvements situated on subject property, and any other matters situated on the subject property.
2. Except as shown on the survey, there are no visible easements or right of way of which the undersigned has been advised.
3. There are no party walls and no observable, aboveground encroachments (a) by the improvements on the subject property upon adjoining properties, streets, alleys, easements, or rights of way, or (b) by the improvements on any adjoining properties, streets, or alleys upon the subject property.
4. The location of each easement, right of way, servitude, and other matter (above or below ground) affecting the subject property and listed in the Title Commitment No. 4808, dated February 19, 2001 issued by First American Title Insurance Company, with respect to the subject property, has been shown on the survey, together with appropriate recording references, to the extent that such matters can be located. The property shown on the survey is the property described in that title commitment.
5. The subject property has direct access to and from a duly dedicated and accepted public street or highway known as Silver Lake Drive for access.
6. The subject property does NOT serve adjoining property for drainage, utilities, structural support or ingress or egress.
7. No parking stalls or gravel and asphalt area were accurately located due to snow and ice cover at the time of the data collection.
8. Flood zone designation for subject parcel is Zoned "X", Panel #550577 0225 B, Effective date June 4, 1990.

The parties listed above and their successors and assigns are entitled to rely on the survey and this certificate as being true and accurate.

James T. Swanson, S-1482 Dated:

NOTES:

The location of underground utilities were marked by the representatives of the utility companies. All utilities shown on this map were located as they were marked on the ground at the time of the field work. Location of some of the underground utilities may have not been marked.

EXCEPTIONS:

(c) -Easements granted Polk Burnett Electric Cooperative;
recorded in Volume 147 Records, Page 587, Document No. 214200;
recorded in Volume 330 Records, Page 449, Document No. 342878;
recorded in Volume 540 Records, Page 548, Document No. 473256;
recorded in Volume 800 Records, Page 699, Document No. 591748;
recorded in Volume 147 Records, Page 573, Document No. 214206;
recorded in Volume 147 Records, Page 572, Document No. 214205;
recorded in Volume 196 Records, Page 208, Document No. 282473;
Listed easements do affect surveyed parcel. All easements listed are blanket easements.

(d) -Easements granted Turtle Lake Telephone Company;
recorded in Volume 375 Records, Page 180, Document No. 363529;
recorded in Volume 375 Records, Page 182, Document No. 363531;
recorded in Volume 375 Records, Page 158, Document No. 363527;
recorded in Volume 375 Records, Page 159, Document No. 363528;
Listed easements do affect surveyed parcel. All easements listed are blanket easements.

DESCRIPTION PER TITLE COMMITMENT:

The S 1/2 of SE 1/4, E 1/2 of SW 1/4, Section 14-34-15, except parcel in the SE 1/4 of SW 1/4, described in Volume 1 of Certified Survey Maps, page 35, Document No. 298718 in the office of the Register of Deeds for Polk County, Wisconsin.

That part of the SE 1/4 of SW 1/4, Section 14-34-15, described as follows: Beginning at a point on the East line of SE 1/4 of SW 1/4, 33 feet North of the South quarter corner of said Section 14; thence West parallel to the South line of said Section 14, 987.00 feet; thence North at right angles to the South line of said Section 14, 867.00 feet; thence North 70 degrees 23 minutes East 1047.80 feet; thence South 1209.00 feet to the point of beginning, as recorded in Volume 1 of Certified Survey Maps, page 35, Document No. 298718, Polk County, Wisconsin.

The SE 1/4 of NW 1/4; Government Lot 2, excepting therefrom the portion included in the Plat of Morningside Park, in Section 14-34-15; and the NW 1/4 of SE 1/4 and 10 acres being 40 rods square in the Southwest corner of Government Lot 3, Section 14-34-15, also except parcels in Government Lot 2, described as follows:

1. Volume 49 Deeds, page 444;
2. Volume 154 Deeds, page 110, Document No. 250523;
3. Volume 179 Deeds, page 39, Document No. 254027;
4. Volume 182 Deeds, Page 88, Document No. 264308;
5. Volume 185 Deeds, page 95, Document No. 274577;
6. All of Government Lot 2, Section 14-34-15, lying Westerly of the Westerly right of way of County Highway "T" and Northerly of the Northerly right of way of the town road, known as Silver Lake Drive, except the West 660 feet of said Government Lot 2;
7. Volume 533 Records, page 170, Document No. 468649;
8. Lot 1 of Certified Survey Map No. 2501 recorded in Volume 11 of Certified Survey Maps, page 209, Document No. 570394;
9. Volume 360 Records, page 260, Document No. 356256, Polk County, Wisconsin.

Excluding the SE 1/4 NW 1/4, of Section 14-34-15 per conversation with Mathy, Cemstone and Yellow River representatives at a on-site meeting 02-22-01.

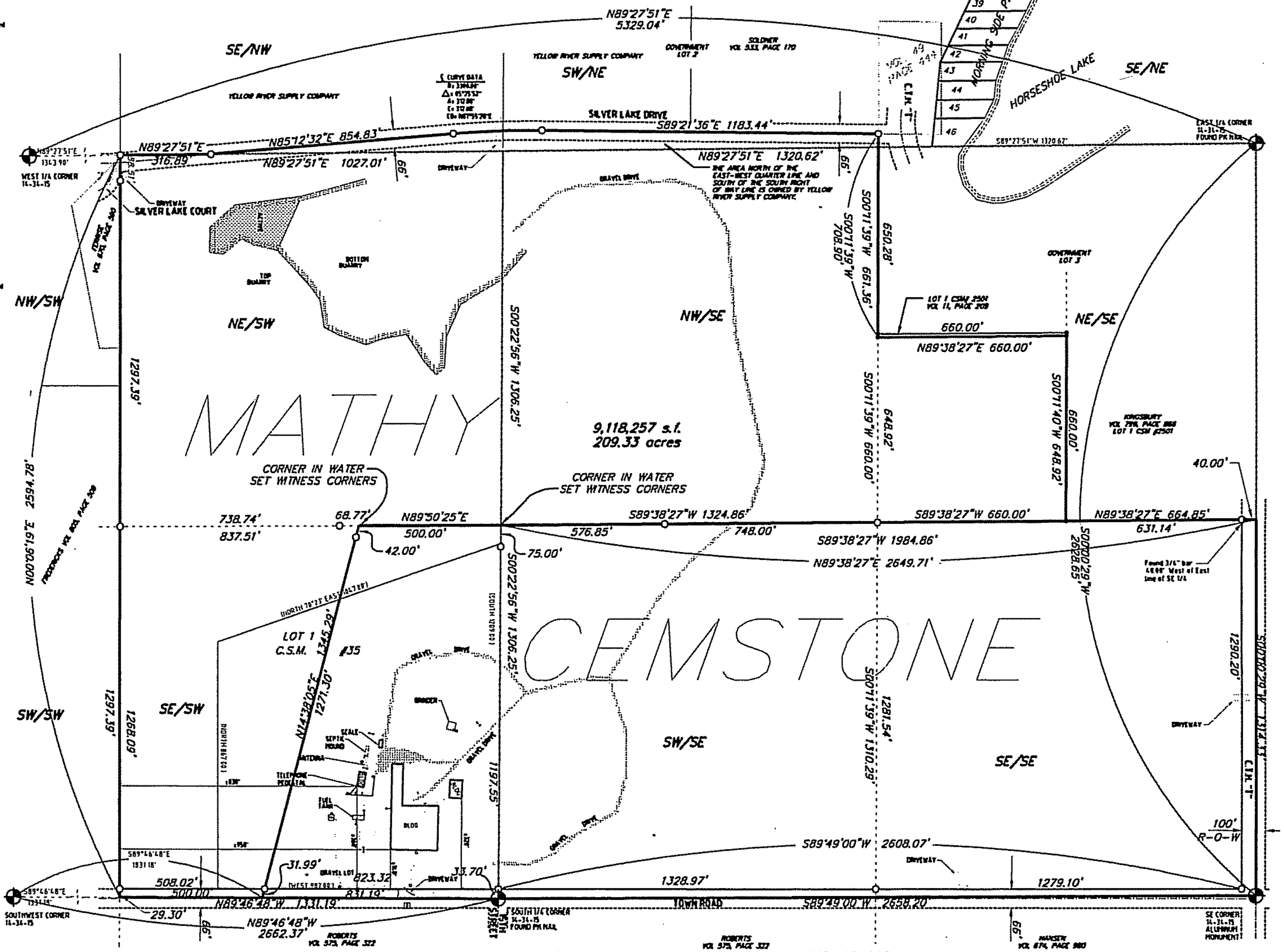

CEMSTONE DESCRIPTION:

Part of the S 1/2 of SE 1/4, and part of the SE 1/4 of SW 1/4, Section 14-34-15, Town of Beaver, Polk County, Wisconsin, more particularly described as follows:
Commencing at the Southwest corner Said Section 14;
Thence S89°46'48"E 1831.18 feet along the South line said SW 1/4 to the point of beginning;
Thence N14°38'05"E 1345.29 feet to the North line said SE/SW;
Thence along said North line, N89°50'25"E 500.00 feet to the Northeast corner thereof;
Thence N89°38'27"E 2649.71 feet along the North line of the South 1/2 of the SE 1/4 to the East line said Section 14;
Thence along the East line said SE 1/4, S00°00'29"W 1314.33 feet to the Southeast corner said Section 14;
Thence along the South line said SE 1/4, S89°49'00"W 2658.20 feet to the South 1/4 corner said Section 14;
Thence N89°46'48"W 831.19 feet along the South line said SE/SW to the point of beginning. Said parcel contains 4,345,370 square feet (±99.76 acres), more or less.
Subject to existing County and Town road right of ways.

MATHY DESCRIPTION:

All of the NE 1/4 of SW 1/4, NW 1/4 of SE 1/4, and part of the SE 1/4 of SW 1/4, and part of the NE 1/4 of SE 1/4, Government Lot 3, and part of the SE 1/4, NW 1/4 and the SW 1/4, NE 1/4, Government Lot 2, all located in Section 14-34-15, Town of Beaver, Polk County, Wisconsin, more particularly described as follows:
Commencing at the Southwest corner said Section 14;
Thence along the South line of the SW 1/4, Section 14, S89°46'48"E 1331.18 feet to the SW corner said SE/SW, and the point of beginning;
Thence N00°06'19"E 2594.78 feet along the West line of the E 1/2 of the SW 1/4 said Section 14 to the Northwest corner said NE/SW; Thence along the North line said NE/SW, N89°27'51"E 316.89 feet to the centerline of Silver Lake Drive;
Thence along said centerline, N85°12'32"E 854.83 feet to the arc of a 3300.00 foot radius curve, concave to the Southeast;
Thence along said arc 312.80 feet, the chord of which bears N87°55'28"E 312.68 feet;
Thence continuing along said center line, S85°21'36"E 1183.44 feet;
Thence S00°11'39"W 708.90 feet to the South line of Lot 1 Certified Survey Map #2501, Volume 11, Page 209;
Thence along the South line thereof, N89°38'27"E 660.00 feet;
Thence S00°11'40"W 648.92 feet;
Thence S89°38'27"W 1984.86 feet along the North line of the S 1/2 of the SE 1/4 to the Northeast corner said SW/SE;
Thence S89°50'25"W 500.00 feet along said North line of said SE/SW;
Thence S14°38'05"W 1345.29 feet to the South line said SE/SW;
Thence along said South line, N89°46'48"W 500.00 feet to the point of beginning.
Said parcel contains 4,892,419 square feet (±112.31 acres), more or less.
Subject to existing County and Town road right of ways.

LEGEND

- Government Corner (as noted)
- Set 3/4" x 24" rebar weighing 1.502 lbs./lineal ft.
- Found 3/4" bar
- Record Bearing/Distance Lot 1, CSM#35
- Monitoring Well
- Well Head
- Light Pole
- Utility Pole
- Overhead Utility
- Electric Outlet
- Telephone Pedestal

SCALE: 1" = 200'
0' 200' 400'

Bearing are referenced to Polk County GPS Coordinate System County Grid North

SITE MAP

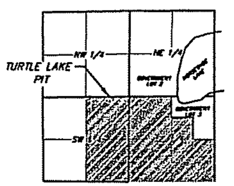

SEC 14, T34N, R15W
TOWN OF BEAVER

PREPARED FOR:
CEMSTONE READYMIX, INC.

JOB NO.	1768-0011
BOOK NO.	
DRAWN BY	RDJ
CHECKED BY	
DATE	03-30-01
REVISIONS	07-06-01
REFERENCE FILE	C1768-0011
DRAWING FILE	TRT_ALTA.DWG

Cedar corporation
604 Wilson Avenue
Menomonie, Wisconsin 54751
715-235-9081
800-472-7372
FAX 715-235-2727
www.cedarcorp.com
engineers • architects • planners • environmental specialists
land surveyors • landscape architects • interior designers

ALTA/ACSM LAND TITLE SURVEY
CEMSTONE READYMIX, INC.
TURTLE LAKE PIT
TOWN OF BEAVER, WISCONSIN

SHEET NO. 1 OF 1

Dennis Nordstrand, duly authorized representative of Yellow River Supply in accordance with Ch. 292, Wis. Stats. and Ch. NR726 Wis. Adm. Code, certifies the correct legal description for the property located at 153 150th Avenue, Turtle Lake, Polk County, Wisconsin, is accurately described in that deed recorded in Volume 0854 of Records at Page 0672, as Document No. 610961, a copy of which is attached as Exhibit 1.

YELLOW RIVER SUPPLY

By: Dennis Nordstrand

Dennis Nordstrand

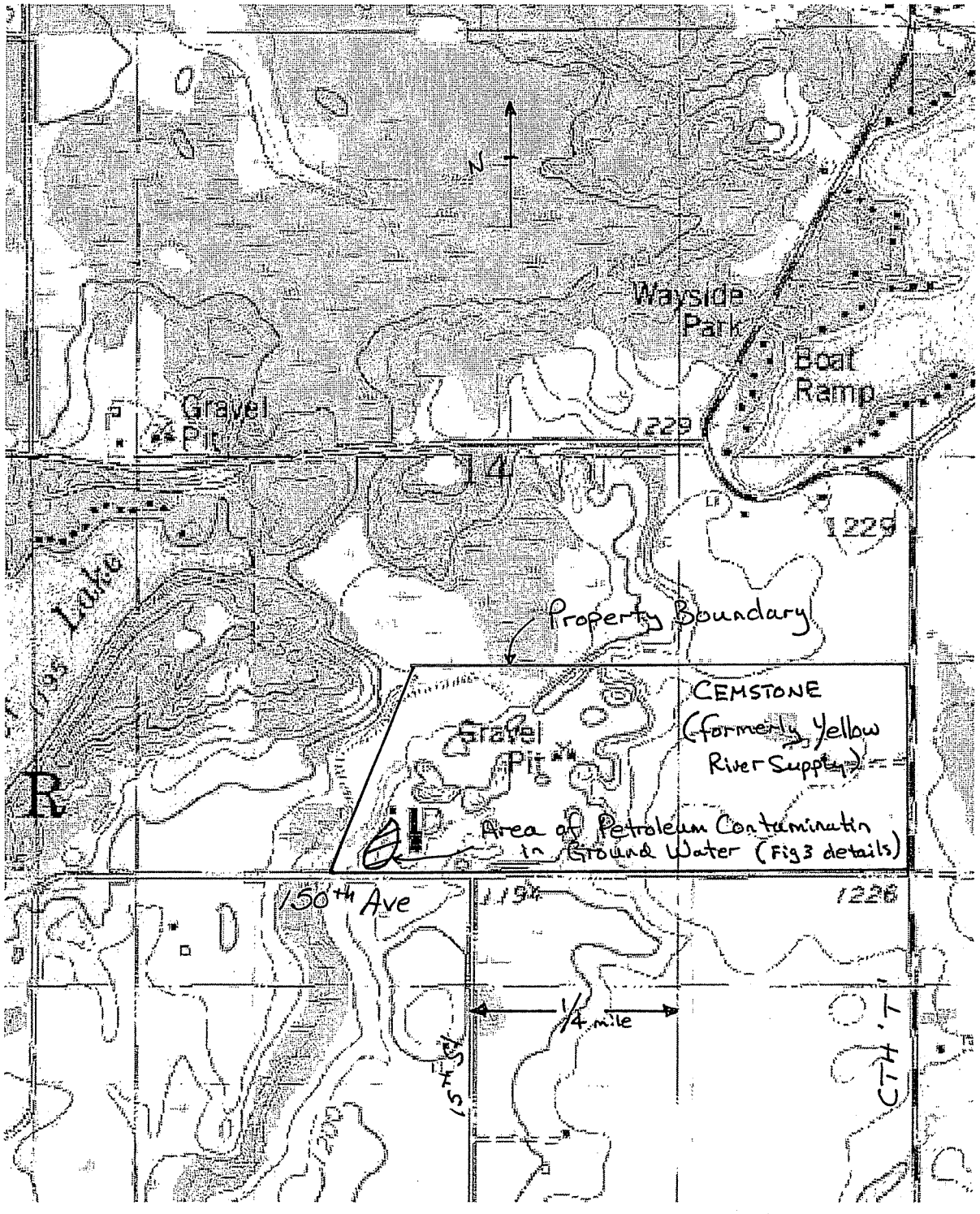

LEGEND

TOPOGRAPHIC MAP
TURTLE LAKE QUADRANGLE
1980

CONTOUR INTERVAL = 10 FEET

Cedar corporation

engineers • architects • planners • environmental specialists
land surveyors • landscape architects • interior designers

604 Wilson Avenue
Menomonie, WI 54751

715-235-9081
800-472-7372
Fax • 715-235-2727
www.cedarcorp.com

DRAWN BY	SITE LOCATION MAP	CHECKED BY
USGS		SEM
DATE		JOB NO.
12/29/2008	YELLOW RIVER SUPPLY (former) 150 th Ave TURTLE LAKE, WI	1575
REVISED BY		FIGURE
SEM		2
SCALE		
NTS		

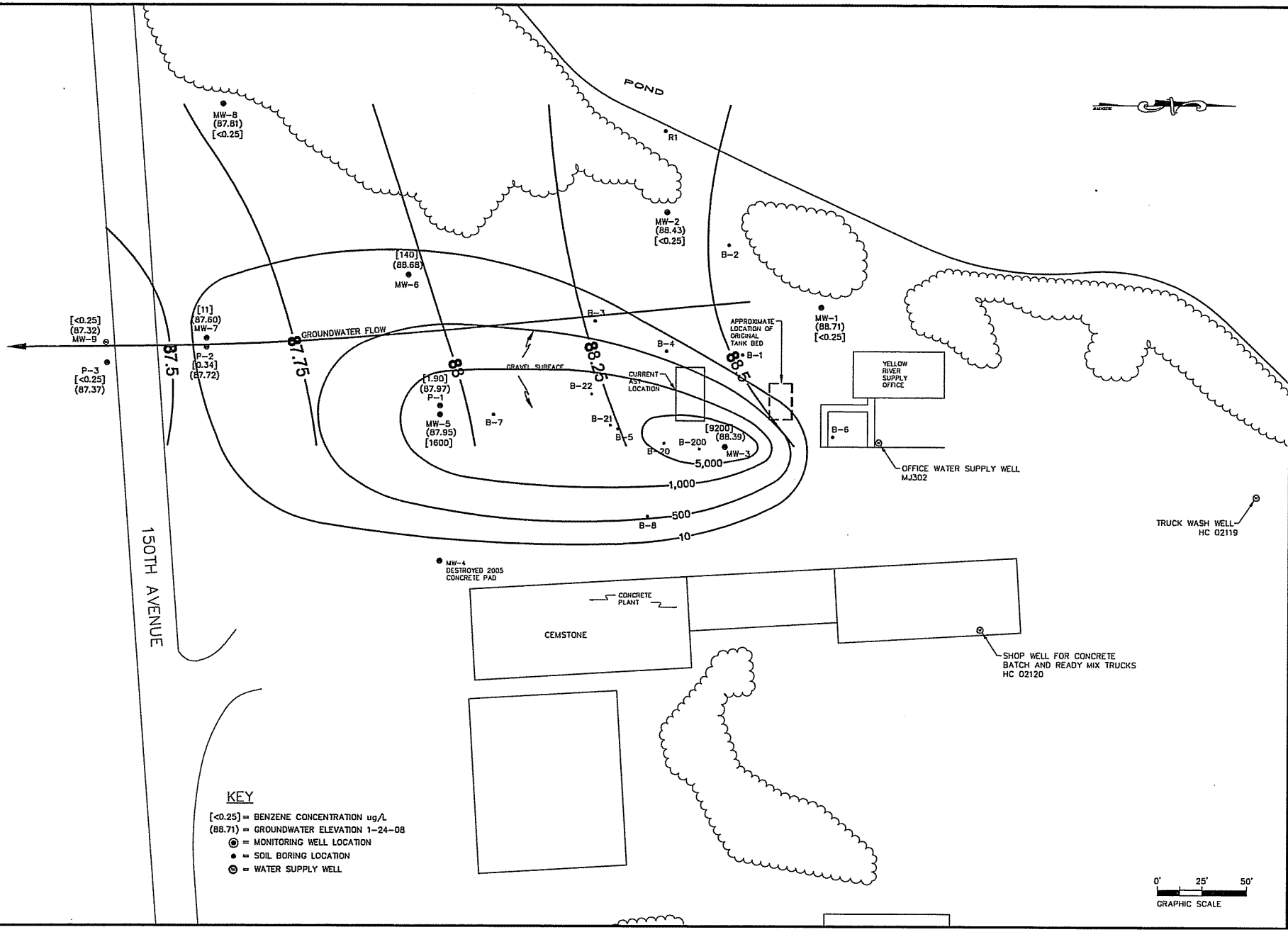

JOB NO.
Y1575-004
BOOK NO.
—
DRAWN BY
KAT/PKF
CHECKED BY
SEM
DATE
NOV 2004
REVISIONS
MAR 2003
JANUARY 2007
REFERENCE FILE
DRAWING FILE
Polk CC Y004base.dwg

Cedar corporation
604 Wilson Avenue
Menomonie, Wisconsin 54751
715-235-9081
800-472-7372
FAX 715-235-2727
www.cedarcorp.com
engineers • architects • planners • environmental specialists
land surveyors • landscape architects • interior designers

YELLOW RIVER SUPPLY CORP.
TURTLE LAKE, WISCONSIN
ESTIMATED EXTENT OF REMAINING GROUND WATER CONTAMINATION

FIGURE
3

I:\Clients\Y1575 Yellow River Supply Corp\005, 004 Remediation\dwg\Polk CC Y004base.dwg 2/12/2009 2:09:59 PM CST

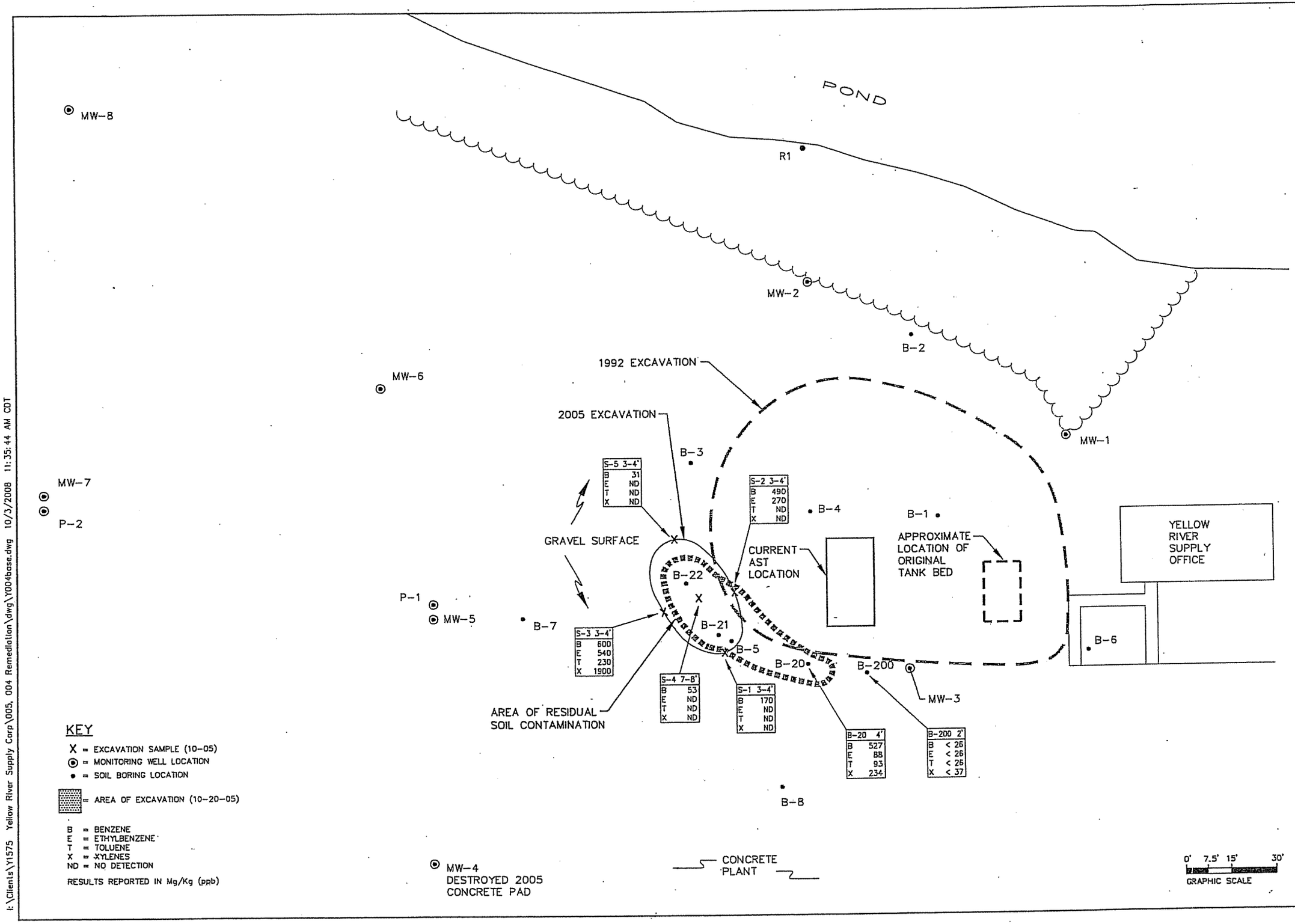

JOB NO.	Y1575-004
BOOK NO.	–
DRAWN BY	KAT/PKF
CHECKED BY	SEM
DATE	NOV 2004
REVISIONS	MAR 2003
	JANUARY 2007
REFERENCE FILE	Y004base.dwg
DRAWING FILE	Y004base.dwg

Cedar corporation
604 Wilson Avenue
Menomonie, Wisconsin 54751
715-235-9081
800-472-2372
FAX 715-235-7377
www.cedarcorp.com
engineers • architects • planners • environmental specialists
land surveyors • landscape architects • interior designers

YELLOW RIVER SUPPLY CORP.
REMEDIATION
TURTLE LAKE, WISCONSIN
POST EXCAVATION RESULTS

FIGURE 4

I:\Clients\Y1575 Yellow River Supply Corp\005, 004 Remediation\dwg\Y004base.dwg 10/3/2008 11:35:44 AM CDT

CROSS SECTION A-A'

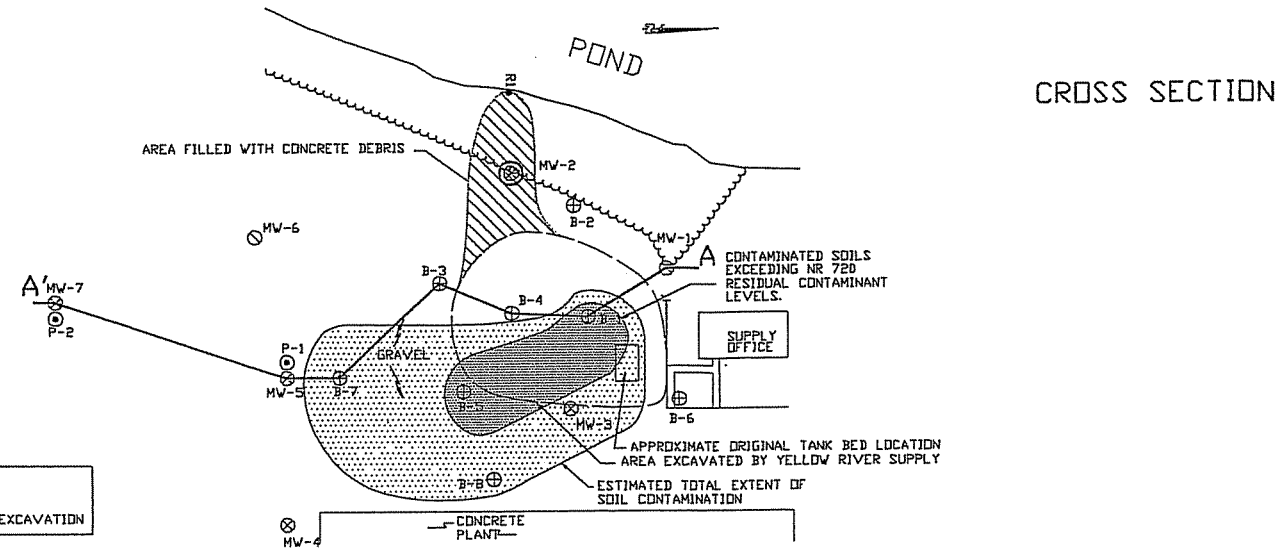

0' 20' 40' 80'
GRAPHIC SCALE

ABBREVIATIONS

F---Fine M---Medium C---Coarse
Ws---Weathered So---Sound

MATERIAL SYMBOLS

Topsoil, Silt, Sandstone, Sand, Peat, Limestone, Gravel, Clay, Igneous Rock

LEGEND OF BORING

Elevation
Boring No.
Well Casing
Sieve Sample
Sandy Gravel
*Laboratory Analytical Results
DRO -
B - Benzene
T - Toluene
E - Ethylbenzene
X - Xylene
F.
Boulders or Cobbles
Top Of Screen
Sand
Shelby Tube S.T.
Field Screening
Ground Water Elevation
IU - Instrument Units
Silty Clay
No Ground Water Observed Above This Elevation
Bottom Of Screen
So
Linestone

* All Laboratory Results Reported In PPM
LDL = Less Than Detection Limits

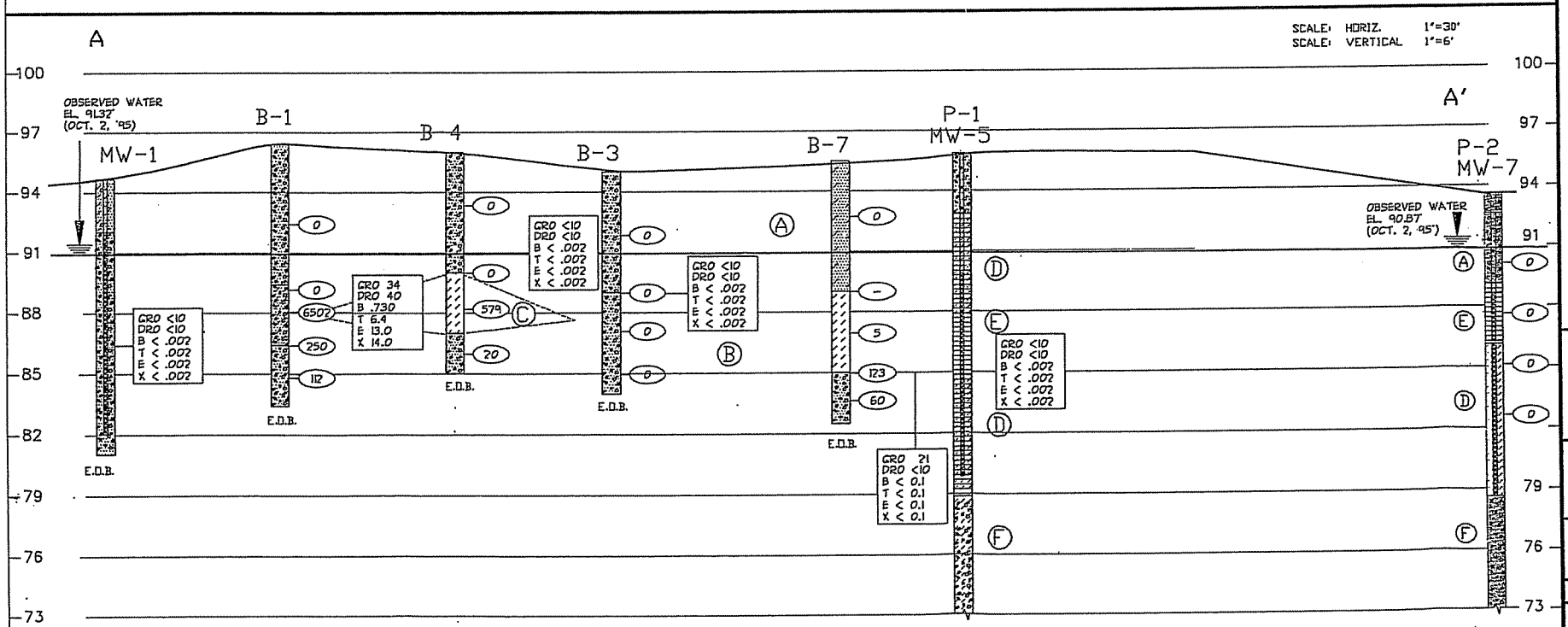

GEOLOGIC LEGEND

- (A) - FINE-MEDIUM BROWN, WELL GRADED GRAVELLY SAND (USCS-SW)
- (B) - FINE, BROWN, SILTY-SAND (USCS-SM)
- (C) - MEDIUM, BROWN, POORLY-GRADED SAND (USCS-SP)
- (D) - ORGANIC CLAY SILT (USCS-OL)
- (E) - PEAT (USCS) PT
- (F) - SANDY WELL ROUNDED GRAVEL

GROUNDWATER ELEVATIONS BASED ON OCT. 1991, DATA

architects • engineers • environmental specialists
cedar corporation
land surveyors • planners • landscape architects
604 wilson avenue
menomonie, wisconsin 54751
715-235-9081
WATS 800-472-7372
FAX 715-235-2727

YELLOW RIVER SUPPLY

TURTLE LAKE, WI

CROSS SECTION A-A'
FIGURE 5

Drawn By	MAP	Plans Checked	EAW
Cadd File	YELLA.DWG	Job Number	1575-002-14

CROSS SECTION B-B'

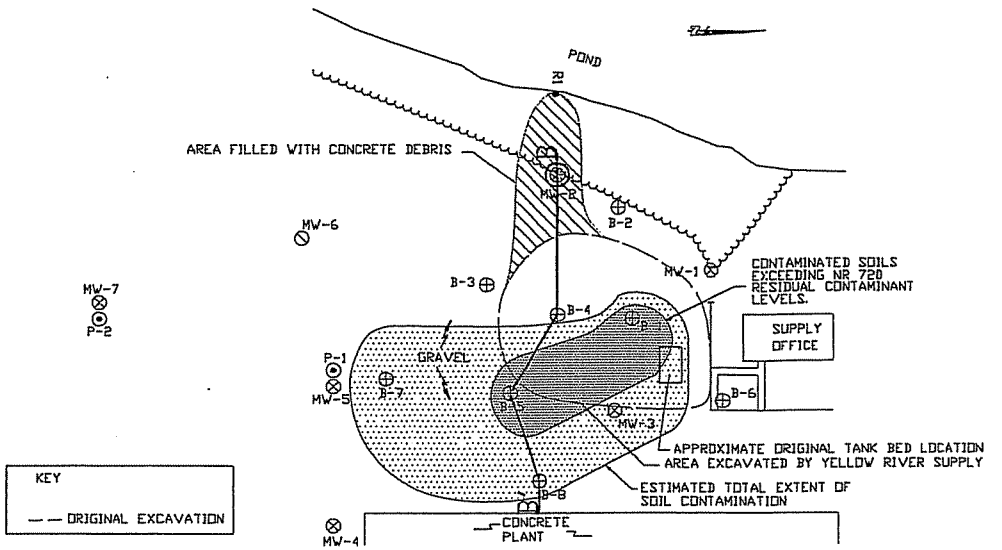

0' 20' 40' 80'
GRAPHIC SCALE

SCALE: HORIZ. 1"=30'
SCALE: VERTICAL 1"=6'

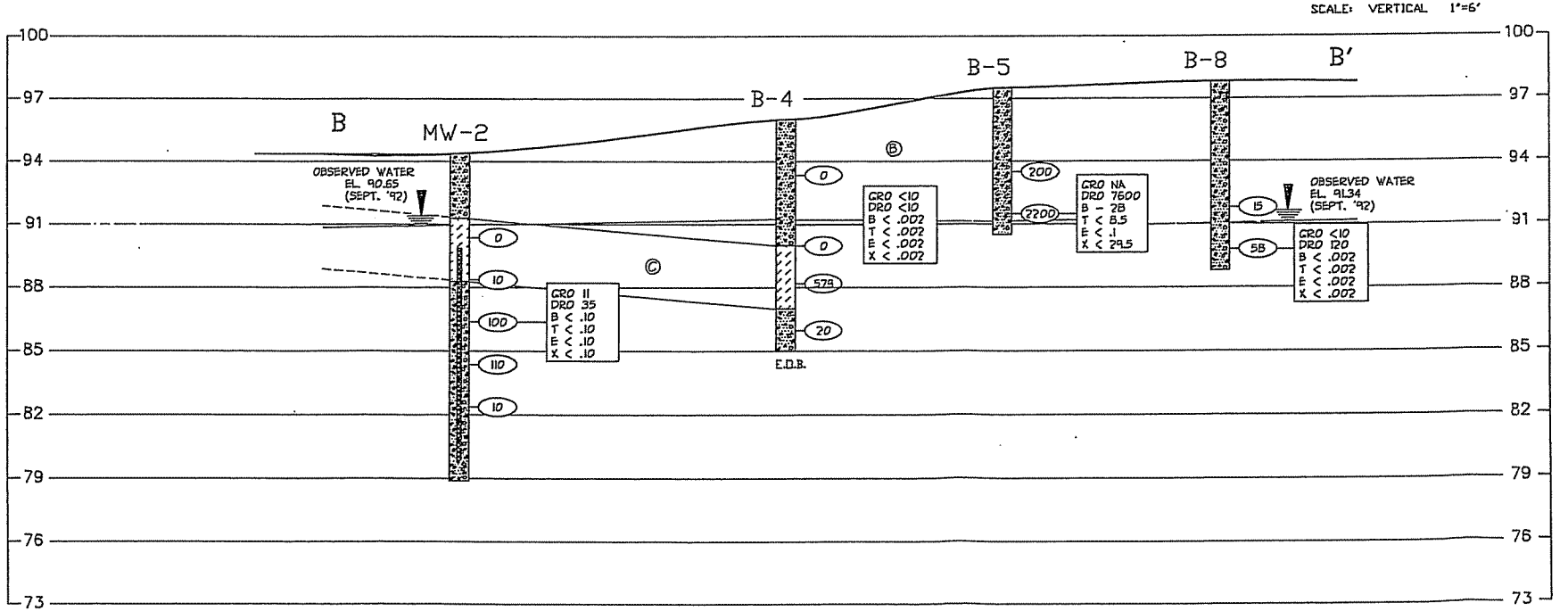

ABBREVIATIONS

F---Fine M---Medium C---Coarse
Ws---Weathered So---Sound

MATERIAL SYMBOLS

Topsoil, Silt, Sandstone, Sand, Peat, Limestone, Gravel, Clay, Igneous Rock

LEGEND OF BORING

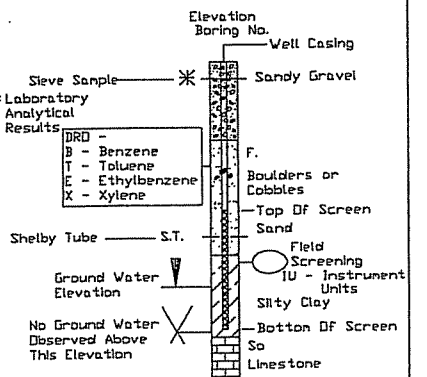

* All Laboratory Results Reported In PPM
LDL = Less Than Detection Limits

GEOLOGIC LEGEND

Ⓐ - FINE-MEDIUM BROWN, WELL GRADED GRAVELLY SAND (USCS-SW)

Ⓑ - FINE, BROWN, SILTY-SAND (USCS-SM)

Ⓒ - MEDIUM, BROWN, POORLY-GRADED SAND (USCS-SP)

GROUNDWATER ELEVATIONS BASED ON OCT. 1991, DATA

architects • engineers • environmental specialists
cedar corporation
land surveyors • planners • landscape architects
604 wilson avenue
menomonie, wisconsin 54751
715-235-9081
WATS 800-472-7372
FAX 715-235-2727

YELLOW RIVER SUPPLY

TURTLE LAKE, WI

CROSS SECTION B-B'
FIGURE 6

Drawn By	MAP	Plans Checked	EAW
Cadd File	YELLB.DWG	Job Number	1575-002-14

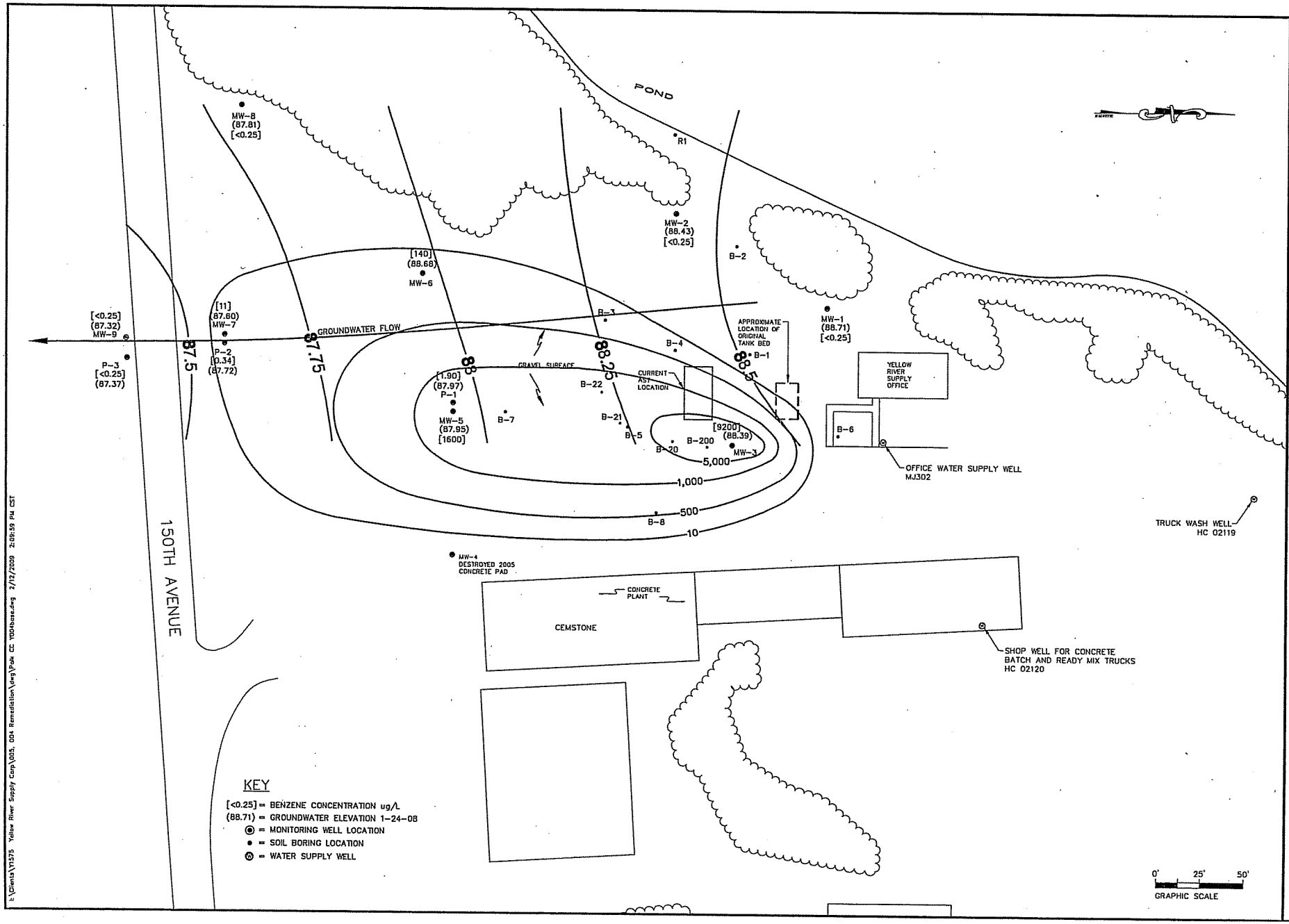

JOB NO.	Y1575-004
BOOK NO.	—
DRAWN BY	KAT/PKF
CHECKED BY	SEM
DATE	NOV 2004
REVISIONS	MAR 2003
	JANUARY 2007
REFERENCE FILE	
DRAWING FILE	Polk CC Y004base.dwg

Cedar corporation
engineers • architects • planners • environmental specialists
land surveyors • landscape architects • interior designers
604 Wilson Avenue
Menomonie, Wisconsin 54751
715-235-9081
800-472-7372
FAX 715-235-7337
www.cedarcorp.com

YELLOW RIVER SUPPLY CORP.

TURTLE LAKE, WISCONSIN

ESTIMATED EXTENT OF REMAINING GROUND WATER CONTAMINATION

FIGURE

3

E:\Clients\Y1575 Yellow River Supply Corp\005, 004 Remediation\dwg\Polk CC Y004base.dwg 2/12/2009 2:09:59 PM CST

CONTAMINANTS OF CONCERN
RESIDUAL SOIL SAMPLE ANALYTICAL RESULTS
YELLOW RIVER SUPPLY COMPANY
TOWN OF BEAVER, POLK COUNTY, WI

			Lead	Results reported in ug/Kg						
			mg/kg	Benzene	E - Benzene	MTBE	Toluene	1,2,4 TMB	1,3,5 TMB	Xylenes
Wis Adm. Code NR720, Table 1 & 2, Residual Contaminant Levels			50-500	5.5	2,900	NS	1,500	NS	NS	4,100
Wis Adm. Code NR746.06 Table 1, Residual Petroleum Product			NS	8,500	4,600	NS	38,000	83,000	11,000	42,000
Wis Adm. Code NR746.06 Table 2, Direct Contact			NS	1,100	NS	NS	NS	NS	NS	NS
Boring Name	**Sample Depth**	**Sample Date**								
B1	7-9'	6/25/1992	NA	730	13,000	NA	6,400	5,500	7,700	14,000
B2	5-7'	6/25/1992	NA	<2	<2	NA	<2	<2	<2	<2
B3	5-7'	6/25/1992	NA	<2	<2	NA	<2	<2	<2	<2
B4	5-7'	6/25/1992	NA	<2	<2	NA	<2	<2	<2	<2
B5		**AREA EXCAVATED IN 2005**								
B6	7-9'	6/25/1992	NA	<2	<2	NA	<2	<2	<2	<2
B7	9-11'	6/26/1992	NA	<100	<100	NA	<100	<100	<100	<100
B8	7-9'	6/26/1992	NA	<2	<2	NA	<2	<2	<2	<2
B20	4'	9/1/2004	NA	527	88	93	93	41	<29	163
B21		**AREA EXCAVATED IN 2005**								
B22		**AREA EXCAVATED IN 2005**								
B200	2'	11/21/2003	20	<26	<26	<26	<26	<26	<26	<37
S-1	4'	10/20/2005	NA	170	<28	<28	<28	<28	<30	<83
S-2	4'	10/20/2005	NA	490	270	<29	<29	<29	44	<87
S-3	4'	10/20/2005	NA	600	540	<29	230	220	60	1,900
S-4	7-8'	10/20/2005	NA	53	<28	<28	<28	<28	<28	<84
S-5	4'	10/20/2005	NA	31	<29	<29	<29	<29	<29	<87
MW-1	7-9'	6/25/1992	NA	<2	<2	NA	<2	<2	<2	<2
MW-2	7-9'	6/25/1992	NA	11	<100	NA	<100	<100	<100	<100
MW-3	7-9'	6/25/1992	NA	68	<100	NA	<100	<100	<100	<100
MW-4	7-9'	6/25/1992	NA	<2	<2	NA	<2	<2	<2	<2
MW-5	11-13'	6/25/1992	NA	<2	<2	NA	<2	<2	<2	<2
MW-6	7.5-9.5'	7/19/1995	7.5	<25	<25	<25	<25	<25	<25	<25
MW-7	7.5-9.5'	7/19/1995	8.9	<25	<25	<25	<25	<25	<25	<25
MW-8	NOT SAMPLED AS NOT INSTALLED NEAR IMPACTED AREAS									
MW-9	**NOT SAMPLED AS NOT INSTALLED NEAR IMPACTED AREAS**									
P-1	7.5-9.5'	7/19/1995	7.4	<25	<25	<25	<25	<25	<25	<25
P-2	7.5-9.5'	7/19/1995	8.9	<25	<25	<25	<25	<25	<25	<25
P-3	**NOT SAMPLED AS NOT INSTALLED NEAR IMPACTED AREAS**									

CONTAMINANTS OF CONCERN
RECENT GROUND WATER SAMPLE ANALYTICAL RESULTS
YELLOW RIVER SUPPLY COMPANY
TOWN OF BEAVER, POLK COUNTY, WI

		Results reported in ug/L							
		Benzene	E - Benzene	MTBE	Naphthalene	Toluene	1,2,4 TMB	1,3,5 TMB	Xylenes
Wis Adm. Code NR140, Table 1 PAL		*0.5*	*140*	*12*	*10*	*200*	*96*		*1,000*
Wis Adm. Code NR140, Table 1 ES		**5**	**700**	**60**	**100**	**1,000**	**480**		**10,000**
Monitoring Well	**Sample Date**								
MW-1	5/25/2004	0.33	<0.22	<0.23		<0.11	<0.25	<0.19	<0.39
	9/1/2004	<0.25	<0.22	<0.23		<0.11	<0.25	<0.19	<0.39
	2/8/2006	<0.25	<0.22	<0.23		<0.11	0.49	<0.19	<0.39
	5/2/2006	<0.25	<0.22	<0.23		<0.11	<0.25	<0.19	<0.39
	8/9/2006	<0.25	<0.22	<0.23		<0.11	<0.25	<0.19	<0.39
	5/21/2007	<0.50	3.50	<0.46		<0.22	8.20	2.90	13.00
	10/17/2007	<0.25	0.78	<0.23		0.13	1.40	<0.19	1.40
	1/24/2008	<0.25	0.22	<0.23	<0.50	<0.11	<0.25	<0.19	<0.39
MW-2	5/25/2004	<0.25	0.74	<0.23		<0.11	0.39	<0.19	<0.39
	9/1/2004	<0.25	<0.22	<0.23		<0.11	<0.25	<0.19	<0.39
	2/8/2006	<2.0	<1.8	<1.8		<0.88	<2.0	<1.5	<3.1
	5/2/2006	<0.25	0.34	<0.23		<0.11	0.39	0.20	<0.39
	8/9/2006	<0.50	<0.44	<0.46	<1	<0.22	<0.50	<0.38	<0.78
	5/21/2007	<0.50	1.30	<0.46		<0.22	0.96	<0.38	<0.78
	10/17/2007	<0.25	0.44	<0.23		0.15	<0.25	<0.19	0.40
	1/24/2008	<0.25	<0.22	<0.23	<0.50	<0.11	<0.25	<0.19	<0.39
MW-3	5/25/2004	**6,900**	*690*	**96**		**5,800**	*350*	*98*	*2,200*
	9/1/2004	**26,000**	**1,600**	<140		**27,000**	**760**	**210**	*6,700*
	2/8/2006	**3,100**	*350*	50		**1,400**	*180*	*61*	930
	5/2/2006	**16,000**	**1,500**	<9.2		**17,000**	**760**	**200**	*6,400*
	8/9/2006	**19,000**	*160*	**120**	**240**	**18,000**	**760**	**220**	*6,200*
	5/21/2007	**16,000**	**1,100**	**110**		**13,000**	**470**	**130**	*4,000*
	10/17/2007	**7,000**	**720**	**86**		**3,700**	320	100	*2,000*
	1/24/2008	**9,200**	**900**	**80**	<0.5	**8,300**	**620**	**200**	*3,900*
MW-4	5/25/2004	<0.25	<0.22	<0.23		<0.11	<0.25	<0.19	<0.39
	9/1/2004	<0.25	<0.22	<0.23		<0.11	<0.25	<0.19	<0.39
	THIS WELL WAS DESTROYED IN 2005								
MW-5	5/25/2004	**440**	*420*	<9.2		**700**	*130*	*23*	*1,000*
	9/1/2004	**2,300**	**2,500**	<12		**4,700**	**840**	**200**	*7,300*
	2/8/2006	**1,900**	**2,700**	<9.2		**3,300**	**970**	**230**	*7,900*
	5/2/2006	**430**	*470*	<9.2		*620*	*170*	*34*	*1,200*
	8/9/2006	**580**	*480*	<1.8	30	*510*	*160*	*27*	*1,300*
	5/21/2007	**810**	**1,100**	<4.6		**1,200**	*350*	*67*	*2,800*
	10/17/2007	**1,400**	**2,100**	<4.6		**2,000**	**770**	**180**	*5,900*
	1/24/2008	**1,600**	**2,500**	<4.6	**220**	**1,800**	**950**	**220**	*6,900*
MW-6	5/25/2004	**6,400**	*460*	40.0		**3,700.0**	*140.0*	*41.0*	*1,800.0*
	9/1/2004	**4,100**	*290*	26.0		*410.0*	*99.0*	*20.0*	*1,100.0*
	2/8/2006	**2,000**	120	15.0		*250.0*	53.0	14.0	600.0
	5/2/2006	**910**	47	<10		8.2	42.0	9.1	280.0
	8/9/2006	**1,700**	120	16.0	12	*290.0*	50.0	11.0	500.0
	5/21/2007	**650**	25	6.4		6.2	18.0	4.8	160.0
	10/17/2007	**140.0**	4.6	1.4		1.4	8.6	2.2	55.0

CONTAMINANTS OF CONCERN
RECENT GROUND WATER SAMPLE ANALYTICAL RESULTS
YELLOW RIVER SUPPLY COMPANY
TOWN OF BEAVER, POLK COUNTY, WI

		Results reported in ug/L							
		Benzene	E - Benzene	MTBE	Naphthalene	Toluene	1,2,4 TMB	1,3,5 TMB	Xylenes
Wis Adm. Code NR140, Table 1 PAL		*0.5*	*140*	*12*	*10*	*200*	*96*		*1,000*
Wis Adm. Code NR140, Table 1 ES		**5**	**700**	**60**	**100**	**1,000**	**480**		**10,000**
MW-7	5/25/2004	**21.00**	0.31	<0.23		0.13	<0.25	<0.19	1.60
	9/1/2004	**38.00**	<0.22	<0.23		<0.11	<0.25	<0.19	2.10
	2/8/2006	*4.40*	<0.88	<0.92		<0.44	<1.0	<0.76	<1.6
	5/2/2006	**7.30**	<0.22	<0.23		<0.11	<0.25	<0.19	0.80
	8/9/2006	**5.60**	<0.22	<0.23	<0.50	<0.11	<0.25	<0.19	0.57
	5/21/2007	**9.00**	<0.44	<0.46		<0.22	<0.50	<0.38	<0.78
	10/17/2007	*1.70*	<0.44	<0.46		<0.22	<0.50	<0.38	<0.78
	1/24/2008	**11.00**	<0.22	0.38	<0.50	<0.11	<0.25	<0.19	0.51
MW-8	5/25/2004	<0.25	<0.22	<0.23		<0.11	<0.25	<0.19	<0.39
	9/1/2004	<0.25	<0.22	<0.23		<0.11	<0.25	<0.19	<0.39
	2/8/2006	<0.25	<0.22	<0.23		<0.11	<0.25	<0.19	<0.39
	5/2/2006	<0.25	<0.22	<0.23		<0.11	<0.25	<0.19	<0.39
	8/9/2006	<0.25	<0.22	<0.23	<0.50	<0.11	<0.25	<0.19	0.57
	5/21/2007	<0.25	<0.22	<0.23		<0.11	<0.25	<0.19	<0.39
	10/17/2007	<0.25	<0.22	<0.23		<0.11	<0.25	<0.19	<0.39
	1/24/2008	<0.25	<0.22	<0.23	<0.50	<0.11	<0.25	<0.19	<0.39
MW-9	10/17/2007	*2.30*	<0.22	<0.23		<0.11	<0.25	<0.19	<0.44
	1/24/2008	**190.00**	6.80	3.4	0.63	0.91	2.10	0.52	16.00
	4/22/2008	<0.25	<0.22	<0.23	<0.50	<0.11	<0.25	<0.19	<0.39
P-1	5/25/2004	**36**	0.31	<0.23		<0.11	<0.25	<0.19	<0.39
	9/1/2004	**44**	<0.22	<0.23		<0.11	<0.25	<0.19	<0.39
	2/8/2006	<1.2	<1.1	<1.2		<0.55	<1.2	<0.95	<2
	5/2/2006	*4.40*	<0.22	<0.23		<0.11	<0.25	<0.19	0.67
	8/9/2006	**5.00**	<0.22	<0.23		<0.11	<0.25	<0.19	0.57
	5/21/2007	*4.80*	3.50	<0.23	<0.50	<0.11	<0.25	<0.19	<0.39
	10/17/2007	*1.40*	0.78	<0.23		<0.11	<0.25	<0.19	<0.39
	1/24/2008	*1.90*	0.22	<0.23	<0.50	<0.11	<0.25	<0.19	<0.39
P-2	5/25/2004	*0.94*	<0.22	<0.23		<0.11	<0.25	<0.19	<0.39
	9/1/2004	0.35	<0.22	<0.23		<0.11	<0.25	<0.19	<0.39
	5/2/2006	**5.10**	<0.22	<0.23		<0.11	<0.25	<0.19	0.45
	8/9/2006	**4.20**	<0.22	<0.23	<0.5	<0.11	<0.25	<0.19	0.57
	5/21/2007	<0.25	<0.22	<0.23		<0.11	<0.25	<0.19	<0.39
	10/17/2007	<0.25	<0.22	<0.23		<0.11	<0.25	<0.19	<0.39
	1/24/2008	0.34	<0.22	<0.23	<0.50	<0.11	<0.25	<0.19	<0.39
P-3	10/17/2007	<0.25	<0.22	<0.23		<0.11	<0.25	<0.19	<0.39
	1/24/2008	<0.25	<0.22	<0.23	<0.50	<0.11	<0.25	<0.19	<0.39
OFFICE WATER SUPPLY POTABLE WELL MJ302	5/25/2004	<0.25	<0.22	<0.23		<0.11	<0.25	<0.19	<0.39
	9/1/2004	<0.25	<0.22	<0.23		<0.11	<0.25	<0.19	<0.39
	5/2/2006	<0.25	<0.22	<0.23		<0.11	<0.25	<0.19	<0.39
	8/9/2006	<0.25	<0.22	<0.23	<0.50	<0.11	<0.25	<0.19	0.57
	5/21/2007	<0.25	<0.22	<0.23		<0.11	<0.25	<0.19	<0.39
	10/17/2007	<0.25	<0.22	<0.23		<0.11	<0.25	<0.19	<0.39
	1/24/2008	<0.25	<0.22	<0.23	<0.50	<0.11	<0.25	<0.19	<0.39
SHOP WELL HI CAP 2120	11/21/2003	<0.20	<0.22	<0.23		<0.20	<0.20	<0.20	<0.50
	5/25/2004	<0.25	<0.22	<0.23		<0.11	<0.25	<0.19	<0.39
TRUCK WASH WELL HI CAP 2119	11/21/2003	<0.25	<0.22	<0.23		<0.11	<0.25	<0.19	<0.39
	5/25/2004	<0.25	<0.22	<0.23		<0.11	<0.25	<0.19	<0.39

TABLE 1
GRO, 1,2-DCA, EDB, NAPHTHALENE AND PVOC GROUND WATER ANALYSIS RESULTS
Yellow River Supply Co.
Turtle Lake, Wisconsin

Date Sampled	GWE, ft	GRO mg/L	1,2-DCA ug/L PAL=0.5 ES=5.0	EDB ug/L PAL=0.005 ES=0.05	Naphtha-lene ug/L PAL=8 ES=40	Benzene ug/L PAL=0.5 ES=5	Ethyl-benzene ug/L PAL=140 ES=700	MTBE ug/L PAL=12 ES=60	Toluene ug/L PAL=200 ES=1000	1,2,4-TMB ug/L PAL=96* ES=480*	1,3,5-TMB ug/L PAL=96* ES=480*	Xylenes ug/L PAL=1000 ES=10,000
Monitoring Well 1												
07/17/92	90.97	90				16	<1.0	<1.0	<1.0	4.0	2.4	7.9
09/28/92	90.07					<1.0	<1.0	<1.0	<1.0	<1.0	<1.0	<1.0
03/18/93	89.80	NA				4.3	<1.0	<1.0	<1.0	<1.0	<1.0	<1.0
06/09/93	90.77	NA				8.5	2.6	<1.0	<1.0	2.6	2.6	3
12/10/93	90.52					<1.0	<1.0	<10	<1.0	<5.0	<5.0	<1.0
03/03/94	90.19	NA				<1.0	<1.0	<1.0	<1.0	<1.0	<1.0	<1.0
06/22/94	90.77	NA				3.2	<1.0	<1.0	<1.0	<1.0	<1.0	<1.0
09/30/94	90.41	<50	<1.0	<1.0	<1.0	<1.0	<1.0	<1.0	<1.0	<1.0	<1.0	<1.0
12/09/94	90.11	NA				<1.0	<1.0	<1.0	<1.0	<1.0	<1.0	<1.0
04/19/95	90.48	NA				ND	6.3	ND	ND	1.0	1.6	3.1
07/26/95	90.72	NA				ND	ND	ND	ND	ND	ND	ND
11/02/95	91.32	NA				1.5	ND	ND	ND	ND	ND	ND
04/22/96	91.10					<1.0	<1.0	<1.0	<1.0	<1.0	<1.0	<1.0
04/01/97	90.90	<50				<0.5	<1.0	<1.0	<1.0	<1.0	<1.0	<1.0
10/08/97	90.78					<0.5	<1.0	<1.0	<1.0	<1.0	<1.0	<2.0
04/20/98	90.69					4.4	<0.22	<0.16	0.33	0.51	0.55	0.85
04/20/98						4.2	<0.22	<0.16	<0.20	0.36	0.48	0.59
10/15/98	90.15	72				5.0	<0.22	<0.16	<0.20	3.6	0.53	1.6
06/21/99	90.47					4.0	<0.22	<0.16	<0.20	<0.22	<0.29	1.3
10/18/99	90.14	<50				2.3	<0.22	<0.16	<0.20	<0.22	<0.29	0.39
04/18/00	89.96					1.9	0.84	<0.25	0.14	1.8	0.49	0.90
10/13/00	89.65	<50				0.23	<0.22	<0.16	<0.20	<0.22	<0.29	<0.23
10/24/01	90.33	<50				<0.13	<0.22	<0.16	<0.20	<0.22	<0.29	<0.23
11/21/03	90.45					<0.25	<0.22	<0.23	<0.11	<0.25	<0.19	<0.39
02/26/04	89.89					0.51	<0.22	<0.23	0.12	<0.25	<0.19	0.60
05/25/04	90.69					0.33	<0.22	<0.23	<0.11	<0.25	<0.19	<0.39
09/01/04	90.35					<0.25	<0.22	<0.23	<0.11	<0.25	<0.19	<0.39
02/08/06	89.80					<0.25	<0.22	<0.23	<0.11	0.49	<0.19	<0.39
05/02/06	90.48					<0.25	<0.22	<0.23	<0.11	<0.25	<0.19	<0.39
08/09/06	89.58					<0.25	<0.22	<0.23	<0.11	<0.25	<0.19	<0.39

Date Sampled	GWE, ft	GRO mg/L	1,2-DCA ug/L PAL=0.5 ES=5.0	EDB ug/L PAL=0.005 ES=0.05	Naphtha-lene ug/L PAL=8 ES=40	Benzene ug/L PAL=0.5 ES=5	Ethyl-benzene ug/L PAL=140 ES=700	MTBE ug/L PAL=12 ES=60	Toluene ug/L PAL=200 ES=1000	1,2,4-TMB ug/L PAL=96* ES=480*	1,3,5-TMB ug/L PAL=96* ES=480*	Xylenes ug/L PAL=1000 ES=10,000
Monitoring Well 1												
05/21/07	89.30					<0.50	3.5	<0.46	<0.22	8.2	2.9	13
10/17/07	89.33					<0.25	0.78	<0.23	0.13	1.4	<0.19	1.4
01/24/08	88.71				<0.50	<0.25	0.22	<0.23	<0.11	<0.25	<0.19	<0.39
Monitoring Well 1P												
07/26/95	90.06	750	<5.0	<40	<16	400	130	ND	31	27	ND	24
11/02/95	90.90	NA				26	34	ND	ND	ND	ND	ND
04/22/96	90.52					110	69	2.6	3.2	11	<1.0	16
04/01/97	90.36	75.3				25.7	9.7	<1.0	<1.0	<1.0	<1.0	<1.0
10/08/97	90.21					60.4	90.1	<1.0	<1.0	6.68	<1.0	<2.94
04/20/98	90.14					69	42	<0.40	0.94	3.5	<0.29	2.3
10/15/98	89.59	850				130	200	2.9	5.5	21	3.6	29
06/21/99	89.87					120	100	<0.80	2.3	12	<0.29	6.1
10/18/99	89.53	1100				140	180	3.7	3.4	28	3.0	30
04/18/00	89.23					43	11	<0.25	1.9	0.69	<0.10	6.3
10/13/00	89.05	100				27	17	<0.16	<0.20	<0.22	<0.29	<0.23
10/24/01	89.91	580				48	85	<0.43	3.5	11	<0.29	5.0
11/21/03	89.76					120	100	<0.23	4.7	34	4.7	16
02/26/04	89.10					28	<0.22	<0.23	0.18	<0.25	<0.19	<0.39
05/25/04	89.93					36	0.31	<0.23	<0.11	<0.25	<0.19	<0.39
09/01/04	89.66					44	<0.22	<0.23	<0.11	<0.25	<0.19	<0.39
02/08/06	89.10					<1.2	<1.1	<1.2	<0.55	<1.2	<0.95	<2.0
05/02/06	89.73					4.4	<0.22	<0.23	<0.11	<0.25	<0.19	0.67
08/09/06	89.14				<0.50	5.0	<0.22	<0.23	<0.11	<0.25	<0.19	0.57
05/21/07	88.46					4.8	<0.22	<0.23	<0.11	<0.25	<0.19	<0.39
10/17/07	88.66					1.4	<0.22	<0.23	<0.11	<0.25	<0.19	<0.39
01/24/08	87.97				<0.50	1.9	<0.22	<0.23	<0.11	<0.25	<0.19	<0.39
Monitoring Well 2												
07/17/92	90.65	<50				<1.0	<1.0	<1.0	<1.0	<1.0	<1.0	<1.0
09/28/92	90.20					<1.0	<1.0	<1.0	<1.0	<1.0	<1.0	<1.0
03/18/93	89.51	NA				<1.0	<1.0	<1.0	<1.0	<1.0	<1.0	<1.0
06/09/93	90.46	NA				<1.0	<1.0	<1.0	<1.0	<1.0	<1.0	<1.0
12/10/93	90.18					<1.0	<1.0	<10	<1.0	<5.0	<5.0	<1.0
03/03/94	88.89	NA				<1.0	<1.0	<1.0	<1.0	<1.0	<1.0	<1.0
06/22/94	90.45	NA				<1.0	<1.0	<1.0	<1.0	<1.0	<1.0	<1.0

Date Sampled	GWE, ft	GRO mg/L	1,2-DCA ug/L PAL=0.5 ES=5.0	EDB ug/L PAL=0.005 ES=0.05	Naphtha-lene ug/L PAL=8 ES=40	Benzene ug/L PAL=0.5 ES=5	Ethyl-benzene ug/L PAL=140 ES=700	MTBE ug/L PAL=12 ES=60	Toluene ug/L PAL=200 ES=1000	1,2,4-TMB ug/L PAL=96* ES=480*	1,3,5-TMB ug/L PAL=96* ES=480*	Xylenes ug/L PAL=1000 ES=10,000
Monitoring Well 2												
09/30/94	90.06	<50	<1.0	<1.0	<1.0	<1.0	<1.0	<1.0	<1.0	<1.0	<1.0	<1.0
12/09/94	89.74	NA				<1.0	<1.0	<1.0	<1.0	<1.0	<1.0	<1.0
04/19/95	90.16	NA				ND	1.0	ND	ND	4.1	1.4	ND
07/26/95	90.31	NA				ND	ND	ND	ND	ND	ND	ND
11/02/95	90.98	NA				ND	ND	ND	ND	ND	ND	ND
04/22/96	90.76					<1.0	<1.0	<1.0	<1.0	<1.0	<1.0	<1.0
04/01/97	90.60	51.2				<0.5	<1.0	<1.0	<1.0	<1.0	<1.0	<1.0
04/01/97		<50				<0.5	<1.0	<1.0	<1.0	<1.0	<1.0	<1.0
10/08/97	80.41					<0.5	<1.0	<1.0	<1.0	<1.0	<1.0	<2.0
04/20/98	90.34					0.39	<0.22	<0.16	0.31	<0.22	<0.29	0.64
10/15/98	89.80	<50				<0.13	<0.22	<0.16	<0.20	<0.22	<0.29	<0.23
06/21/99	90.13					<0.13	0.25	<0.16	<0.20	<0.22	<0.29	1.4
10/18/99	89.81	60				<0.13	0.26	<0.16	<0.20	<0.22	<0.29	0.77
04/18/00	89.55					<0.13	2.0	<0.16	<0.20	2.4	0.19	1.4
10/13/00	89.35	<50				<0.13	<0.22	<0.16	<0.20	<0.22	<0.29	<0.23
10/24/01	90.01	<50				<0.13	<0.22	<0.16	<0.02	<0.22	<0.29	<0.23
11/21/03	90.09					<0.25	<0.22	<0.23	<0.11	<0.25	<0.19	<0.39
02/26/04	89.55					<0.25	0.23	<0.23	<0.11	<0.25	<0.19	<0.39
05/25/04	90.32					<0.25	0.74	<0.23	<0.11	0.39	<0.19	<0.39
09/01/04	90.02					<0.25	<0.22	<0.23	<0.11	<0.25	<0.19	<0.39
02/08/06	89.58					<2.0	<1.8	<1.8	<0.88	<2.0	<1.5	<3.1
05/02/06	90.11					<0.25	0.34	<0.23	<0.11	0.39	0.20	<0.39
08/09/06	89.33				<1.0	<0.50	<0.44	<0.46	<0.22	<0.50	<0.38	<0.78
05/21/07	89.03					<0.50	1.3	<0.46	<0.22	0.96	<0.38	<0.78
10/17/07	89.07					<0.25	0.44	<0.23	0.15	<0.25	<0.19	0.40
01/24/08	88.43				<0.50	<0.25	<0.22	<0.23	<0.11	<0.25	<0.19	<0.39
Monitoring Well 2P												
07/26/95	89.68	ND	0.6	<4.0	<1.6	4.5	ND	2.4	.8	ND	ND	ND
11/02/95	91.81	NA				2.0	ND	ND	ND	ND	ND	ND
04/22/96	90.13					<1.0	<1.0	<1.0	<1.0	<1.0	<1.0	<1.0
04/22/96						<1.0	<1.0	<1.0	<1.0	<1.0	<1.0	<1.0
04/01/97	89.99	<50				<0.5	<1.0	<1.0	<1.0	<1.0	<1.0	<1.0
10/08/97	89.80					<0.5	<1.0	<1.0	<1.0	<1.0	<1.0	<2.0
04/20/98	89.70					0.21	<0.22	<0.16	<0.20	<0.22	<0.29	<0.23
10/15/98	89.17	<50				<0.13	<0.22	<0.16	<0.20	<0.22	<0.29	<0.23

Date Sampled	GWE, ft	GRO mg/L	1,2-DCA ug/L PAL=0.5 ES=5.0	EDB ug/L PAL=0.005 ES=0.05	Naphtha-lene ug/L PAL=8 ES=40	Benzene ug/L PAL=0.5 ES=5	Ethyl-benzene ug/L PAL=140 ES=700	MTBE ug/L PAL=12 ES=60	Toluene ug/L PAL=200 ES=1000	1,2,4-TMB ug/L PAL=96* ES=480*	1,3,5-TMB ug/L PAL=96* ES=480*	Xylenes ug/L PAL=1000 ES=10,000
Monitoring Well 2P												
06/21/99	89.52					0.20	<0.22	<0.16	<0.20	<0.22	<0.29	<0.23
10/18/99	89.14	<50				<0.13	<0.22	<0.16	<0.20	<0.22	<0.29	<0.23
04/18/00	88.89					<0.13	<0.22	<0.16	<0.20	<0.22	<0.29	<0.23
10/13/00	88.60	<50				<0.13	<0.22	<0.16	<0.20	<0.22	<0.29	<0.23
10/24/01	89.41	<50				<0.10	<0.25	<0.25	<0.10	<0.10	<0.10	<0.25
11/21/03	89.33		<0.50	<0.20	<0.25	0.79	<0.50	<0.50	<0.20	<0.20	<0.20	<0.50
02/26/04	88.78					0.65	<0.22	<0.23	<0.11	<0.25	<0.19	<0.39
05/25/04	89.54					0.94	<0.22	<0.23	<0.11	<0.25	<0.19	<0.39
09/01/04	89.22					0.35	<0.22	<0.23	<0.11	<0.25	<0.19	<0.39
02/08/06	88.84											
05/02/06	89.41					5.1	<0.22	<0.23	<0.11	<0.25	<0.19	0.42
08/09/06	88.83				<0.50	4.2	<0.22	<0.23	<0.11	<0.25	<0.19	0.57
05/21/07	88.26					<0.25	<0.22	<0.23	<0.11	<0.25	<0.19	<0.39
10/17/07	88.33					<0.25	<0.22	<0.23	<0.11	<0.25	<0.19	<0.39
01/24/08	87.72				<0.50	0.34	<0.22	<0.23	<0.11	<0.25	<0.19	<0.39
Monitoring Well 3												
07/17/92	91.07	130000				37000	2100	<250	33000	940	250	8800
09/28/92	90.56					58000	3400	4500	50000	<1000	<1000	10000
03/18/93	89.75	NA				34000	1900	2100	28000	950	<500	6600
06/09/93	90.77	NA				41000	1900	2700	35000	1000	<1000	6300
12/10/93	89.00					48400	2840	<5000	44000	<2500	<2500	11000
03/03/94	90.11	NA				9900	750	540	6600	450	290	2000
06/22/94	90.78	NA				43000	2400	1800	41000	940	<500	7700
09/30/94	90.40	160000	<200	<200	300	47000	3000	2000	44000	1400	420	12000
12/09/94	90.06	NA				29000	1500	1300	24000	700	<500	5500
04/19/95	90.35	NA				9900	1200	1200	6800	750	270	3300
07/26/95	90.73	NA				19000	1700	1400	16000	1200	380	6100
11/02/95	91.44	NA				16000	1300	810	14000	830	260	5100
04/22/96	91.14					4000	450	340	250	300	110	1100
10/08/97	90.80					37800	2270	<25	37300	1080	277	10800
04/20/98	90.73					15000	1300	<100	15000	730	230	5100
10/15/98	90.15	27000				8400	920	280	6900	610	180	3000
06/21/99	90.46					21000	1500	340	20000	690	190	6100
04/18/00	89.78					6800	260	160	2000	150	36	680
10/13/00	89.57	68000				24000	1600	200	22000	700	150	6200

Date Sampled	GWE, ft	GRO mg/L	1,2-DCA ug/L PAL=0.5 ES=5.0	EDB ug/L PAL=0.005 ES=0.05	Naphtha-lene ug/L PAL=8 ES=40	Benzene ug/L PAL=0.5 ES=5	Ethyl-benzene ug/L PAL=140 ES=700	MTBE ug/L PAL=12 ES=60	Toluene ug/L PAL=200 ES=1000	1,2,4-TMB ug/L PAL=96* ES=480*	1,3,5-TMB ug/L PAL=96* ES=480*	Xylenes ug/L PAL=1000 ES=10,000
Monitoring Well 3												
10/24/01	90.34	28000				11000	920	<24	9300	520	110	3300
11/21/03	90.26					10000	990	<23	10000	500	140	3600
02/26/04	89.59					16000	1500	140	17000	850	240	6000
05/25/04	90.46					6900	690	96	5800	350	98	2200
09/01/04	90.16					26000	1600	<140	27000	760	210	6700
02/08/06	89.57					3100	350	50	1400	180	61	930
05/02/06	90.28					16000	1500	<9.2	17000	760	200	6400
08/09/06	89.49				240	19000	160	120	18000	760	220	6200
05/21/07	89.06					16000	1100	110	13000	470	130	4000
10/17/07	89.09					7000	720	86	3700	320	100	2000
01/24/08	88.39				<0.50	9200	900	80	8300	620	200	3900
Monitoring Well 3P												
10/17/07	87.94					<0.25	<0.22	<0.23	<0.11	<0.25	<0.19	<0.39
01/24/08	87.37				<0.50	<0.25	<0.22	<0.23	<0.11	<0.25	<0.19	<0.39
Monitoring Well 4												
07/17/92	91.22	<50				<1.0	<1.0	<1.0	<1.0	<1.0	<1.0	<1.0
09/28/92	90.46					<1.0	<1.0	<1.0	<1.0	<1.0	<1.0	<1.0
03/18/93	89.58	NA				16	12	<1.0	<1.0	15	<1.0	15
06/09/93	90.65	NA				12	39	<1.0	3.1	19	8.6	35
12/10/93	90.30					<1.0	3.2	<10	<1.0	<5.0	<5.0	<1.0
03/03/94	89.97	NA				6.1	100	<2.0	5.1	41	26	54
06/22/94	90.69	NA				5.9	32	<1.0	1.1	2	14	26
09/30/94	90.28	540	<1.0	<1.0	<1.0	2.4	26	<1.0	<1.0	<1.0	1.2	<1.0
12/09/94	89.93	NA				2.6	9.2	<1.0	<1.0	<1.0	<1.0	<1.0
07/26/95	90.69	NA				ND	ND	ND	ND	ND	ND	ND
11/02/95	91.47	NA				ND	ND	ND	ND	ND	ND	ND
04/22/96	91.15					<1.0	<1.0	<1.0	<1.0	<1.0	<1.0	<1.0
04/01/97	90.86	<50				<0.5	<1.0	<1.0	<1.0	<1.0	<1.0	<1.0
10/08/97	90.91					<0.5	<1.0	<1.0	<1.0	<1.0	<1.0	<2.0
04/20/98	90.74					<0.13	<0.22	<0.16	<0.20	<0.22	<0.29	<0.23
10/15/98		<50				<0.13	<0.22	<0.16	<0.20	<0.22	<0.29	<0.23
10/15/98	90.13	<50				<0.13	<0.22	<0.16	<0.20	<0.22	<0.29	<0.23
06/21/99						<0.13	<0.22	<0.16	<0.20	<0.22	<0.29	<0.23
06/21/99	90.54					<0.13	<0.22	<0.16	<0.20	<0.22	<0.29	<0.23

Date Sampled	GWE, ft	GRO mg/L	1,2-DCA ug/L PAL=0.5 ES=5.0	EDB ug/L PAL=0.005 ES=0.05	Naphtha-lene ug/L PAL=8 ES=40	Benzene ug/L PAL=0.5 ES=5	Ethyl-benzene ug/L PAL=140 ES=700	MTBE ug/L PAL=12 ES=60	Toluene ug/L PAL=200 ES=1000	1,2,4-TMB ug/L PAL=96* ES=480*	1,3,5-TMB ug/L PAL=96* ES=480*	Xylenes ug/L PAL=1000 ES=10,000
Monitoring Well 4												
10/18/99		<50				<0.13	<0.22	<0.16	<0.20	<0.22	<0.29	<0.23
10/18/99	90.09	<50				<0.13	<0.22	<0.16	<0.20	<0.22	<0.29	<0.23
04/15/00	89.77					<0.13	<0.22	<0.16	<0.20	<0.22	<0.29	<0.23
10/13/00	89.55	<50				0.18	<0.22	<0.16	<0.20	<0.22	<0.29	<0.23
10/24/01	90.48	<50				<0.13	<0.22	<0.16	0.37	<0.22	<0.29	0.32
11/21/03	90.38					<0.25	<0.22	<0.23	<0.11	<0.25	<0.19	<0.39
02/26/04	89.67					<0.25	<0.22	<0.23	0.12	<0.25	<0.19	<0.39
05/25/04	90.60					<0.25	<0.22	<0.23	<0.11	<0.25	<0.19	<0.39
09/01/04	90.24					<0.25	<0.22	<0.23	<0.11	<0.25	<0.19	<0.39
Monitoring Well 5												
07/17/92	90.39	54000				15000	2300	<100	17000	580	150	6400
09/28/92	89.88					21000	2700	<250	25000	580	<250	7400
03/18/93	88.99	NA				19000	3200	<500	29000	<500	<500	5100
06/09/93	89.94	NA				5900	880	<1000	7200	200	<100	2100
03/03/94	89.33	NA				15000	2600	<500	24000	620	<500	7400
06/22/94	89.80	NA				3100	490	<50	4200	94	<50	1400
09/30/94	89.66	49000	<100	<100	<100	10000	2100	<100	15000	590	170	6200
12/09/94	89.37	NA				14000	3000	<100	16000	820	220	9000
04/19/95	89.66	NA				6300	1400	ND	8300	460	130	4500
07/26/95	90.40	NA				120	21	ND	140	7.6	63	63
11/02/95	90.77	NA				13000	3300	ND	17000	1000	320	9500
04/22/96	90.40					1500	390	34	2300	97	27	210
04/01/97	90.35	47600				11500	3100	<100	17400	950	228	9430
10/08/97	90.26					10400	3110	<250	16700	892	<250	9740
04/20/98	90.08					1100	350	<11	1500	120	65	1000
10/15/98	89.54	41000				7900	2800	22	14000	910	220	9000
06/21/99	89.87					3100	1300	30	5900	400	94	3900
10/18/99	89.50	24000				6000	1800	20	9300	650	140	5800
04/18/00	89.19					4400	1800	<50	5600	620	120	5600
10/13/00	89.05	45000				6300	3500	<16	13000	1200	250	10000
10/24/01	89.82	35000				3800	3200	<32	9000	1100	290	9100
11/21/03	89.76					2400	3000	<9.2	5200	1100	260	8800
02/26/04	89.06					2600	3000	<9.2	4800	1000	250	8900
05/25/04	89.92					440	420	<9.2	700	130	23	1000
09/01/04	89.64					2300	2500	<12	4700	840	200	7300

Date Sampled	GWE, ft	GRO mg/L	1,2-DCA ug/L PAL=0.5 ES=5.0	EDB ug/L PAL=0.005 ES=0.05	Naphtha-lene ug/L PAL=8 ES=40	Benzene ug/L PAL=0.5 ES=5	Ethyl-benzene ug/L PAL=140 ES=700	MTBE ug/L PAL=12 ES=60	Toluene ug/L PAL=200 ES=1000	1,2,4-TMB ug/L PAL=96* ES=480*	1,3,5-TMB ug/L PAL=96* ES=480*	Xylenes ug/L PAL=1000 ES=10,000
Monitoring Well 5												
02/08/06	89.15					1900	2700	<9.2	3300	970	230	7900
05/02/06	89.77					430	470	<9.2	620	170	34	1200
08/09/06	89.20				30	580	480	<1.8	510	160	27	1300
05/21/07	88.52					810	1100	<4.6	1200	350	67	2800
10/17/07	88.64					1400	2100	<4.6	2000	770	180	5900
01/24/08	87.95				220	1600	2500	<4.6	1800	950	220	6900
Monitoring Well 6												
07/26/95	90.19	83	<2.5	<20	<8.0	65	ND	ND	17	ND	ND	13
11/02/95	90.64	NA				27	3.3	ND	3.8	1.6	ND	7
04/22/96	90.87					260	9.5	5.4	130	1.3	<1.0	30
04/01/97	90.55	3280				1580	109	<10	1030	22.2	<10	408
10/08/97	89.81					761	76.5	<1.0	41.6	21.2	4.90	173.5
10/08/97						774	79.8	<1.0	60.4	21.7	5.06	191.0
04/20/98	90.12					1600	110	<8.0	830	27	7.4	330
10/15/98	89.44	2700				1500	94	5.4	220	26	9.9	330
06/21/99	89.83					200	13	<0.80	1.1	5.0	1.0	28
10/18/99	89.36	1200				740	20	4.0	140	4.7	<2.9	56
04/18/00	89.48					660	42	16	30	14	3.2	110
10/13/00	88.92	450				360	9.6	<1.6	6.9	5.3	<2.9	34
10/24/01	89.70	1800				1100	49	<1.4	170	17	4.4	190
11/21/03	89.57					18000	1100	<58	11000	270	60	4000
05/25/04	89.72					6400	460	40	3700	140	41	1800
09/01/04	89.55					4100	290	26	410	99	20	1100
02/08/06	88.91					2000	120	15	250	53	14	600
05/02/06	89.81					910	47	<10	8.2	42	9.1	280
08/09/06	88.99				12	1700	120	16	290	50	11	500
05/21/07	88.43					650	25	6.4	6.2	18	4.8	160
10/17/07	88.68					140	4.6	1.4	1.4	8.6	2.2	55
Monitoring Well 7												
07/26/95	89.59	ND	<2.5	<20	<8.0	2.9	ND	ND	17	ND	ND	ND
11/02/95	90.87	NA				ND	ND	ND	ND	ND	ND	ND
04/22/96	90.26					3.1	<1.0	<1.0	<1.0	<1.0	<1.0	<1.0
04/01/97	90.23	<50				0.6	<1.0	<1.0	<1.0	<1.0	<1.0	<1.0
10/08/97	89.89					<0.5	<1.0	<1.0	<1.0	6.68	<1.0	<1.0

Date Sampled	GWE, ft	GRO mg/L	1,2-DCA ug/L PAL=0.5 ES=5.0	EDB ug/L PAL=0.005 ES=0.05	Naphtha-lene ug/L PAL=8 ES=40	Benzene ug/L PAL=0.5 ES=5	Ethyl-benzene ug/L PAL=140 ES=700	MTBE ug/L PAL=12 ES=60	Toluene ug/L PAL=200 ES=1000	1,2,4-TMB ug/L PAL=96* ES=480*	1,3,5-TMB ug/L PAL=96* ES=480*	Xylenes ug/L PAL=1000 ES=10,000
Monitoring Well 7												
04/20/98	90.04					4.7	<0.22	<0.16	<0.20	<0.22	<0.29	0.28
10/15/98	89.66	<50				<0.29	<0.22	<0.16	<0.20	<0.22	<0.29	<0.23
06/21/99	89.89					0.61	<0.22	<0.16	<0.20	<0.22	<0.29	0.95
10/18/99	89.28	<50				0.39	<0.22	<0.16	<0.20	<0.22	<0.29	0.25
04/18/00	89.69					4.7	<0.22	<0.16	<0.20	<0.22	<0.29	<0.25
10/13/00	88.80	<50				0.68	<0.22	<0.16	<0.20	<0.22	<0.29	<0.23
10/24/01	90.30	<50				0.69	0.55	<0.16	0.61	4.1	11	3.5
11/21/03	90.56					35	1.3	<0.46	0.44	<0.50	<0.38	3.4
02/26/04	88.71					2100	55	13	40	4.3	2.1	170
05/25/04	90.52					21	0.31	<0.23	0.13	<0.25	<0.19	1.6
09/01/04	89.55					38	<0.22	<0.23	<0.11	<0.25	<0.19	2.1
02/08/06	89.57					4.4	<0.88	<0.92	<0.44	<1.0	<0.76	<1.6
05/02/06	90.37					7.3	<0.22	<0.23	<0.11	<0.25	<0.19	0.80
08/09/06	89.30				<0.50	5.6	<0.22	<0.23	<0.11	<0.25	<0.19	0.57
05/21/07	88.43					9.0	<0.44	<0.46	<0.22	<0.50	<0.38	<0.78
10/17/07	89.71					1.7	<0.44	<0.46	<0.22	<0.50	<0.38	<0.78
01/24/08	87.60				<0.50	11	<0.22	0.38	<0.11	<0.25	<0.19	0.51
Monitoring Well 8												
01/28/99	88.71					<0.31	<0.38	2.9	<0.39	<0.32	<0.33	<0.46
06/21/99	89.39					<0.13	<0.22	1.5	<0.20	<0.22	<0.29	1.2
10/18/99	88.98	<50				<0.13	<0.22	<0.16	<0.20	<0.22	<0.29	1.1
04/18/00	88.96					<0.13	<0.22	<0.16	<0.20	<0.22	<0.29	<0.25
10/13/00	88.61	<50				<0.13	<0.22	<0.16	<0.20	<0.22	<0.29	<0.23
10/24/01	89.34	<50				<0.13	<0.22	<0.16	<0.20	<0.22	<0.29	<0.23
11/21/03	89.39					<0.25	<0.22	<0.23	<0.11	<0.25	<0.19	<0.39
02/26/04	88.84					<0.25	<0.22	<0.23	<0.11	<0.25	<0.19	<0.39
05/25/04	89.77					<0.25	<0.22	<0.23	<0.11	<0.25	<0.19	<0.39
09/01/04	89.26					<0.25	<0.22	<0.23	<0.11	<0.25	<0.19	<0.39
02/08/06	88.94					<0.25	<0.22	<0.23	<0.11	<0.25	<0.19	<0.39
05/02/06	89.62					<0.25	<0.22	<0.23	<0.11	<0.25	<0.19	<0.39
08/09/06	88.88				<0.50	<0.25	<0.22	<0.23	<0.11	<0.25	<0.19	0.57
05/21/07	88.41					<0.25	<0.22	<0.23	<0.11	<0.25	<0.19	<0.39
10/17/07	88.82					<0.25	<0.22	<0.23	<0.11	<0.25	<0.19	<0.39
01/24/08	87.81				<0.50	<0.25	<0.22	<0.23	<0.11	<0.25	<0.19	<0.39

Date Sampled	GWE, ft	GRO mg/L	1,2-DCA ug/L PAL=0.5 ES=5.0	EDB ug/L PAL=0.005 ES=0.05	Naphtha-lene ug/L PAL=8 ES=40	Benzene ug/L PAL=0.5 ES=5	Ethyl-benzene ug/L PAL=140 ES=700	MTBE ug/L PAL=12 ES=60	Toluene ug/L PAL=200 ES=1000	1,2,4-TMB ug/L PAL=96* ES=480*	1,3,5-TMB ug/L PAL=96* ES=480*	Xylenes ug/L PAL=1000 ES=10,000
Monitoring Well 9												
10/17/07	87.88					2.3	<0.22	<0.23	<0.11	<0.25	<0.19	0.44
01/24/08	87.32				0.63	190	6.8	3.4	0.91	2.1	0.52	16
04/22/08	88.04				<0.50	<0.25	<0.22	<0.23	<0.11	<0.25	<0.19	<0.39
Monitoring Well HI CAP 1 – SHOP WELL HC 02120												
11/21/03						<0.20	<0.22	<0.23	<0.20	<0.20	<0.20	<0.50
05/25/04						<0.25	<0.22	<0.23	<0.11	<0.25	<0.19	<0.39
Monitoring Well HI CAP 2 – TRUCK WASH WELL HC02119												
11/21/03						<0.25	<0.22	<0.23	<0.11	<0.25	<0.19	<0.39
05/25/04						<0.25	<0.22	<0.23	<0.11	<0.25	<0.19	<0.39
Monitoring Well POND												
04/22/96		<50				<1.0	<1.0	<1.0	<1.0	<1.0	<1.0	<1.0
11/21/03	90.63					<0.25	<0.22	<0.23	<0.11	<0.25	<0.19	<0.39
05/25/04	90.67					<0.25	<0.22	<0.23	<0.11	<0.25	<0.19	<0.39
09/01/04	89.61					<0.25	<0.22	<0.23	<0.11	<0.25	<0.19	<0.39
05/02/06						<0.25	<0.22	<0.23	<0.11	<0.25	<0.19	<0.39
08/09/06	89.61				<0.50	<0.25	<0.22	<0.23	<0.11	<0.25	<0.19	0.57
05/21/07						<0.25	<0.22	<0.23	<0.11	<0.25	<0.19	<0.39
10/17/07						<0.25	<0.22	<0.23	<0.11	<0.25	<0.19	<0.39
Monitoring Well SUPPLY WELL MJ302												
04/22/96		<50				<1.0	<1.0	<1.0	<1.0	<1.0	<1.0	<1.0
10/24/01			<0.25	<0.25	<0.25	<0.10	<0.25	<0.25	<0.10	<0.10	<0.10	<0.25
11/21/03			<0.50	<0.20	<0.25	<0.20	<0.50	<0.50	<0.20	<0.20	<0.20	<0.50
02/26/04						<0.25	<0.22	<0.23	<0.11	<0.25	<0.19	<0.39
05/25/04						<0.25	<0.22	<0.23	<0.11	<0.25	<0.19	<0.39
09/01/04						<0.25	<0.22	<0.23	<0.11	<0.25	<0.19	<0.39
02/08/06												
05/02/06						<0.25	<0.22	<0.23	<0.11	<0.25	<0.19	<0.39
08/09/06					<0.50	<0.25	<0.22	<0.23	<0.11	<0.25	<0.19	0.57
05/21/07						<0.25	<0.22	<0.23	<0.11	<0.25	<0.19	<0.39
10/17/07						<0.25	<0.22	<0.23	<0.11	<0.25	<0.19	<0.39
01/24/08					<0.50	<0.25	<0.22	<0.23	<0.11	<0.25	<0.19	<0.39

DRO = Diesel Range Organics
MTBE = Methyl-Tert-Butyl Ether

ES = Enforcement Standard (NR 140)
ug/L = micrograms per liter = parts per billion

EDB = 1,2 - Dibromoethane
FB = Field Blank

Date Sampled	GWE, ft	GRO mg/L	1,2-DCA ug/L PAL=0.5 ES=5.0	EDB ug/L PAL=0.005 ES=0.05	Naphtha-lene ug/L PAL=8 ES=40	Benzene ug/L PAL=0.5 ES=5	Ethyl-benzene ug/L PAL=140 ES=700	MTBE ug/L PAL=12 ES=60	Toluene ug/L PAL=200 ES=1000	1,2,4-TMB ug/L PAL=96* ES=480*	1,3,5-TMB ug/L PAL=96* ES=480*	Xylenes ug/L PAL=1000 ES=10,000

TMB = Trimethylbenzene
1,2-DCA = 1,2-Dichloroethane
PAL = Preventive Action Limit (NR 140)

mg/L = milligrams per liter = parts per million
NA = Not Analyzed
* = 1,2,4-TMB and 1,3,5-TMB combined

TB = Trip Blank
GWE = Ground Water Elevation, ft

I://working/grdcapbpv

DATE	GROUND WATER ELEVATIONS											
	MONITORING WELL/PIEZOMETER											
	MW-1	MW-2	MW-3	MW-4	MW-5	MW-6	MW-7	MW-8	MW-9	P-1	P-2	P-3
07/17/1992	90.97	90.65	91.07	91.22	90.39							
09/28/1992	90.07	90.20	90.56	90.46	89.88							
03/17/1993	89.80	89.51	89.75	89.57	88.99							
06/09/1993	90.77	90.46	90.77	90.62	89.94							
09/22/1993	90.88	90.57	90.89	90.75	90.14							
12/10/1993	90.52	90.18	89.00	90.30								
03/03/1994	90.19	88.89	90.11	89.97	89.33							
6/22/1994	90.77	90.45	90.78	90.69	89.80							
9/30/1994	90.41	90.06	90.40	90.28	89.66							
12/9/1994	90.11	89.79	90.06	89.93	89.37							
4/19/1995	90.48	90.16	90.35		89.66							
7/19/1995	90.65	90.24		88.77	83.83							
7/24/1995	90.72	90.31	90.73	90.69	90.40	90.19	89.59			90.06	89.68	
11/2/1995	91.32	90.98	91.44	91.47	90.77	90.64	90.87			90.90	91.81	
4/22/1996	91.11	90.76	91.14	91.15	90.40	90.87	90.26			90.52	90.13	
4/1/1997	90.90	90.60		90.86	90.35	90.55	90.23			90.36	89.99	
10/8/1997	90.78	90.41	90.80	90.91	90.26	89.81	89.89			90.21	89.80	
4/20/1998	90.69	90.34	90.73	90.74	90.08	90.12	90.04			90.14	89.70	
10/15/1998	90.15	89.80	90.15	90.13	89.54	89.44	89.66			89.59	89.17	
1/28/1999								88.71				
6/21/1999	90.47	90.13	90.46	90.54	89.87	89.83	89.89	89.39		89.87	89.52	
10/18/1999	90.14	89.81		90.09	89.50	89.36	89.28	88.98		89.53	89.14	
4/18/2000	89.86	89.55	89.78	89.77	89.19	89.48	89.69	88.96		89.23	88.89	
10/13/2000	89.65	89.36	89.57	89.55	89.05	88.92	88.80	88.61		89.05	88.60	
10/24/2001	90.33	90.01	90.34	90.48	89.82	89.70	90.30	89.34		89.91	89.41	
11/21/2003	90.45	90.09	90.26	90.38	89.76	89.57	90.56	89.39		89.76	89.33	
2/26/2004	89.89	89.55	89.59	89.67	89.06		88.71	88.84		89.10	88.78	
5/25/2004	90.69	90.32	90.46	90.60	89.92	89.72	90.52	89.77		89.93	89.54	
9/1/2004	90.35	90.02	90.16	90.24	89.64	89.55	89.55	89.26		89.66	89.22	
2/8/2006	89.80	89.58	89.57		89.15	88.91	89.57	88.94		89.10	88.87	
5/2/2006	90.48	90.11	90.28		89.77	89.81	90.37	89.62		89.73	89.41	
8/9/2006	89.58	89.33	89.49	89.20	89.20	88.99	89.30	88.88		89.14	88.83	
5/21/2007	89.30	89.03	89.06		88.52	88.43	88.43	88.41		88.46	88.26	
9/28/2007									87.74			87.49
10/17/2007	89.33	89.07	89.09		88.64	88.68	89.71	88.82	87.88	88.66	88.33	87.94
1/24/2008	88.71	88.43	88.39		87.95		87.60	87.81	87.32	87.97	87.72	87.37
4/22/2008									88.04			

September 17, 2008

Mr. Pat Bergin
Cemstone Ready-Mix, Inc.
2025 Center Point Boulevard
Mendota Heights, MN 55120

RE: Notification of Existing Soil and Groundwater Contamination
Beneath Former Yellow River Supply Company Property
Turtle Lake, Polk County, Wisconsin

Dear Mr. Bergin:

I have completed an environmental investigation and remediation at the Former Yellow River Supply Company at 153 150th Avenue, Turtle Lake, WI. In accordance with the conditions for case closure Wis. Admin. Code NR726, I am required to notify you as current property owner.

Groundwater and soil contamination that appears to have originated on the property located at 153 150th Avenue is currently present on your property. The levels of petroleum contamination in the ground water and soil on your property are above the State groundwater enforcement standards found in Chapter NR140 and NR726, Wisconsin Administrative Code. However, the environmental consultants who have investigated this contamination have determined that this groundwater contaminant plume is stable or receding and will naturally degrade over time. The soil contamination is not considered a direct contact threat. I believe that allowing natural attenuation to complete the clean-up at this site will meet the requirements for case closure that are found in Chapter NR726 and Chapter NR746 *(or Comm 46)*, Wisconsin Administrative Code, and I will be requesting that the Department of Natural Resources accept natural attenuation as the final remedy for this site and grant case closure. Closure means that the Department will not be requiring any further investigation or clean-up to be taken, other than the reliance on natural attenuation.

Neither you nor any subsequent owner of your property will be held responsible for investigation or cleanup of this groundwater contamination, as long as you and any subsequent owners comply with the requirements of Section 292.13, Wisconsin Statutes, including allowing access to your property for investigation or cleanup if access is required. To obtain a copy of the Department of Natural Resources' publication #RR-589, Fact Sheet 10: Guidance for Dealing with Properties Affected by Off-Site Contamination," you may visit http://www.dnr.state.wi.us/org/aw/rr/archives/pubs/RR589.pdf or call 608-267-3859.

The Department of Natural Resources will not review my final closure request for at least 30 days after the date of this letter. As an affected property owner, you have the right to contact the Department to provide any technical information that you may have that indicates that closure should not be granted at this site. If you would like to submit any information to the Wisconsin Department of Natural Resources that is relevant to the closure request, you should mail that information to: Wisconsin Department of Natural Resources, Phil Richards, 875 South 4th Avenue, Park Falls, WI 54552.

If this case is closed, all properties within the site boundaries where groundwater contamination exceeds Chapter NR140 groundwater enforcement standards will be listed on the Department of Natural Resources' geographic information system (GIS Registry) of Closed Remediation Sites. The information on the GIS Registry includes maps showing the location of properties in Wisconsin where groundwater contamination above Chapter NR140 Enforcement Standards was found at the time that the case was closed. This GIS Registry will be available to the general public on the Department of Natural Resources internet web site.

Once the Department makes a decision on my closure request, it will be documented in a letter. If the Department grants closure, you may obtain a copy of this letter by requesting a copy from me, by writing to the agency address given above or by accessing the DNR GIS Registry of Closed Remediation Sites on the internet at http://www.dnr.wi.gov/org/aw/rr/gis/index.htm A copy of the closure letter is included as part of the site file on the GIS Registry of Closed Remediation Sites.

Should you or any subsequent property owner wish to construct or reconstruct a well on your property, special well construction standards may be necessary to protect the well from the residual groundwater contamination. Any well driller who proposes to construct the well on your property in the future will first need to obtain approval from a regional water supply specialist in the DNR's Drinking Water and Groundwater program. The well construction application, form 3300-254, is on the internet at http://www.dnr.state.wi.us/org/water/dwg/3300254.pdf or may be accessed through the GIS Registry web address in the preceding paragraph.

If you need more information, you may contact me at ~~110~~ 210 Sommers Landing Road, North Hudson, WI 54016, 715-386-5766, or my environmental consultant (Scott McCurdy) at Cedar Corporation, 604 Wilson Avenue, Menomonie, WI 54751, 715-235-9081, or you may contact Phil Richards, 875 South 4th Avenue, Park Falls, WI 54552, 715-762-1352.

Sincerely,

Dennis Nordstrand

Dennis Nordstrand
Yellow River Supply Company

September 17, 2008

Town of Beaver
Attn: Ms. Wendy Coleman
Town Clerk
82 145th Avenue
Turtle Lake, WI 54889

RE: Notification of Existing Groundwater Contamination in the Right-of-Way Beneath 150th Avenue, Turtle Lake, Polk County, Wisconsin

Dear Ms. Coleman:

I have completed an environmental investigation and remediation at the Former Yellow River Supply Company at 153 150th Avenue, Turtle Lake, WI. In accordance with the conditions for case closure Wis. Admin. Code NR726, Yellow River Supply Company is required to notify the Town of Beaver, among others, that groundwater contamination exists beneath the right-of-way of 150th Avenue in front of the current Cemstone Ready-Mix Plant.

Groundwater contamination that appears to have originated on the property located at 153 150th Avenue has migrated under the 150th Avenue right-of-way. The levels of petroleum contamination in the groundwater on your property are above the State groundwater enforcement standards found in Chapter NR140 and NR726, Wisconsin Administrative Code. However, it is present and the environmental consultants who have investigated this contamination have determined that this groundwater contaminant plume is stable or receding and will naturally degrade over time. I believe that allowing natural attenuation to complete the clean-up at this site will meet the requirements for case closure that are found in Chapter NR726 and Chapter NR746 *(or Comm 46)*, Wisconsin Administrative Code, and I will be requesting that the Department of Natural Resources accept natural attenuation as the final remedy for this site and grant case closure. Closure means that the Department will not be requiring any further investigation or clean-up to be taken, other than the reliance on natural attenuation.

Since the source of groundwater contamination is not on your property, neither you nor any subsequent owner of your property will be held responsible for investigation or cleanup of this groundwater contamination, as long as you and any subsequent owners comply with the requirements of Section 292.13, Wisconsin Statutes, including allowing access to your property for investigation or cleanup if access is required. To obtain a copy of the Department of Natural Resources' publication #RR-589, Fact Sheet 10: Guidance for Dealing with Properties Affected by Off-Site Contamination," you may visit http://www.dnr.state.wi.us/org/aw/rr/archives/pubs/RR589.pdf or call 608-267-3859.

The Department of Natural Resources will not review my final closure request for at least 30 days after the date of this letter. As an affected property owner, you have the right to contact the Department to provide any technical information that you may have that indicates that closure should not be granted at this site. If you would like to submit any information to the Wisconsin Department of Natural Resources that is relevant to the closure request, you should mail that information to: Wisconsin Department of Natural Resources, Phil Richards, 875 South 4th Avenue, Park Falls, WI 54552.

If this case is closed, the property will be listed on the Department of Natural Resources' geographic information system (GIS Registry) of Closed Remediation Sites. The information on the GIS Registry includes maps showing the location of properties in Wisconsin where ground water contamination above Chapter NR140 Enforcement Standards was found at the time that the case was closed. This GIS Registry will be available to the general public on the Department of Natural Resources internet web site. Please review the enclosed legal description of your property, and notify me within the next 30 days if the legal description is incorrect.

Once the Department makes a decision on my closure request, it will be documented in a letter. If the Department grants closure, you may obtain a copy of this letter by requesting a copy from me, by writing to the agency address given above or by accessing the DNR GIS Registry of Closed Remediation Sites on the internet at http://www.dnr.wi.gov/org/aw/rr/gis/index.htm A copy of the closure letter is included as part of the site file on the GIS Registry of Closed Remediation Sites.

Should you or any subsequent property owner wish to construct or reconstruct a well on your property, special well construction standards may be necessary to protect the well from the residual groundwater contamination. Any well driller who proposes to construct the well on your property in the future will first need to obtain approval from a regional water supply specialist in the DNR's Drinking Water and Groundwater program. The well construction application, form 3300-254, is on the internet at http://www.dnr.state.wi.us/org/water/dwg/3300254.pdf or may be accessed through the GIS Registry web address in the preceding paragraph.

If you need more information, you may contact me at ~~530~~ 210 Sommers Landing Road, North Hudson, WI 54016, 715-386-5766, or my environmental consultant (Scott McCurdy) at Cedar Corporation, 604 Wilson Avenue, Menomonie, WI 54751, 715-235-9081, or you may contact Phil Richards, 875 South 4th Avenue, Park Falls, WI 54552, 715-762-1352.

Sincerely,

Dennis Nordstrand

Dennis Nordstrand
Yellow River Supply Company