The following site is being submitted for inclusion into the Groundwater GIS registry:

- For DNR County and Region list go to:
  g:\pf\pecfa\site\gis\BRRTS County and Region Codes.xls
- To begin, click on cell to the right of; *This is a:*
- Use Tab, ↓ or Pg Down to navigate form. Print & include with file when completed.

This is a:	New Submittal
BRRTS ID (no dashes):	**0316000787**
Comm # (no dashes):	54880550718
County:	Douglas
Region:	Northern
Site name:	Pederson Airmotive
Street Address:	4818 Hammond Ave
City:	Superior
Final Closure Date	2002-10-23
Closure Conditions:	met
Off-source property contamination?	No
(If yes, attach locational data and deed information on pg. 2)	
Right-of-way contamination?	No
Contaminated media:	Groundwater

GPS Coordinates (meters in the **WTM91** projection)

Easting (X):	359636
Northing (Y):	692013
Collection Method:	DNR Web Site
Scale or Resolution:	1:3,839
(1:24,000 scale or finer)	
Prepared by:	Brian Taylor
Submitted by:	Cheryl Nelson

Source Property Checklist

- ☒ Final Closure Letter
- ☒ Copy of the most recent deed, which includes legal description for all properties w/ GW > NR 140 ES
- ☐ Where the legal description in the deed(s) refers to a certified survey map or recorded plat map, include those documents
- ☒ Parcel ID for all properties w/ GW > NR 140 ES
- ☒ General Location Map
- ☒ Detailed Location Map showing property boundaries, buildings, MW(s) and/or potable wells etc for properties with GW >NR140 ES
- ☒ Latest Map(s) showing extent or outline of current GW plume (isoconcentrations)
- ☒ Map showing GW flow direction
- ☒ Latest Table of GW results
- ☒ Geologic cross section (if generated as part of the site investigation)
- ☐ Statement signed by RP certifying correctness of legal descriptions
- ☒ Updated Database

ENVIRONMENTAL & REGULATORY SERVICES DIVISION
BUREAU OF PECFA
P.O. Box 8044
Madison, Wisconsin 53708-8044
TDD #: (608) 264-8777
Fax #: (608) 267-1381
http://www.commerce.state.wi.us
http://www.wisconsin.gov
Scott McCallum, Governor
Philip Edw. Albert, Secretary

Wisconsin
Department of Commerce

October 23, 2002

Mr. Gary Blaisdell
City of Superior
1407 Hammond Ave
Superior, WI 54880-1624

RE: **Final Closure**

Commerce # 54880-5507-18 WDNR BRRTS # 03-16-000787
Pederson Airmotive, 4818 Hammond Ave, Superior

Dear Mr. Blaisdell:

The Wisconsin Department of Commerce (Commerce) has received all items required for closure of the site referenced above. This site is now listed as "closed" on the Commerce database.

It is in your best interest to keep all documentation related to the environmental activities at your site. If residual contamination is encountered in the future, appropriate measures must be implemented to assure that it is managed following all applicable regulations. If future site conditions indicate that any remaining contamination poses a threat, and subsequent information indicates a need to reopen this case, any original claim under the PECFA fund would also reopen and you may apply for assistance to the extent of remaining eligibility.

Thank you for your efforts to protect Wisconsin's environment. If you have any questions, please contact me in writing at the letterhead address or by telephone at (608) 266-0593.

Sincerely,

Brian F. Taylor
Hydrogeologist
Site Review Section

cc: Jan Deick, American Engineering Testing, Inc.
Case File

747920 **NOTICE OF CONTAMINATION TO PROPERTY AND COVENANT TO RUN WITH THE LAND**

DOCUMENT # 747920

City Atty 15/ck

Legal Description of the Property:

See Exhibit A, attached, and hereby made a part of this restriction.

Recorded
OCT. 01,2002 AT 01:45PM
KATHY F. HANSON
DOUGLAS COUNTY RECORDER
SUPERIOR, WI 54880-2769
Fee Amount: $15.00

RECEIVED
OCT 14 2002
ERS DIVISION

STATE OF WISCONSIN } ss
COUNTY OF DOUGLAS }

Part of
Tax Parcel No. 08-808-10041-00

WHEREAS, the City of Superior is the owner of the above-described property.

WHEREAS, one or more petroleum discharges have occurred at this property contaminating groundwater above NR 140 enforcement standards and soils above NR 720 residual contaminant levels of the Wisconsin Administrative Code exist(s) on this property.

NOW THEREFORE, the owner hereby declares that all of the property described above is held and shall be held, conveyed or encumbered, leased, rented, used, occupied and improved subject to the following limitation and restrictions:

> Anyone who proposes to construct or reconstruct a well on this property is required to contact the Wisconsin Department of Natural Resources of Drinking Water and groundwater, or its successor agency, to determine what specific prohibitions or requirements are applicable, prior to constructing or reconstructing a well on this property. No well may be constructed or reconstructed on this property unless applicable requirements are met.

Also,

> Residual petroleum contaminated soil and groundwater remains on this site. According to the report filed by American Engineering Testing, Inc., the residual contaminated soil and groundwater is located in the central portion (between the Pederson Airmotive building and a hanger located to the south) of this property with groundwater moving in a north-northwesterly direction. Natural attenuation is the approved remedial alternative for this site. If contaminated soil is excavated in the future, it may be considered a solid waste and will need to be disposed in accordance with all applicable laws. File references: PECFA Claim number 54880-5507-18 and BRRTS 03-16-000787, American Engineering Testing, Inc., report dated June 20, 2001.

This restriction is hereby declared to be a covenant running with the land and shal be fully binding upon all persons acquiring the above-described property whether by descent, devise, purchase or otherwise. This restriction inures to the benefit of and is enforceable by the Wisconsin Department of Commerce, its successors or assigns. The Department, its successors or assigns, may initiate proceedings at law or in equity against any person or persons who violate or are proposing to violate this covenant, to prevent the proposed violation or to recover damages for such violation.

Any person who is or becomes owner of the property described above may request that the Department, or its successor, issue a determination that the restrictions set forth in this covenant are no longer required. That property owner shall provide any and all necessary information to the Department in order for the Department to be able to make a determination. Upon receipt of such a request, the Department shall determine whether or not the restrictions contained herein can be extinguished. Conditions under which a restriction may be extinguished will be determined in accordance with the site specific standards, rules and laws for this property. If the Department determines that the restrictions can be extinguished, an affidavit, with a copy of the Department's written determination, may be recorded to give notice that this restriction, or portions of this restriction are no longer binding. Any restriction places upon this property shall not be extinguished without the Department's written determination.

By signing this document, Sharon Kotter asserts that she is duly authorized to sign this document on behalf of the City of Superior.

Dated 9/30, 2002.

CITY OF SUPERIOR,

By: Sharon Kotter
Sharon Kotter, Mayor

State of Wisconsin } ss
County of Douglas }

On the above date, the foregoing instrument was acknowledged before me by the above-named person.

(Notary Seal)

Notary Public, State of Wisconsin
My Commission Expires: 11/27/05

This instrument was drafted by
Harley Frog Prell

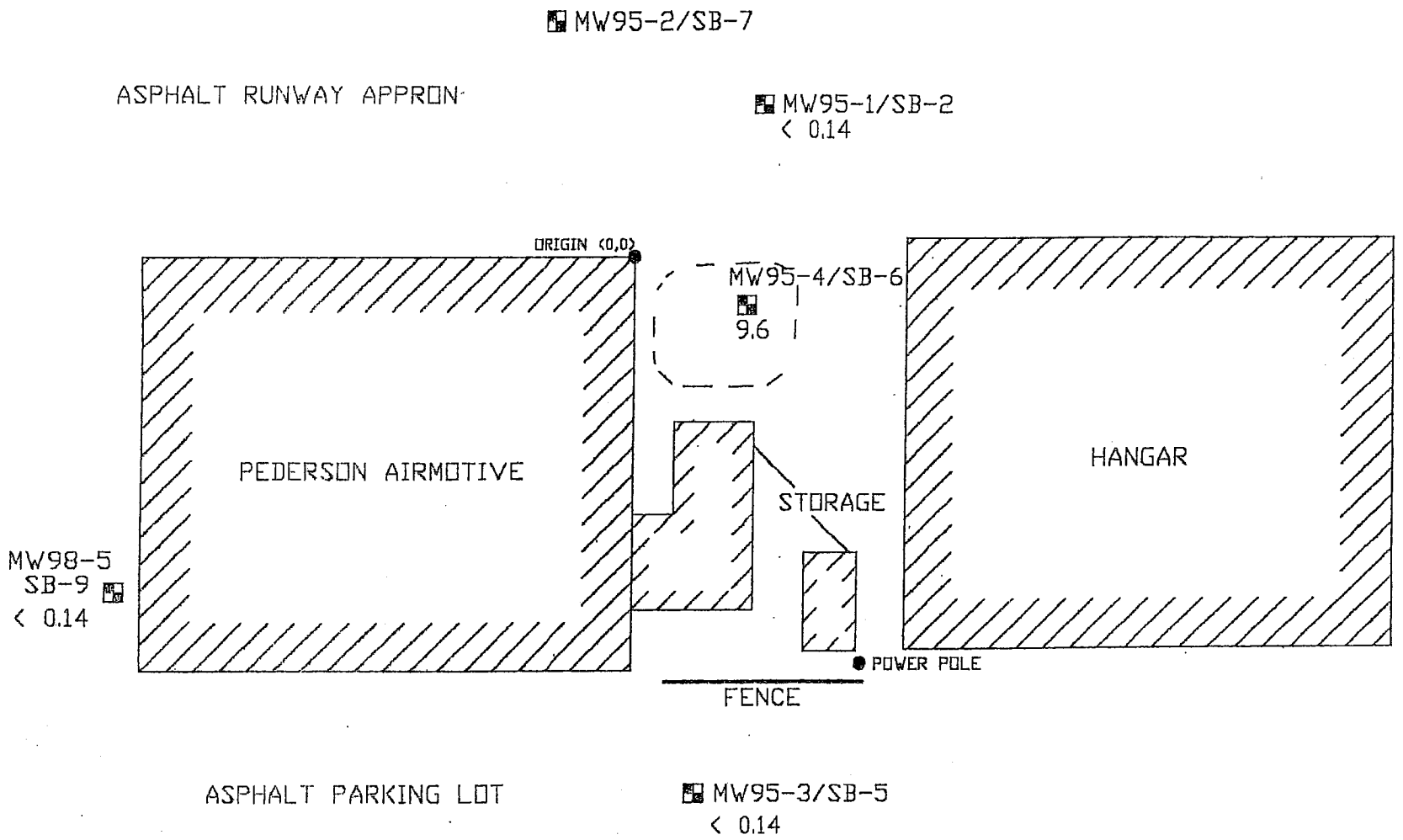

AMERICAN ENGINEERING TESTING, INC.

DULUTH, MINNESOTA

PROJECT: PEDERSON AIRMOTIVE
SUPERIOR, WISCONSIN

SUBJECT: Groundwater Contamination

AET JOB #: 07-00646

FIGURE: 9

DATE: 5/28/01

DRAWN BY: ZAE

CHECKED BY:

LEGEND:

TANK EXCAVATION

MW98-5 SB-9 MONITORING WELL LOCATION AND NUMBER

< 0.14 BENZENE CONCENTRATION MICROGRAMS PER LITER

GRAPHIC SCALE
1"=20'
0 5 10 20 FEET

NOTE: Site plan was adapted from MJ Enviromental Consultants Inc. (November 1997)

747920

739868

Attachment A

Legal Description of land leased to Paul Pederson from the City of Superior. The land is located at the Superior Municipal Airport.

Lesee: Paul Pederson
Lease Start: January 01, 1983
Lease Term: 99 years (to the year 2082)

A parcel of land located in the southwest quarter of Section 35, Township 49 North, Range 14 West, City of Superior, Douglas County Wisconsin described as follows:

Commencing at the West quarter of said Section 35;
Thence South 01degrees 20 minutes 00 seconds East 1201.30 feet along the west line of said Section 35 ;
Thence North 88 degrees 40 minutes 00 seconds East 240.00 feet to the reference line for hanger row (A);
Thence South 01 degrees 20 minutes 00 seconds East 15.00 feet to the point of beginning;
Thence continuing South 01degrees 20 minutes 00 seconds East 80.00 feet;
Thence South 88 degrees 40 minutes 00 seconds West 122.50 feet;
Thence North 01 degrees 20 minutes 00 seconds West 80.00 feet;
Thence North 88 degrees 40 minutes 00 seconds East 122.50 feet to the point of beginning.
Parcel contains 9800 square feet.

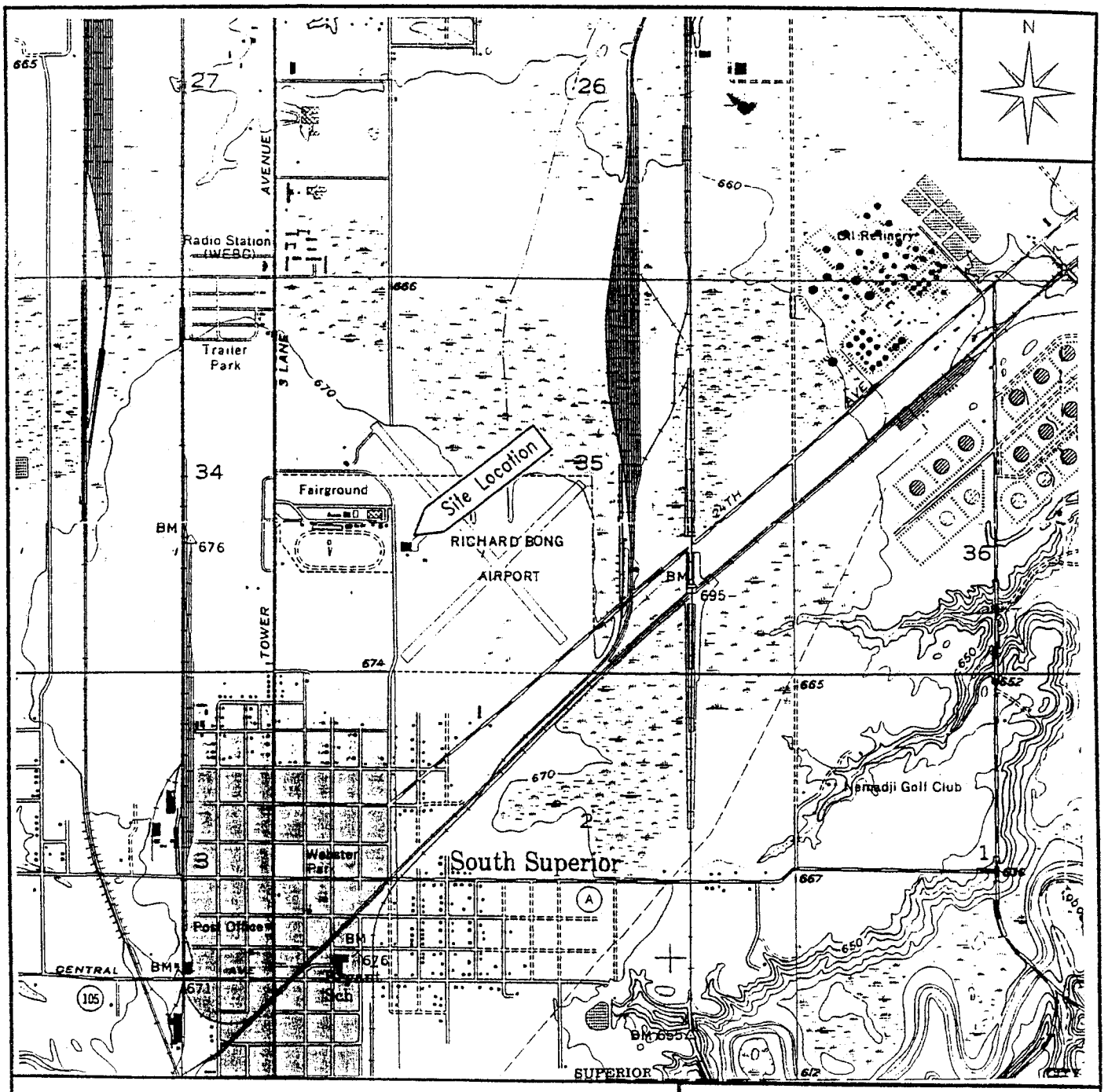

SCALE 1:24000

1/2 0 MILE

1000 0 1000 2000 3000 FEET

CONTOUR INTERVAL 10 FEET

SOURCE: PART OF THE SUPERIOR QUAD.
U.S.G.S. 7.5 MINUTE SERIES

FIGURE 1

PEDERSON AIRMOTIVE
4818 HAMMOND AVENUE
SUPERIOR, WI.

SITE LOCATION MAP

MJ

MJ ENVIRONMENTAL CONSULTANTS INC. 1-800-424-9821
101 W. 2ND STREET, SUITE 205, CARNEGIE BLDG. FAX: (218) 722-5764
DULUTH, MINNESOTA 55802

DATE: 3/1/96 JOB NO. 95.407

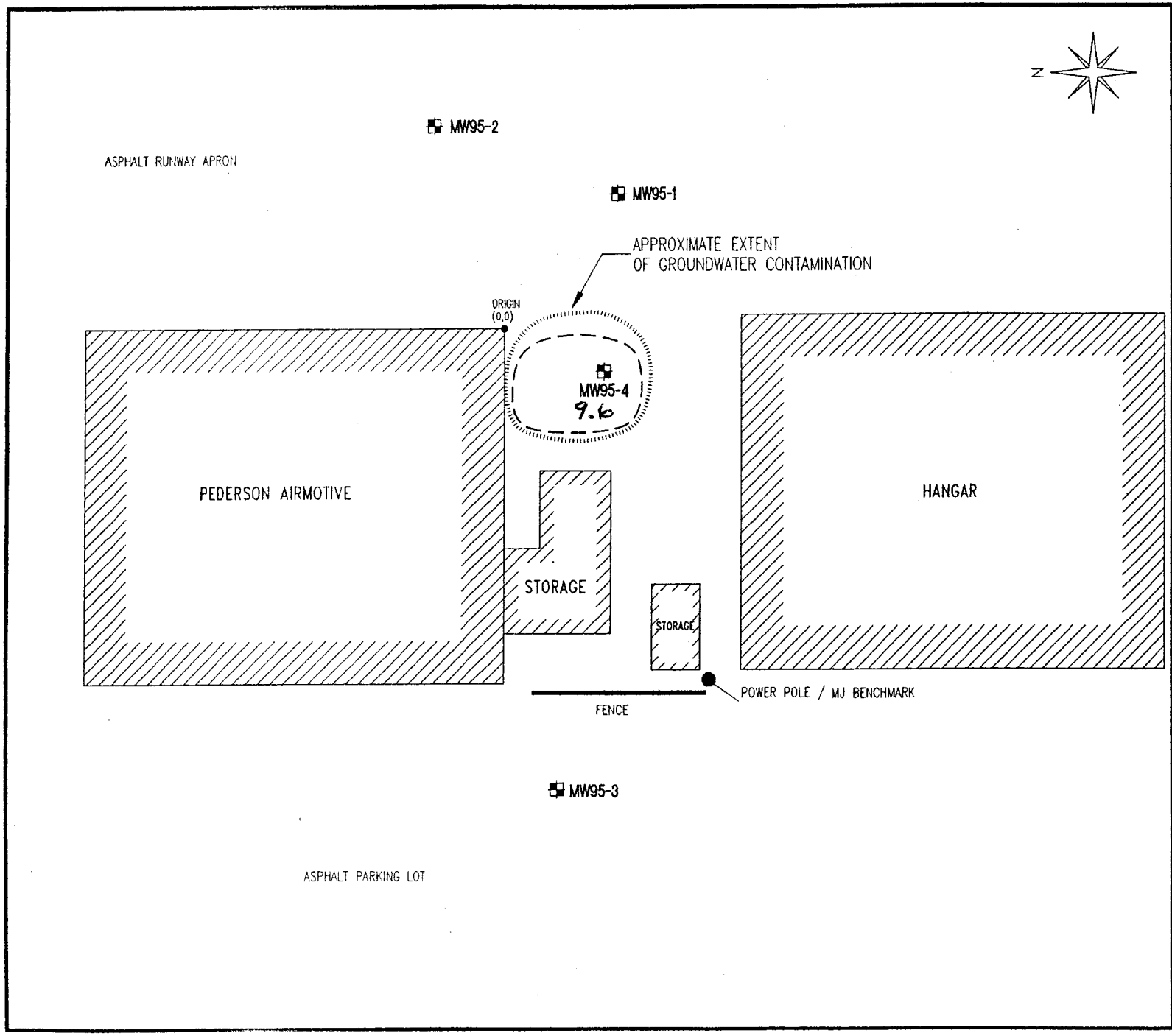

MJ ENVIRONMENTAL CONSULTANTS IN
101 W. 2ND ST., SUITE 205, CARNEGIE BLDG
DULUTH, MN 55802
1-800-424-9821
FAX: (218) 722-5764

LEGEND:

MW95-3 MONITORING WELL LOCATION AND NUMBER

TANK EXCAVATION LIMITS

9.6 Benzene ug/L

GRAPHIC SCALE
0 5 10 20
(IN FEET)

FIGURE ~~8~~ 9

EXTENT OF GROUNDWATER CONTAMINATIO
FROM ~~05/29/97 DATA~~
10/28/98

PEDERSON AIRMOTIVE
SUPERIOR, WISCONSIN

CREATED BY: TEE DRAWN BY: PJE
CHK'D BY: GFD
FILE NAME: C:\PROJECTS\1995\95407\TKEXCAV.DWG
DATE: 10/30/97 JOB NO. 95.40

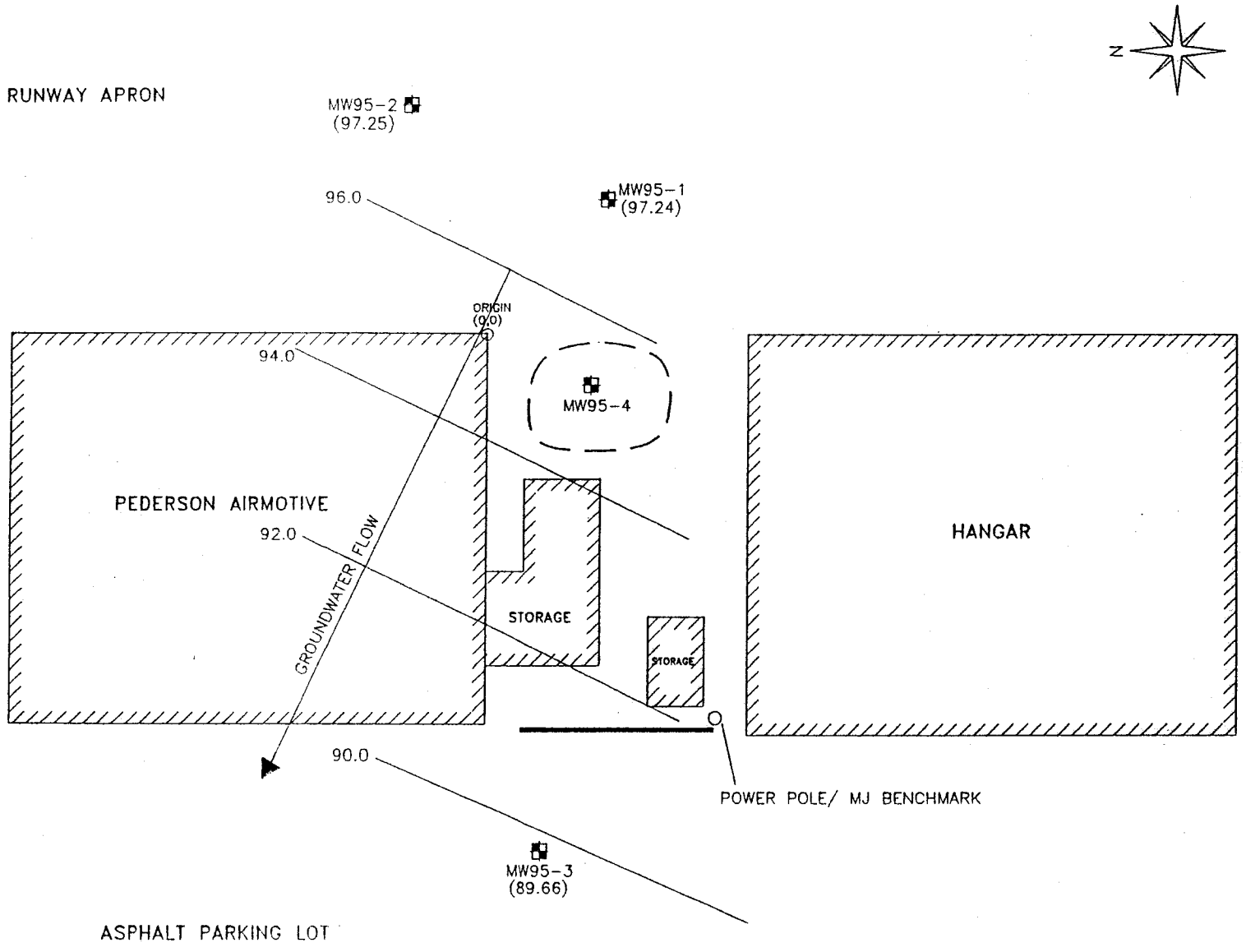

MJ ENVIRONMENTAL CONSULTANTS INC.
101 W. 2ND ST., SUITE 205, CARNEGIE BLDG.
DULUTH, MN 55802
1-800-424-9821
FAX: (218) 722-5764

LEGEND:

TANK EXCAVATION LIMITS

MW95-1 (97.24) — MONITORING WELL LOCATION, NUMBER AND GROUNDWATER ELEVATION (FEET)

94.0 — GROUNDWATER CONTOUR LINE AND ELEVATION

CONTOUR INTERVAL = 2.0 ft.

FENCE

NOTES:

CALCULATION NUMBER 1 DOES NOT INCLUDE THE GROUNDWATER ELEVATION FROM MW95-4

$$\frac{\Delta h}{\Delta l} = .0952$$

0 5 10 20

SCALE

FIGURE 7

GROUNDWATER CONTOUR MAP FOR 11/3/95 (CALC. NO. 1)

PEDERSON AIRMOTIVE
SUPERIOR, WISCONSIN

CREATED BY: BEB	DRAWN BY: PJB
CHK'D BY: IGM	
FILE NAME: C:\PROJECTS\1995\95407\GWF111.DWG	
DATE: 3/6/96	JOB NO. 95.407

TABLE 2/6
PEDERSON AIRMOTIVE
SUMMARY OF GROUNDWATER ANALYTICAL RESULTS

Parameter	Monitoring Well Number							Limit of Detection*	Groundwater Quality Standard**	
	MW95-1	MW95-2	MW95-3	MW95-4	MW98-5	T.B.	F.B.		ES	PAL
Lead (ug/L)										
EPA Method 7421										
Tuesday, August 01, 1995	**[6]**	NA	NA	**[5]**	NA	NA	NA	2	15	1.5
Wednesday, August 09, 1995	NA	ND	ND	NA	NA	NA	NA	2	15	1.5
Friday, November 03, 1995	ND	ND	ND	ND	NA	NA	NA	2	15	1.5
Thursday, May 29, 1997	ND	ND	**[6.3]**	ND	NA	NA	NA	2	15	1.5
Wednesday, October 21, 1998	2.5	NA	6.6	3	14	NA	NA			
Cadmium (ug/L)										
EPA Method 7131										
Tuesday, August 01, 1995	**[15]**	NA	NA	**[12]**	NA	NA	NA	5	5	0.5
Wednesday, August 09, 1995	NA	ND	ND	NA	NA	NA	NA	0.3	5	0.5
Friday, November 03, 1995	ND	0.4	ND	ND	NA	NA	NA	0.3	5	0.5
Thursday, May 29, 1997	ND	ND	ND	ND	NA	NA	NA	0.3	5	0.5
Wednesday, October 21, 1998	NA	NA	NA	NA	NA	NA	NA			
Diesel Range Organics (ug/ L)										
WI-MOD-DRO Method										
Monday, July 31, 1995	110	NA	NA	220	NA	NA	NA	100	UD	UD
Wednesday, August 09, 1995	NA	210	160	NA	NA	NA	NA	100	UD	UD
Friday, November 03, 1995	ND	ND (C)	ND	290	NA	NA	NA	100	UD	UD
Thursday, May 29, 1997	130	140	220	1300	NA	NA	NA	100	UD	UD
Wednesday, October 21, 1998	ND	NA	390	950	790	NA	NA			
Volatile Organic Coumpounds (ug/L)										
Modified EPA Method 8021										
Benzene										
Monday, July 31, 1995	ND	NA	NA	**[19]**	NA	NA	NA	0.2	5	0.5
Wednesday, August 09, 1995	NA	ND	ND	NA	NA	NA	ND	0.2	5	0.5
Friday, November 03, 1995	ND	ND	**[1.0]**	**[12]**	NA	NA	ND	0.2	5	0.5
Thursday, May 29, 1997	ND	ND	ND	**[9.1]**	NA	ND	ND	0.2	5	0.5
Wednesday, October 21, 1998	ND	NA	ND	**[9.6]**	ND	ND	ND			
Toluene										
Monday, July 31, 1995	ND	NA	NA	33	NA	NA	NA	0.5	343	68.6
Wednesday, August 09, 1995	NA	ND	ND	NA	NA	NA	ND	0.5	343	68.6
Friday, November 03, 1995	ND	ND	ND	3.4 (A)	NA	NA	1.1 (A)	0.5	343	68.6
Thursday, May 29, 1997	ND	ND	ND	1.3	NA	ND	0.55(Q)	0.5	343	68.6
Wednesday, October 21, 1998	ND	NA	ND	0.63	ND	ND	ND			

Notes:

Table presents only those compounds for which there were detections.
Results in brackets and bold equal or exceed the Groundwater Quality Standard
* = Limit of Detection value is the typical value for most soil samples. Actual value may vary per analysis.
** = Groundwater Quality Standard was obtained from the Wisconsin Administrative Code NR 140.10, August 1995, October 1996
ES = Enforcement Standard
Q = Results are qualified due to uncertainty of parameter concentration between the limit of detection (LOD) and limit of quantification (LOQ)
PAL = Preventative Action LImit
ND = Not Detected
ug/L = micrograms per liter = parts per billion (ppb)
UD = Undefined

A = This parameter observed in laboratory blank at a concentration of 0.9 ug/L
B = This parameter observed in laboratory blank at a concentration of 0.7 ug/L
C = Increased detection limits due to the limited sample volume
NA = Not Analyzed for this parameter

6

TABLE 1 (Continued)
PEDERSON AIRMOTIVE
SUMMARY OF GROUNDWATER ANALYTICAL RESULTS

Parameter	Monitoring Well Number							Limit of Detection*	Groundwater Quality Standard**	
	MW95-1	MW95-2	MW95-3	MW95-4	MW98-5	T.B.	F.B.		ES	PAL
Volatile Organic Coumpounds (ug/L)										
Modified EPA Method 8021										
Ethylbenzene										
Monday, July 31, 1995	ND	NA	NA	16	NA	NA	NA	0.2	700	140
Wednesday, August 09, 1995	NA	ND	0.8 (C)	NA	NA	NA	0.9 (C)	0.2	700	140
Friday, November 03, 1995	ND	ND	ND	3.6	NA	NA	ND	0.5	700	140
Thursday, May 29, 1997	ND	ND	ND	2.6	NA	ND	ND	0.5	700	140
Wednesday, October 21, 1998	ND	NA	ND	2.5	ND	ND	ND			
Total Xylenes										
Monday, July 31, 1995	ND	NA	NA	63	NA	NA	NA	0.5	620	124
Wednesday, August 09, 1995	NA	ND	ND	NA	NA	NA	ND	0.5	620	124
Friday, November 03, 1995	0.7 (B)	ND	1.3 (B)	15 (B)	NA	NA	0.7 (B)	0.5	620	124
Thursday, May 29, 1997	ND	ND	ND	5.3	NA	ND	ND	0.5	620	124
Wednesday, October 21, 1998	ND	NA	ND	3.8	ND	ND	ND			
n-Butylbenzene										
Monday, July 31, 1995	ND	NA	NA	9.8	NA	NA	NA	0.4	UD	UD
Wednesday, August 09, 1995	NA	ND	ND	NA	NA	NA	ND	0.4	UD	UD
Friday, November 03, 1995	ND	ND	ND	1.7	NA	NA	ND	0.4	UD	UD
Thursday, May 29, 1997	NA	NA	NA	NA	NA	NA	NA	0.4	UD	UD
Wednesday, October 21, 1998	NA	NA	NA	NA	NA	NA	NA			
sec-Butylbenzene										
Monday, July 31, 1995	ND	NA	NA	2.1	NA	NA	NA	0.4	UD	UD
Wednesday, August 09, 1995	NA	ND	ND	NA	NA	NA	ND	0.4	UD	UD
Friday, November 03, 1995	ND	ND	ND	0.5	NA	NA	ND	0.4	UD	UD
Thursday, May 29, 1997	NA	NA	NA	NA	NA	NA	NA	0.4	UD	UD
Wednesday, October 21, 1998	NA	NA	NA	NA	NA	NA	NA			
Chloroethane										
Monday, July 31, 1995	7.5	NA	NA	ND	NA	NA	NA	0.6	400	80
Wednesday, August 09, 1995	NA	ND	ND	NA	NA	NA	ND	0.6	400	80
Friday, November 03, 1995	ND	ND	ND	ND	NA	NA	ND	0.6	400	80
Thursday, May 29, 1997	NA	NA	NA	NA	NA	NA	NA	0.4	UD	UD
Wednesday, October 21, 1998	NA	NA	NA	NA	NA	NA	NA			
Dichlorodifluoromethane										
Monday, July 31, 1995	2	NA	NA	5.6	NA	NA	NA	2	1000	200
Wednesday, August 09, 1995	NA	ND	ND	NA	NA	NA	ND	2	1000	200
Friday, November 03, 1995	ND	ND	ND	ND	NA	NA	ND	2	1000	200
Thursday, May 29, 1997	NA	NA	NA	NA	NA	NA	NA	0.4	UD	UD
Wednesday, October 21, 1998	NA	NA	NA	NA	NA	NA	NA			

Notes:

Table presents only those compounds for which there were detections.
Results in brackets and bold equal or exceed the Groundwater Quality Standard
* = Limit of Detection value is the typical value for most soil samples. Actual value may vary per analysis.
** = Groundwater Quality Standard was obtained from the Wisconsin Administrative Code NR 140.10, August 1995, October 1996
Q = Results are qualified due to uncertainty of parameter concentration between the limit of detection (LOD) and limit of quantification (LOQ)
ES = Enforcement Standard
PAL = Preventative Action Limit
ND = Not Detected
ug/L = micrograms per liter = parts per billion (ppb)
UD = Undefined

A = This parameter observed in laboratory blank at a concentration of 0.9 ug/L
B = This parameter observed in laboratory blank at a concentration of 0.7 ug/L
C = Increased detection limits due to the limited sample volume
NA = Not Analyzed for this parameter

95.407/gwantbl.wb2

6

TABLE 7 (Continued)
PEDERSON AIRMOTIVE
SUMMARY OF GROUNDWATER ANALYTICAL RESULTS

Parameter	Monitoring Well Number							Limit of Detection*	Groundwater Quality Standard**	
	MW95-1	MW95-2	MW95-3	MW95-4	MW98-5	T.B.	F.B.		ES	PAL
Volatile Organic Coumpounds (ug/L) Modified EPA Method 8021										
Isopropylbenzene										
Monday, July 31, 1995	ND	NA	NA	1.8	NA	NA	NA	0.2	UD	UD
Wednesday, August 09, 1995	NA	ND	ND	NA	NA	NA	ND	0.2	UD	UD
Friday, November 03, 1995	ND	ND	ND	0.6	NA	NA	ND	0.2	UD	UD
Thursday, May 29, 1997	NA	NA	NA	NA	NA	NA	NA	0.4	UD	UD
Wednesday, October 21, 1998	NA	NA	NA	NA	NA	NA	NA			
4-Isopropyltoluene										
Monday, July 31, 1995	ND	NA	NA	0.5	NA	NA	NA	0.4	UD	UD
Wednesday, August 09, 1995	NA	ND	ND	NA	NA	NA	ND	0.4	UD	UD
Friday, November 03, 1995	ND	ND	ND	ND	NA	NA	ND	0.4	UD	UD
Thursday, May 29, 1997	NA	NA	NA	NA	NA	NA	NA	0.4	UD	UD
Wednesday, October 21, 1998	NA	NA	NA	NA	NA	NA	NA			
Naphthalene										
Monday, July 31, 1995	ND	NA	NA	7.9	NA	NA	NA	0.2	40	8
Wednesday, August 09, 1995	NA	ND	ND	NA	NA	NA	0.3	0.2	40	8
Friday, November 03, 1995	ND	ND	ND	ND	NA	NA	ND	0.5	40	8
Thursday, May 29, 1997	NA	NA	NA	NA	NA	NA	NA	0.4	UD	UD
Wednesday, October 21, 1998	NA	NA	NA	NA	NA	NA	NA			
n-Propylbenzene										
Monday, July 31, 1995	ND	NA	NA	4.1	NA	NA	NA	0.2	UD	UD
Wednesday, August 09, 1995	NA	6.7	0.3	NA	NA	NA	ND	0.2	UD	UD
Friday, November 03, 1995	ND	ND	ND	0.7	NA	NA	ND	0.2	UD	UD
Thursday, May 29, 1997	NA	NA	NA	NA	NA	NA	NA	0.4	UD	UD
Wednesday, October 21, 1998	NA	NA	NA	NA	NA	NA	NA			
Trichlorofluoromethane										
Monday, July 31, 1995	5	NA	NA	ND	NA	NA	NA	1	UD	UD
Wednesday, August 09, 1995	NA	ND	ND	NA	NA	NA	ND	1	UD	UD
Friday, November 03, 1995	ND	ND	ND	ND	NA	NA	ND	1	UD	UD
Thursday, May 29, 1997	NA	NA	NA	NA	NA	NA	NA	0.4	UD	UD
Wednesday, October 21, 1998	NA	NA	NA	NA	NA	NA	NA			

Notes:
Table presents only those compounds for which there were detections.
Results in brackets and bold equal or exceed the Groundwater Quality Standard
* = Limit of Detection value is the typical value for most soil samples. Actual value may vary per analysis.
** = Groundwater Quality Standard was obtained from the Wisconsin Administrative Code NR 140.10, August 1995, October 1996
Q = Results are qualified due to uncertainty of parameter concentration between the limit of detection (LOD) and limit of quantification (LOQ)
ES = Enforcement Standard
PAL = Preventative Action LImit
ND = Not Detected
ug/L = micrograms per liter = parts per billion (ppb)
UD = Undefined
A = This parameter observed in laboratory blank at a concentration of 0.9 ug/L
B = This parameter observed in laboratory blank at a concentration of 0.7 ug/L
C = Increased detection limits due to the limited sample volume
NA = Not Analyzed for this parameter

6

TABLE 2 (Continued)
PEDERSON AIRMOTIVE
SUMMARY OF GROUNDWATER ANALYTICAL RESULTS

ameter	Monitoring Well Number							Limit of Detection*	Groundwater Quality Standard**	
	MW95-1	MW95-2	MW95-3	MW95-4	MW98-5	T.B.	F.B.		ES	PAL
atile Organic Coumpounds (ug/L)										
ified EPA Method 8021										
1,2,4 - Trimethylbenzene										
Monday, July 31, 1995	ND	NA	NA	26	NA	NA	NA	0.4	UD	UD
Wednesday, August 09, 1995	NA	ND	ND	NA	NA	NA	0.6	0.4	UD	UD
Friday, November 03, 1995	ND	ND	1.1	4.6	NA	NA	0.7	0.4	UD	UD
Thursday, May 29, 1997	ND	ND	ND	2.4 (Q)	NA	ND	ND	0.4	UD	UD
Wednesday, October 21, 1998	ND	NA	ND	1.7	ND	ND	ND			
1,3,5 - Trimethylbenzene										
Monday, July 31, 1995	ND	NA	NA	10	NA	NA	NA	0.2	UD	UD
Wednesday, August 09, 1995	NA	ND	ND	NA	NA	NA	ND	0.2	UD	UD
Friday, November 03, 1995	ND	ND	ND	2.5	NA	NA	ND	0.2	UD	UD
Thursday, May 29, 1997	ND	ND	ND	0.48 (Q)	NA	ND	ND	0.2	UD	UD
Wednesday, October 21, 1998	ND	NA	ND	ND	ND	ND	ND			
ynuclear Aromatic Hydrocarbons										
/L) EPA Method 8270										
Anthracene										
Monday, July 31, 1995	ND	NA	NA	5.9	NA	NA	NA	0.1	UD	UD
Wednesday, August 09, 1995	NA	ND	ND	NA	NA	NA	NA	0.1	UD	UD
Sunday, November 03, 1996	ND	ND	ND	0.19	NA	NA	ND	0.1	UD	UD
Thursday, May 29, 1997	ND	ND	ND	ND	NA	NA	NA	0.1	UD	UD
Wednesday, October 21, 1998	NA	NA	NA	NA	NA	NA	NA			
Benzo(a)anthracene										
Monday, July 31, 1995	ND	NA	NA	1.5	NA	NA	NA	0.002	UD	UD
Wednesday, August 09, 1995	NA	ND	0.003	NA	NA	NA	NA	0.002	UD	UD
Sunday, November 03, 1996	0.014	ND	0.005	0.093	NA	NA	ND	0.002	UD	UD
Thursday, May 29, 1997	ND	ND	ND	ND	NA	NA	NA	0.002	UD	UD
Wednesday, October 21, 1998	NA	NA	NA	NA	NA	NA	NA			
Benzo(a)pyrene										
Monday, July 31, 1995	ND	NA	NA	**[2.8]**	NA	NA	NA	0.002	0.2	0.02
Wednesday, August 09, 1995	NA	ND	**[0.008]**	NA	NA	NA	NA	0.002	0.2	0.02
Friday, November 03, 1995	**[0.017]**	ND	**[0.007]**	**[0.077]**	NA	NA	ND	0.002	0.2	0.02
Thursday, May 29, 1997	ND	ND	ND	ND	NA	NA	NA	0.002	0.2	0.02
Wednesday, October 21, 1998	NA	NA	NA	NA	NA	NA	NA			
Benzo(a)fluoranthene										
Monday, July 31, 1995	ND	NA	NA	2.3	NA	NA	NA	0.004	UD	UD
Wednesday, August 09, 1995	NA	ND	0.026	NA	NA	NA	NA	0.004	UD	UD
Friday, November 03, 1995	0.41	ND	0.01	0.16	NA	NA	ND	0.004	UD	UD
Thursday, May 29, 1997	ND	ND	ND	ND	NA	NA	NA	0.004	UD	UD
Wednesday, October 21, 1998	NA	NA	NA	NA	NA	NA	NA			

es:
Table presents only those compounds for which there were detections.
Results in brackets and bold equal or exceed the Groundwater Quality Standard
* = Limit of Detection value is the typical value for most soil samples. Actual value may vary per analysis.
** = Groundwater Quality Standard was obtained from the Wisconsin Administrative Code NR 140.10, August 1995, October 1996
Q = Results are qualified due to uncertainty of parameter concentration between the limit of detection (LOD) and limit of quantification (LOQ)
ES = Enforcement Standard
PAL = Preventative Action LImit
ND = Not Detected
ug/L = micrograms per liter = parts per billion (ppb)
UD = Undefined

A = This parameter observed in laboratory blank at a concentration of 0.9 ug/L
B = This parameter observed in laboratory blank at a concentration of 0.7 ug/L
C = Increased detection limits due to the limited sample volume
NA = Not Analyzed for this parameter

95.407/gwantbl.wb2

6

TABLE 7 (Continued)
PEDERSON AIRMOTIVE
SUMMARY OF GROUNDWATER ANALYTICAL RESULTS

Parameter	Monitoring Well Number							Limit of Detection*	Groundwater Quality Standard**	
	MW95-1	MW95-2	MW95-3	MW95-4	MW98-5	T.B.	F.B.		ES	PAL
Polynuclear Aromatic Hydrocarbons (ug/L) EPA Method 8270										
Benzo(a)fluoranthene										
Monday, July 31, 1995	ND	NA	NA	2.3	NA	NA	NA	0.004	UD	UD
Wednesday, August 09, 1995	NA	ND	0.026	NA	NA	NA	NA	0.004	UD	UD
Friday, November 03, 1995	0.41	ND	0.01	0.16	NA	NA	ND	0.004	UD	UD
Thursday, May 29, 1997	NA	NA	NA	NA	NA	NA	NA	0.004	UD	UD
Wednesday, October 21, 1998	NA	NA	NA	NA	NA	NA	NA			
Benzo(k)fluoranthene										
Monday, July 31, 1995	ND	NA	NA	1.3	NA	NA	NA	0.004	UD	UD
Wednesday, August 09, 1995	NA	ND	0.006	NA	NA	NA	NA	0.004	UD	UD
Friday, November 03, 1995	0.014	ND	0.005	0.06	NA	NA	ND	0.004	UD	UD
Thursday, May 29, 1997	ND	ND	ND	ND	NA	NA	NA	0.004	UD	UD
Wednesday, October 21, 1998	NA	NA	NA	NA	NA	NA	NA			
Benzo(ghi)perylene										
Monday, July 31, 1995	ND	NA	NA	ND	NA	NA	NA	0.006	UD	UD
Wednesday, August 09, 1995	NA	ND	0.015	NA	NA	NA	NA	0.006	UD	UD
Friday, November 03, 1995	0.013	ND	ND	ND	NA	NA	ND	0.006	UD	UD
Thursday, May 29, 1997	ND	ND	ND	ND	NA	NA	NA	0.006	UD	UD
Wednesday, October 21, 1998	NA	NA	NA	NA	NA	NA	NA			
Chrysene										
Monday, July 31, 1995	ND	NA	NA	ND	NA	NA	NA	0.023	UD	UD
Wednesday, August 09, 1995	NA	ND	ND	NA	NA	NA	NA	0.023	UD	UD
Friday, November 03, 1995	0.024	ND	ND	ND	NA	NA	ND	0.023	UD	UD
Thursday, May 29, 1997	ND	ND	ND	ND	NA	NA	NA	0.023	UD	UD
Wednesday, October 21, 1998	NA	NA	NA	NA	NA	NA	NA			
Dibenzo(ah)anthracene										
Monday, July 31, 1995	ND	NA	NA	ND	NA	NA	NA	0.005	UD	UD
Wednesday, August 09, 1995	NA	0.013	ND	NA	NA	NA	NA	0.005	UD	UD
Friday, November 03, 1995	ND	ND	ND	ND	NA	NA	ND	0.005	UD	UD
Thursday, May 29, 1997	ND	ND	ND	ND	NA	NA	NA	0.005	UD	UD
Wednesday, October 21, 1998	NA	NA	NA	NA	NA	NA	NA			
Fluoranthene										
Monday, July 31, 1995	ND	NA	NA	5.4	NA	NA	NA	0.006	UD	UD
Wednesday, August 09, 1995	NA	ND	0.033	NA	NA	NA	NA	0.006	UD	UD
Friday, November 03, 1995	0.053	0.013	0.014	0.48	NA	NA	ND	0.006	UD	UD
Thursday, May 29, 1997	ND	ND	ND	0.046	NA	NA	NA	0.006	UD	UD
Wednesday, October 21, 1998	NA	NA	NA	NA	NA	NA	NA			

Notes:

Table presents only those compounds for which there were detections.
Results in brackets and bold equal or exceed the Groundwater Quality Standard
* = Limit of Detection value is the typical value for most soil samples. Actual value may vary per analysis.
** = Groundwater Quality Standard was obtained from the Wisconsin Administrative Code NR 140.10, August 1995, October 1996
Q = Results are qualified due to uncertainty of parameter concentration between the limit of detection (LOD) and limit of quantification (LOQ)
ES = Enforcement Standard
PAL = Preventative Action Limit
ND = Not Detected
ug/L = micrograms per liter = parts per billion (ppb)
UD = Undefined

A = This parameter observed in laboratory blank at a concentration of 0.9 ug/L
B = This parameter observed in laboratory blank at a concentration of 0.7 ug/L
C = Increased detection limits due to the limited sample volume
NA = Not Analyzed for this parameter

TABLE 6 (Continued)
PEDERSON AIRMOTIVE
SUMMARY OF GROUNDWATER ANALYTICAL RESULTS

Parameter	Monitoring Well Number							Limit of Detection*	Groundwater Quality Standard**	
	MW95-1	MW95-2	MW95-3	MW95-4	MW98-5	T.B.	F.B.		ES	PAL
Polynuclear Aromatic Hydrocarbons (ug/L) EPA Method 8270										
Indeno(1,2,3-cd)pyrene										
Monday, July 31, 1995	ND	NA	NA	ND	NA	NA	NA	0.007	UD	UD
Wednesday, August 09, 1995	NA	ND	0.074	NA	NA	NA	NA	0.007	UD	UD
Friday, November 03, 1995	ND	ND	ND	0.1	NA	NA	ND	0.007	UD	UD
Thursday, May 29, 1997	ND	ND	0.035Q	ND	NA	NA	NA	0.007	UD	UD
Wednesday, October 21, 1998	NA	NA	NA	NA	NA	NA	NA			
Phenanthrene										
Monday, July 31, 1995	ND	NA	NA	27	NA	NA	NA	0.1	UD	UD
Wednesday, August 09, 1995	NA	ND	ND	NA	NA	NA	NA	0.1	UD	UD
Friday, November 03, 1995	ND	ND	ND	1.1	NA	NA	ND	0.1	UD	UD
Thursday, May 29, 1997	ND	ND	ND	0.51	NA	NA	NA	0.1	UD	UD
Wednesday, October 21, 1998	NA	NA	NA	NA	NA	NA	NA			
Pyrene										
Monday, July 31, 1995	ND	NA	NA	25	NA	NA	NA	0.022	UD	UD
Wednesday, August 09, 1995	NA	ND	ND	NA	NA	NA	NA	0.022	UD	UD
Friday, November 03, 1995	0.058	ND	ND	0.24	NA	NA	ND	0.022	UD	UD
Thursday, May 29, 1997	ND	ND	ND	0.05Q	NA	NA	NA	0.022	UD	UD
Wednesday, October 21, 1998	NA	NA	NA	NA	NA	NA	NA			

Notes:

Table presents only those compounds for which there were detections.
Results in brackets and bold equal or exceed the Groundwater Quality Standard
* = Limit of Detection value is the typical value for most soil samples. Actual value may vary per analysis.
** = Groundwater Quality Standard was obtained from the Wisconsin Administrative Code NR 140.10, August 1995, October 1996
Q = Results are qualified due to uncertainty of parameter concentration between the limit of detection (LOD) and limit of quantification (LOQ)
ES = Enforcement Standard
PAL = Preventative Action LImit
ND = Not Detected
ug/L = micrograms per liter = parts per billion (ppb)
UD = Undefined

A = This parameter observed in laboratory blank at a concentration of 0.9 ug/L
B = This parameter observed in laboratory blank at a concentration of 0.7 ug/L
C = Increased detection limits due to the limited sample volume
NA = Not Analyzed for this parameter

TABLE ~~8~~ 7
GROUND WATER ANALYTICAL RESULTS
PEDERSON AIRMOTIVE
SUPERIOR, WISCONSIN
AET Job # 07-00646

Parameter / Units / Methods	Date Sampled	Monitoring Well Number						Quality Assurance		Ground Water Quality Standards[1]	
		MW95-1	MW95-1 duplicate	MW95-2	MW95-3	MW95-4	MW98-5	Trip Blank	Field Blank	ES[1]	PAL[1]
Lead (ug/L) EPA Method 7421	10/22/98[2]	Q [2.5]	NA	NA	[6.6]	Q [3.0]	[14]	NA	NA	15	1.5
Cadmium (ug/L) EPA Method 7131	10/22/98[2]	< 0.20	NA	NA	< 0.20	< 0.20	< 0.20	NA	NA	5	0.5
Diesel Range Organics (ug/L) WI MOD DRO	10/22/98[2]	< 100	NA	NA	390	950	790	NA	NA	UD[1]	UD[1]
PVOCs (ug/L) MOD 8021B											
Benzene	10/22/98[2]	< 0.14	< 0.14	NA	< 0.14	9.6	< 0.14	< 0.14	< 0.14	5	0.5
Ethylbenzene	10/22/98[2]	< 0.59	< 0.59	NA	< 0.59	2.5	< 0.59	< 0.59	< 0.59	700	140
Methyl-tert-butyl-ether	10/22/98[2]	< 0.65	< 0.65	NA	< 0.65	< 0.65	< 0.65	< 0.65	< 0.65	60	12
Toluene	10/22/98[2]	< 0.58	< 0.58	NA	< 0.58	Q 0.63	< 0.58	< 0.58	< 0.58	343	68.6
1,3,5- Trimethylbenzene	10/22/98[2]	< 0.59	< 0.59	NA	< 0.59	< 0.59	< 0.59	< 0.59	< 0.59	480[3]	96[3]
1,2,4-Trimethylbenzene	10/22/98[2]	< 0.62	< 0.62	NA	< 0.62	Q 1.7	< 0.62	< 0.62	< 0.62	480[3]	96[3]
Xylenes, -m,-p	10/22/98[2]	< 1.2	< 1.2	NA	< 1.2	Q 1.6	< 1.2	< 1.2	< 1.2	620[4]	124[4]
Xylene, -o	10/22/98[2]	< 0.65	< 0.65	NA	< 0.65	2.2	< 0.65	< 0.65	< 0.65	620[4]	124[4]

Notes:

[9.6] Concentrations in brackets exceed the PAL. Concentrations shaded exceed the ES.

[1] = Ground Water Quality Standard refers to the Enforcement Standard (ES) and Protective Action Limit (PAL) presented in the Wisconsin Administrative Code NR 140.10, Register December, 1998. Standards undetermined (UD) for some parameters.

[2] = Ground water samples collected by MJ Environmental Consultants, Inc. on October 22, 1998. Chemistry analyzed by En Chem Inc.

[3] = ES and PAL for trimethylbenzenes (1,2,4- and 1,3,5-) combined.

[4] = ES and PAL for xylenes (-meta (-m), -para (-p), and -ortho (-o)) combined.

ug/L = Micrograms per liter which is equivalent to parts per billion (ppb).

Q = Result is qualified due to the uncertainty of the parameter concentration detected between the limit of detection (LOD) and limit of quantification (LOQ).

NA = Sample was not analyzed for the associated parameter.

< = Parameter concentration is less than the limit of detection (LOD).

PVOCs = Petroleum Volatile Organic Compounds.

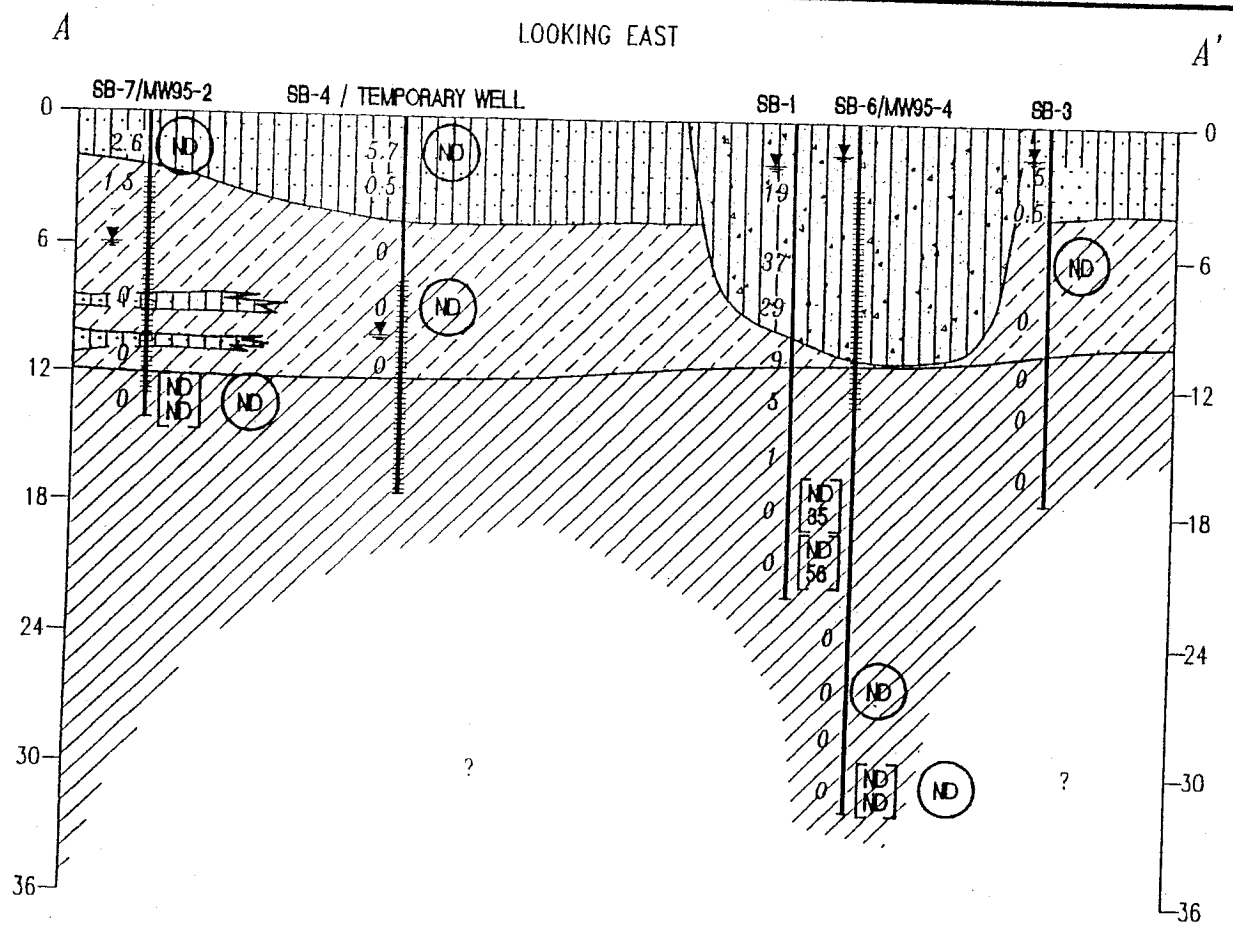

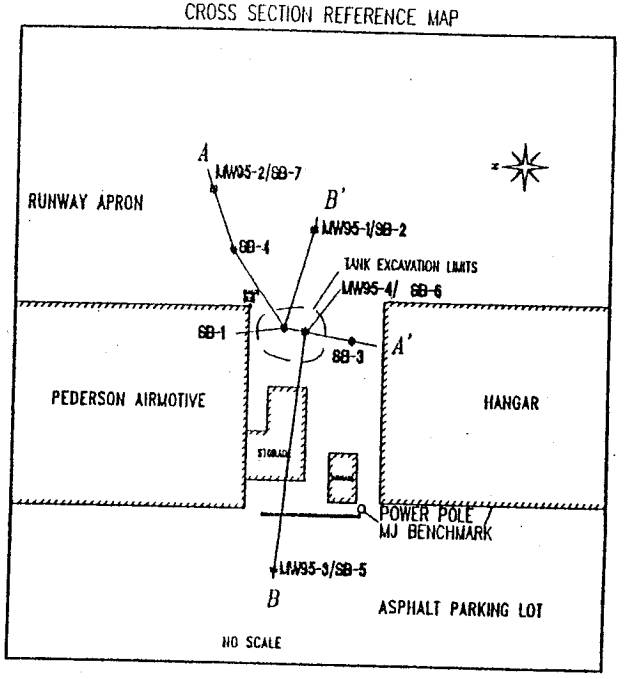

0 6 12 ft.

Scale
Vertical Exaggeration = 1.3X

LEGEND

- Screened Interval
- Water Level Measurement
- Poorly-Graded Silty Sand
- Silty and Clayey Gravel
- Inorganic Clay
- Organic Silts and Clay

[ND / 56] = Soil Laboratory Results
[DRO / BENZENE] Concentrations in [mg/kg / ug/kg]

(ND) = Field GC Results
(BENZENE) Concentrations in [ug/kg]

ND = Not Detected

19 = PID Readings (Reported As ppm In Isobutylene Equivalents)

FIGURE 3

CROSS-SECTION
A to A'

PEDERSON AIRMOTIVE
SUPERIOR, WISCONSIN

CREATED BY: IGM DRAWN BY: PJB
CHK'D BY: JFD
FILE NAME: C:\PROJECTS\1995\95407\XSECA.DWG
DATE: 3/6/96 JOB NO. 95-407

MJ ENVIRONMENTAL CONSULTANTS INC.
101 W. 2ND STREET, SUITE 205, CARNEGIE BLDG.
DULUTH, MINNESOTA

1-800-424-9821 • (218) 722-5880
FAX: (218) 722-5764

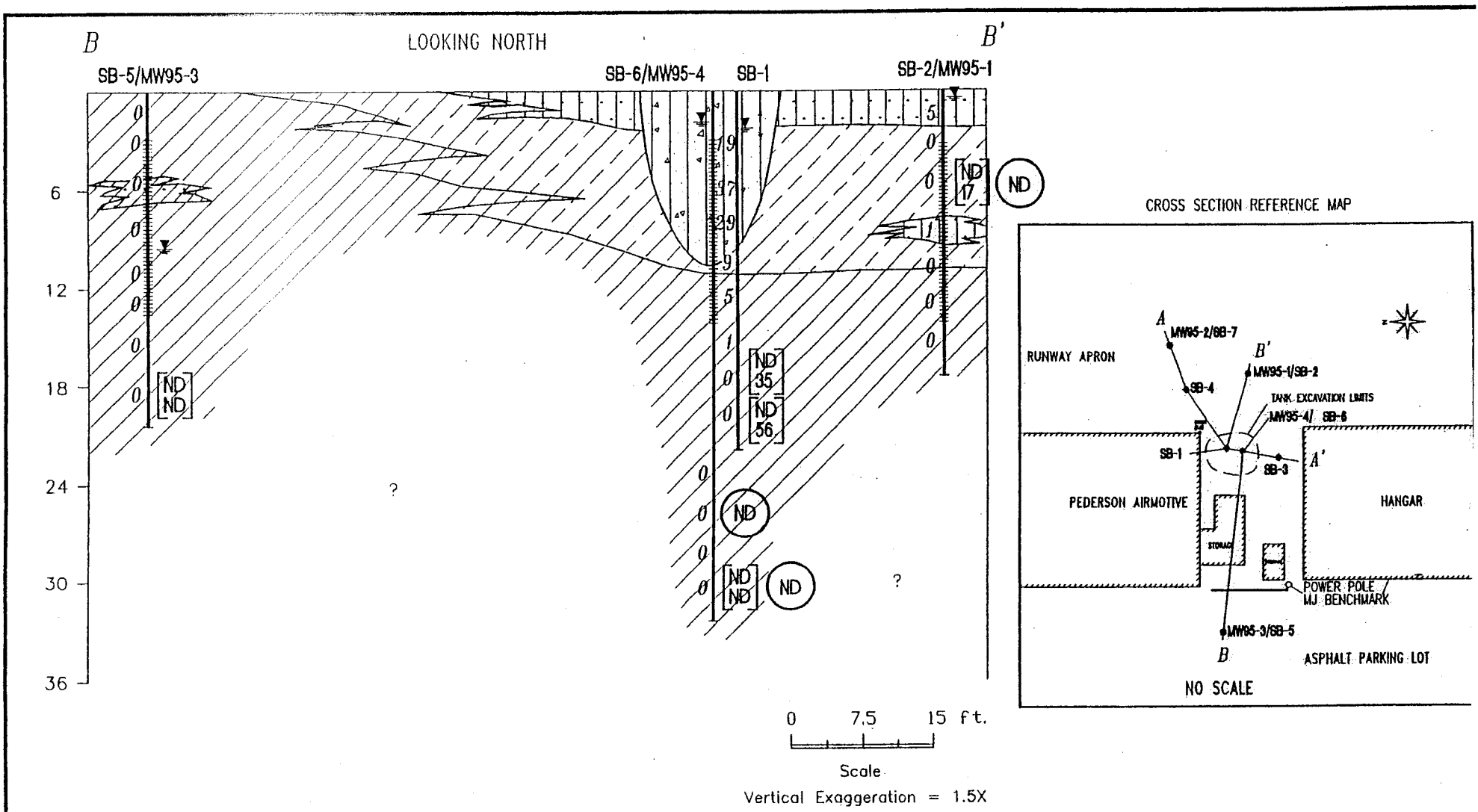

LEGEND

Screened Interval

Water Level Measurement

Poorly-Graded Silty Sand

Silty and Clayey Gravel

Inorganic Clay

Organic Silts and Clay

[ND / 56] = Soil Laboratory Results [DRO / BENZENE] Concentrations in [mg/kg / ug/kg]

(ND) = Field GC Results (BENZENE) Concentrations in [ug/kg]

ND = Not Detected

19 = PID Readings (Reported As ppm In Isobutylene Equivalents)

FIGURE 4

CROSS-SECTION B to B'

PEDERSON AIRMOTIVE
SUPERIOR, WISCONSIN

CREATED BY: IGM DRAWN BY: P

CHK'D BY: OFD

FILE NAME: C:\PROJECTS\1995\95407\XSECB

DATE: 3/6/96 JOB NO. 95

MJ ENVIRONMENTAL CONSULTANTS INC.
101 W. 2ND STREET, SUITE 205, CARNEGIE BLDG.
DULUTH, MINNESOTA

1-800-424-9821 • (218) 722-5880
FAX: (218) 722-5764

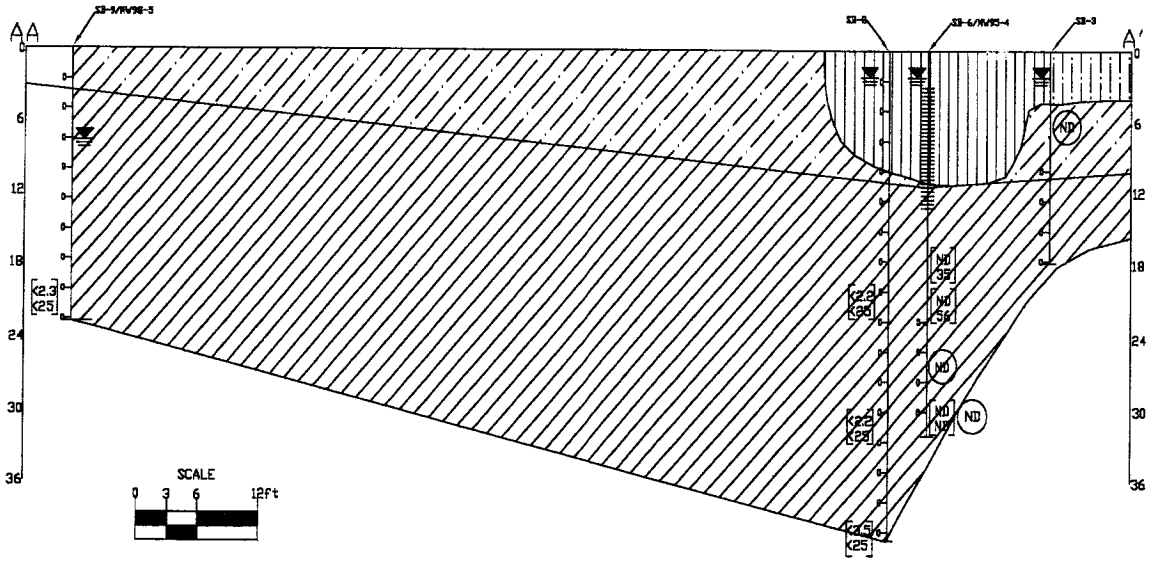

CROSS SECTION REFERENCE MAP

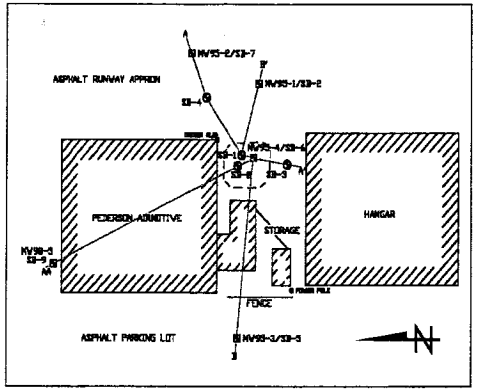

AMERICAN ENGINEERING TESTING, INC.

DULUTH, MINNESOTA

LEGEND

- Silty and Clayey Gravel
- Poorly-Graded Silty Sand
- Inorganic Clay
- Organic Silts and Clay

[3.5 / 25] = Soil Laboratory Results

[DRO / BENZENE] Concentrations in [mg/kg / ug/kg]

(ND) = Field GC Results

BENZENE Concentrations in [ug/kg]

= Screened Interval

= Water Level Measurement

ND = Not Detected

19 = PID Readings (Reported As ppm in Isobutylene Equivalents)

FIGURE ~~3~~ 5

CROSS-SECTION AA TO A'

PEDERSON AIRMOTIVE
SUPERIOR, WISCONSIN

DRAWN BY: ZAE CHECKED BY:

DATE: 5/21/01 AET JOB #: 07-00646