GIS REGISTRY INFORMATION

SITE NAME: Thoma Oil - Harrison Street UST

BRRTS #: 03-71-001292 **FID # (**if appropriate**):**

COMMERCE # (if appropriate**):**

CLOSURE DATE: 08/01/2006

STREET ADDRESS: 2404 Harrison St

CITY: Oshkosh

SOURCE PROPERTY GPS COORDINATES (meters in WTM91 projection)**:** **X=** 637589 **Y=** 398144

CONTAMINATED MEDIA: Groundwater [ ] Soil [ ] Both [x]

OFF-SOURCE GW CONTAMINATION >ES: [ ] **Yes** [x] **No**

IF YES, STREET ADDRESS 1:

GPS COORDINATES (meters in WTM91 projection)**:** **X=** **Y=**

OFF-SOURCE SOIL CONTAMINATION >Generic or Site-Specific RCL (SSRCL): [ ] **Yes** [x] **No**

IF YES, STREET ADDRESS 1:

GPS COORDINATES (meters in WTM91 projection)**:** **X=** **Y=**

CONTAMINATION IN RIGHT OF WAY: [x] **Yes** [ ] **No**

DOCUMENTS NEEDED:

Closure Letter, and any conditional closure letter or denial letter issued	x
Copy of any maintenance plan referenced in the final closure letter.	x
Copy of (soil or land use) deed notice *if any required as a condition of closure*	na
Copy of most recent deed, including legal description, for all affected properties	x
Certified survey map or relevant portion of the recorded plat map (*if referenced in the legal description*) for all affected properties	na
County Parcel ID number, *if used for county*, for all affected properties #915-1959-00-00	x
Location Map which outlines all properties within contaminated site boundaries on USGS topographic map or plat map in sufficient detail to permit the parcels to be located easily (8.5x14" if paper copy). If groundwater standards are exceeded, the map must also include the location of all municipal and potable wells within 1200' of the site.	x
Detailed Site Map(s) for all affected properties, showing buildings, roads, property boundaries, contaminant sources, utility lines, monitoring wells and potable wells. (8.5x14", if paper copy) This map shall also show the location of all contaminated public streets, highway and railroad rights-of-way in relation to the source property and in relation to the boundaries of groundwater contamination exceeding ch. NR 140 ESs and soil contamination exceeding ch. NR 720 generic or SSRCLs.	x
Tables of Latest Groundwater Analytical Results (no shading or cross-hatching)	
Tables of Latest Soil Analytical Results (no shading or cross-hatching)	x
Isoconcentration map(s), *if required for site investigation (SI) (*8.5x14" if paper copy*)*.** The isoconcentration map should have flow direction and extent of groundwater contamination defined. **If not available, include the latest extent of contaminant plume map.**	x
GW: Table of water level elevations, with sampling dates, and free product noted if present	x
GW: Latest groundwater flow direction/monitoring well location map (should be 2 maps if maximum variation in flow direction is greater than 20 degrees)	x
SOIL: Latest horizontal extent of contamination exceeding generic or SSRCLs, with one contour	x
Geologic cross-sections, *if required for SI.* (8.5x14' if paper copy**)**	x
RP certified statement that legal descriptions are complete and accurate	x
Copies of off-source notification letters (if applicable)	
Letter informing ROW owner of residual contamination (if applicable)(public, highway or railroad ROW)	x

State of Wisconsin \ DEPARTMENT OF NATURAL RESOURCES

Jim Doyle, Governor
Scott Hassett, Secretary
Ronald W. Kazmierczak, Regional Director

Oshkosh Service Center
625 E. CTY Y, Suite 700
Oshkosh, Wisconsin 54901-9731
Telephone 920-424-3050
FAX 920-424-4404

August 1, 2006

Mr. Paul Thoma
1219 Algoma Blvd.
Oshkosh, WI 54901

Subject: **Final Case Closure with Conditions Met**
Thoma Bulk Plant (AST & UST sites), 2404 Harrison St., Oshkosh, WI
WDNR BRRTS Activity # 02-71-000404 & # 03-71-001292

Dear Mr. Thoma:

On May 16, 2006, the Northeast Regional Closure Committee reviewed the above referenced cases for closure. This committee reviews environmental remediation cases for compliance with state laws and standards to maintain consistency in the closure of these cases. On May 17, 2006 you were notified that your case was denied closure because direct contact soils had not yet been capped. On July 17, 2006 the Department received documentation that an asphalt cap was placed over the remaining contaminated soil. Based on the correspondence and data provided, it appears that your case meets the requirements of ch. NR 726, Wisconsin Administrative Code. The Department considers this case closed and no further investigation or remediation is required at this time.

Please be aware that pursuant to s. 292.12 Wisconsin Statutes, compliance with the requirements of this letter is a responsibility to which the current property owner and any subsequent property owners must adhere. If these requirements are not followed or if additional information regarding site conditions indicates that contamination on or from the site poses a threat to public health, safety, welfare, or the environment, the Department may take enforcement action under s. 292.11 Wisconsin Statutes to ensure compliance with the specified requirements, limitations or other conditions related to the property or this case may be reopened pursuant to s. NR 726.09, Wis. Adm. Code. It is the Department's intent to conduct inspections in the future to ensure that the conditions included in this letter including compliance with referenced maintenance plans are met.

Pursuant to s. 292.12(2)(a), Wis. Stats., the asphalt cap that currently exists in the location shown on the attached map shall be maintained in compliance with the attached maintenance plan in order to minimize the infiltration of water and prevent additional groundwater contamination that would violate the groundwater quality standards in ch. NR 140, Wis. Adm. Code, and to prevent direct contact with residual soil contamination that might otherwise pose a threat to human health. If soil in the specific locations described above is excavated in the future, the property owner at the time of excavation must sample and analyze the excavated soil to determine if residual contamination remains. If sampling confirms that contamination is present the property owner at the time of excavation will need to determine whether the material would be considered solid or hazardous waste and ensure that any storage, treatment or disposal is in compliance with applicable statutes and rules. In addition, all current and future owners and occupants of the property need to be aware that excavation of the contaminated

soil may pose an inhalation or other direct contact hazard and as a result special precautions may need to be taken during excavation activities to prevent a health threat to humans.

The following activities are prohibited on any portion of the property where the asphalt cap is required as shown on the attached map, unless prior written approval has been obtained from the Wisconsin Department of Natural Resources: 1) removal of the existing barrier; 2) replacement with another barrier; 3) excavating or grading of the land surface; 4) filling on capped or paved areas; 5) plowing for agricultural cultivation; or 6) construction or placement of a building or other structure.

In addition, depending on site-specific conditions, construction over contaminated materials may result in vapor migration into enclosed structures or migration along newly placed underground utility lines. The potential for vapor inhalation and mitigation should be evaluated when planning any future redevelopment, and measures should be taken to ensure the continued protection of public health, safety, welfare and the environment at the site.

Your site will be listed on the DNR Remediation and Redevelopment GIS Registry of Closed Remediation Sites. Information that was submitted with your closure request application will be included on the GIS Registry. To review the sites on the GIS Registry web page, visit http://dnr.wi.gov/org/aw/rr/gis/index.htm. If your property is listed on the GIS Registry because of remaining contamination and you intend to construct or reconstruct a well, you will need prior Department approval in accordance with s. NR 812.09(4)(w), Wis. Adm. Code. To obtain approval, Form 3300-254 needs to be completed and submitted to the DNR Drinking and Groundwater program's regional water supply specialist. This form can be obtained on-line http://www.dnr.state.wi.us/org/water/dwg/3300254.pdf or at the web address listed above for the GIS Registry.

Section 101.143, Wis. Stats., requires that PECFA claimants seeking reimbursement of interest costs, for sites with petroleum contamination, submit a final reimbursement claim within 120 days after they receive a closure letter on their site. For claims not received by the PECFA Program within 120 days of the date of this letter, interest costs after 60 days of the date of this letter will not be eligible for PECFA reimbursement. If there is equipment purchased with PECFA funds remaining at the site, contact the Commerce PECFA Program to determine the method for salvaging the equipment.

The Department appreciates your efforts to restore the environment at this site. If you have any questions regarding this closure decision or anything outlined in this letter, please contact Casey Jones at 920-303-5424.

Sincerely,

Bruce Urben
Northeast Remediation & Redevelopment Team Supervisor

Enclosures: Map and Cap Maintenance Plan

Electronic copies: Brian Youngwirth, MES
Kevin McKnight, WDNR Project Manager

May 26, 2006

Ms. Casey Jones
Hydrogeologist
Wisconsin Department of Natural Resources
625 E. County Road Y, Suite 700
Oshkosh, WI 54901

RE: CAP MAINTENANCE PLAN
Thoma Bulk Plant
2404 Harrison Street
Oshkosh, WI
MES Project No. 12-31002
WDNR ID No. 02-71-000404 and 03-71-001292

Dear Ms. Jones:

Midwest Engineering Services, Inc., (MES) has prepared this Cap Maintenance Plan for the referenced site on behalf of Mr. Paul Thoma, the current owner of the above-mentioned property.

The Name and Address of the party responsible for maintaining the cap.

Mr. Paul Thoma
1219 Algoma Blvd.
Oshkosh, WI 54901
Telephone No.: 920-379-2383

If the ownership should change, Mr. Thoma will notify the WDNR of the responsible party name, and the new responsible party should be notified of the duties to maintain the cap.

- *Schedule of annual or on-going inspections:*

The asphalt cap in the area of the western portion of the site (see figure) will be inspected annually. The integrity of the cap will be photo-documented annually, ~~and pictures of the above mentioned area will be forwarded to the WDNR at 625 East~~

Not necessary CJ

~~County Road Y, Oshkosh, WI 54902, attention Mr. Kevin McKnight.~~ Additionally, a log documenting any cap maintenance will be kept for WDNR review, if necessary.

- *Repair of cap as necessary*

  If imperfections are observed during the inspection, they will be repaired as necessary.

If you have any questions, please contact me at (920) 379-2383 or MES at (920) 745-2200.

Sincerely Yours,

Paul Thoma

Mr. Paul Thoma

c: Brian Youngwirth (Midwest Engineering Services Inc.)

Attachments

Figure 2 Proposed Direct Contact Soil Cap

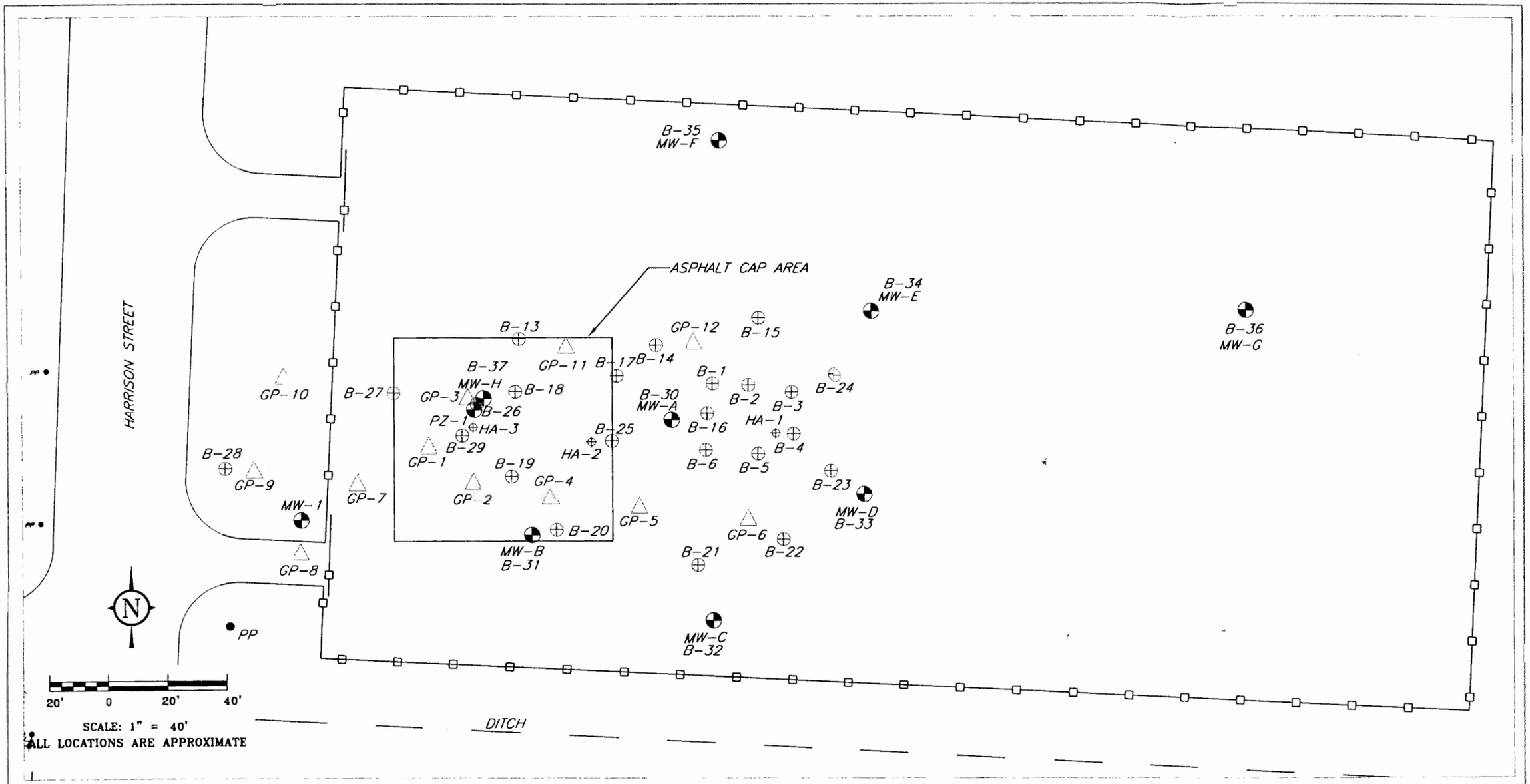

FIGURE 3: ASPHALT CAP AREA

MES	MIDWEST ENGINEERING SERVICES 104 W. JACKSON ST., RIPON, WI 54971 TEL: (920) 745-2200 FAX: (920) 745-2222	12-31002 DRAWN BY: KP DATE: 7/10/06 ID#: PLOT3	THOMA BULK PLANT OSHKOSH, WISCONSIN CAP MAINTENANCE PLAN

State of Wisconsin \ DEPARTMENT OF NATURAL RESOURCES

Jim Doyle, Governor
Scott Hassett, Secretary
Ronald W. Kazmierczak, Regional Director

Oshkosh Service Center
625 E. CTY Y, Suite 700
Oshkosh, Wisconsin 54901-9731
Telephone 920-424-3050
FAX 920-424-4404

May 17, 2006

FILE

Mr. Paul Thoma
1219 Algoma Blvd.
Oshkosh, WI 54901

Subject: Case Closure Denial—Need Cap Documentation
Thoma Bulk Plant (AST & UST sites), 2404 Harrison St., Oshkosh, WI
WDNR BRRTS Activity # 02-71-000404 & # 03-71-001292

Dear Mr. Thoma:

On May 16, 2006, the Northeast Regional Closure Committee reviewed your request for closure of the case described above. The Northeast Regional Closure Committee reviews environmental remediation cases for compliance with state rules and statutes to maintain consistency in the closure of these cases. After careful review of your closure request, the closure committee has denied closure because additional requirements must be met.

CAP OR REMOVE DIRECT CONTACT SOILS

In order to make a formal closure determination the Department needs documentation that the direct contact soils are capped or removed from the site (photos, map outlining area of cover). The Committee may approve closure through the proposed pathway that included capping the entire west half of the lot with asphalt.

MAINTENANCE PLAN

To close this site, the Department requires that the impermeable cover (proposed asphalt) at the site must be maintained to minimize direct contact concerns and protect groundwater. The cover is to be maintained in accordance with a plan prepared and submitted to the Department pursuant to s. NR 724.13(2), Wis. Adm. Code. The maintenance plan should be submitted for Department review and approval once the area has been capped.

PURGE WATER, WASTE AND SOIL PILE REMOVAL

Any remaining monitoring well purge water, waste and/or soil piles generated as part of site investigation or remediation activities must be removed from the site and disposed of or treated in accordance with Department of Natural Resources' rules. Once that work is completed, please send a letter documenting that any remaining purge water, waste and/or soil piles have been removed.

When all the above requirements have been satisfied, please submit a letter, together with any required documentation, to let me know that applicable requirements have been met. Your site will be listed on the DNR Remediation and Redevelopment GIS Registry of Closed Remediation Sites. Information that was submitted with your closure request application will be included on the GIS Registry. To review the sites on the GIS Registry web page, visit http://maps.dnr.state.wi.us/brrts.

Note: Case closure will be approved only if all the above requirements have been satisfied, including submitting the required documentation to the Department. **If these requirements have not been met your site will remain "open" and additional remedial actions may be necessary by you to eliminate the need for these requirements.**

We appreciate your efforts to restore the environment at this site. If you have any questions regarding this letter, please contact me at 920-303-5424.

Sincerely,

Casey L. Jones

Casey L. Jones
Hydrogeologist
Remediation & Redevelopment Program

Electronic copy: Brian Youngwirth, MES
Kevin McKnight, WDNR Project Manager

UAC

Quit Claim Deed

1230121

REGISTER'S OFFICE
WINNEBAGO COUNTY, WI
RECORDED ON

02/11/2003 11:25AM

SUSAN WINNINGHOFF
REGISTER OF DEEDS

RECORDING FEE	11.00
TRANSFER FEE	#2
# OF PAGES	1

Document Number **Document Title**

The **CITY OF OSHKOSH**, a Wisconsin municipality, located in Winnebago County, Wisconsin, quit claims to **STEVEN THOMA, and DARRELL THOMA,** the following described real estate in Winnebago County, State of Wisconsin:

Lot 1 in certified survey map no. 5090, part of the S.W. 1/4 of the N.E. 1/4 of Section 12, T18N, R16E, 15th Ward, City of Oshkosh, Winnebago County, Wisconsin, bounded and described as follows;

Commencing at the c. 1/4 corner of said section 12, thence south 89°30'04" east along the south line of the N.E. 1/4 of said section 435.34 ft. to a point on the west right of way line of the former Soo Line railroad; thence north 02°40'19" east along said line 210.57 ft.; Thence north 89°30'43" east 33.02 ft. to a point on the centerline of said former railroad right of way and the point of beginning; thence south 02°40'19" west along said centerline 210.58 ft. to a point where the centerline of said former railroad right of way intersects the south line of the N.E. 1/4 of said section; thence south 89830'04" west 33.02 ft. to a point on the west right of way line of said former railroad and the point of beginning. Said parcel contains 0.1595 acres and is subject to all existing easements and restrictions of record.

Recording Area

Name and Return Address
Darrell Thoma
5254 Samers Bay Rd
Omro WI 54963-9445

915-1959-00-00 (partial)
Parcel Identification Number (PIN)

Dated this 11th day of February 2003.

CITY OF OSHKOSH

Richard A. Wollangk, City Manager

Pamela R. Ubrig, City Clerk

STATE OF WISCONSIN)
) ss.
WINNEBAGO COUNTY)

Signatures of Richard A. Wollangk, City Manager and Pamela R. Ubrig, City Clerk, for the City of Oshkosh are authenticated this 11th day of February 2003.

Louis Zamzow
~~Member, State Bar of Wisconsin~~ or
Notary Public, Winnebago Co., WI
My Commission 1-8-06

This instrument drafted by:
Attorney Warren P. Kraft
Oshkosh, WI 54903-1130

CERTIFIED SURVEY MAP NO. 5090

SHEET 1 OF 4

NO.3961

PART OF THE S.W. 1/4 OF THE N.E. 1/4 OF SECTION 12, T18N, R16E, 15TH WARD, CITY OF OSHKOSH, WINNEBAGO COUNTY, WISCONSIN.

SUBDIVIDER: DARRELL AND STEVEN THOMA
2404 AND 2414 HARRISON STREET

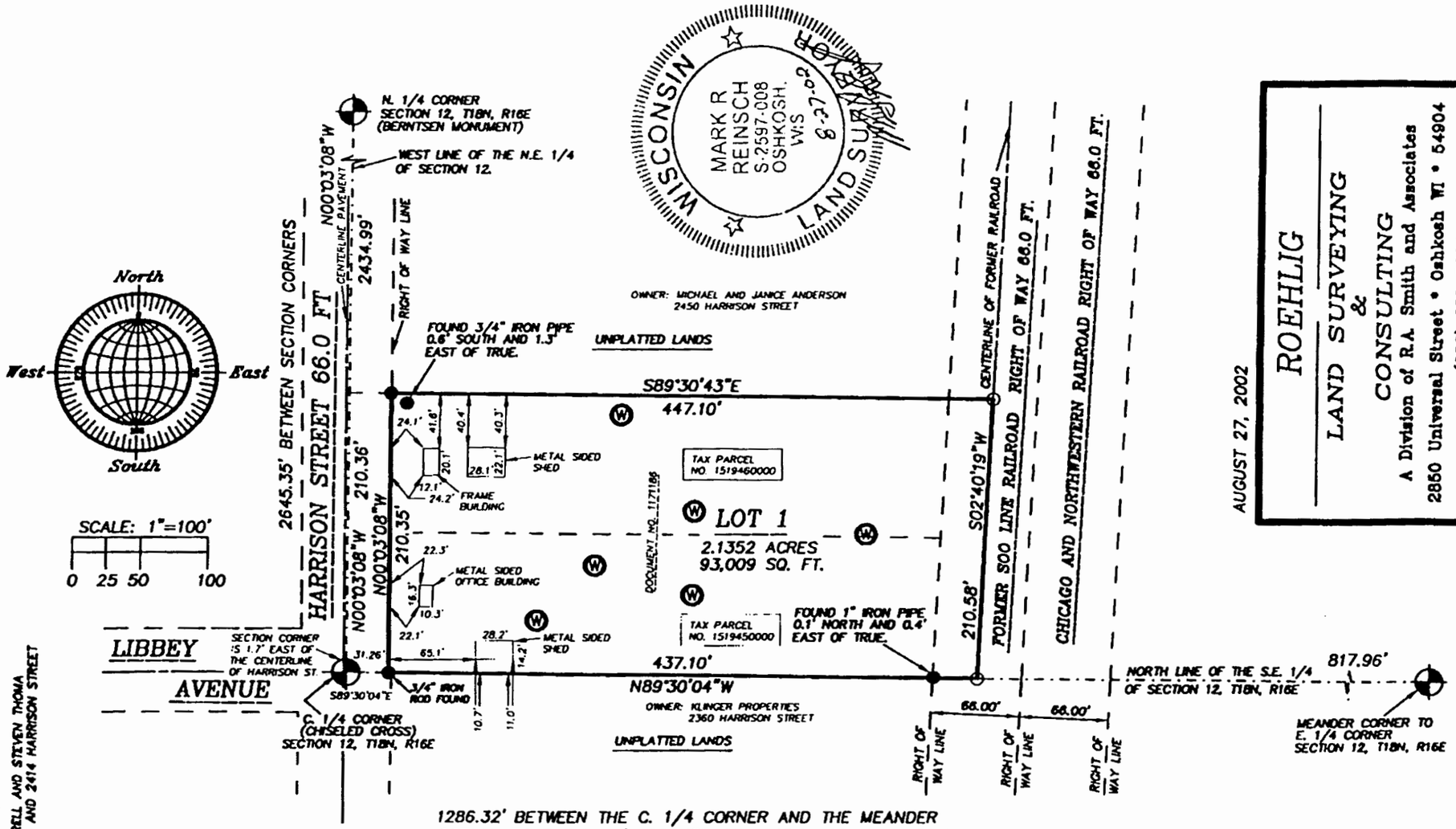

1286.32' BETWEEN THE C. 1/4 CORNER AND THE MEANDER CORNER TO THE E. 1/4 CORNER OF SECTION 12, T18N, R16E.

BEARINGS ARE REFERENCED TO THE WEST LINE OF THE N.E. 1/4 OF SECTION 12, T18N, R16E, ASSUMED TO BEAR NORTH 00°03'08" WEST.

DISTANCES ARE MEASURED TO THE NEAREST HUNDREDTH OF A FOOT.

● DENOTES 1" DIAMETER IRON PIPE FOUND UNLESS OTHERWISE NOTED.

○ DENOTES 3/4" DIAMETER IRON ROD, 24" LONG SET, WEIGHING NOT LESS THAN 1.50 LBS PER LINEAL FOOT.

( ) DENOTES RECORDED DIMENSION WHERE DIFFERENT FROM ACTUAL MEASUREMENT.

Ⓦ DENOTES EXISTING MONITORING WELL.

AUGUST 27, 2002

NO. 3961

ROEHLIG
LAND SURVEYING
&
CONSULTING
A Division of R.A. Smith and Associates
2850 Universal Street • Oshkosh WI • 54904
(920) 233-2884

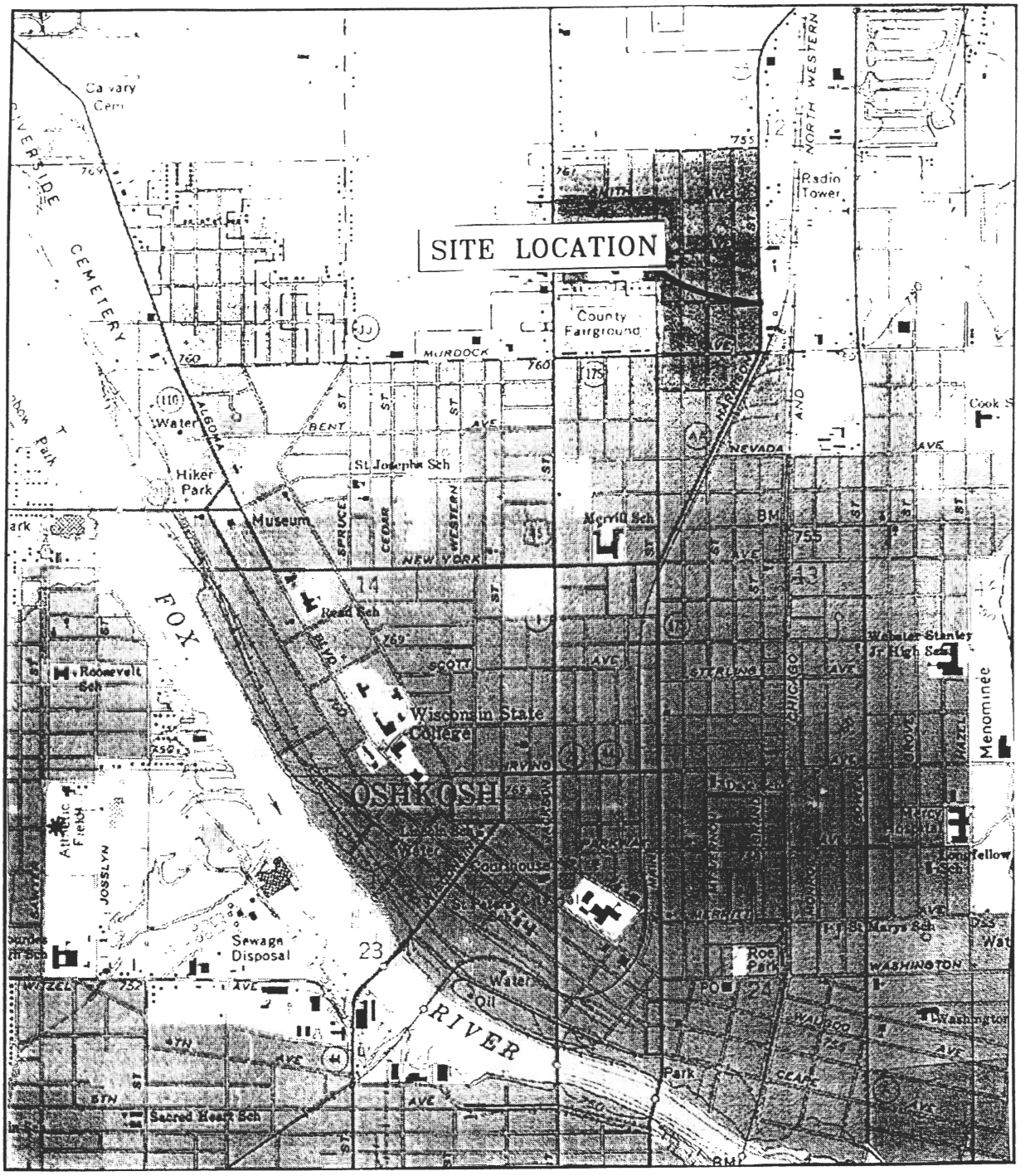

OSHKOSH QUADRANGLE
U.S.G.S. 7.5 MINUTE SERIES
(TOPOGRAPHIC) WINNEBAGO COUNTY
WISCONSIN

N

SCALE: 1:24,000

FIGURE 1: SITE LOCATION MAP

MES MIDWEST ENGINEERING SERVICES	104 W. JACKSON ST., RIPON, WI 54971 TEL: (920) 745-2200 FAX: (920) 745-2222	12-31002 DATE: 10/7/04 ID# PLOT	THOMA BULK PLANT OSHKOSH, WISCONSIN GIS REGISTRATION PACKAGE

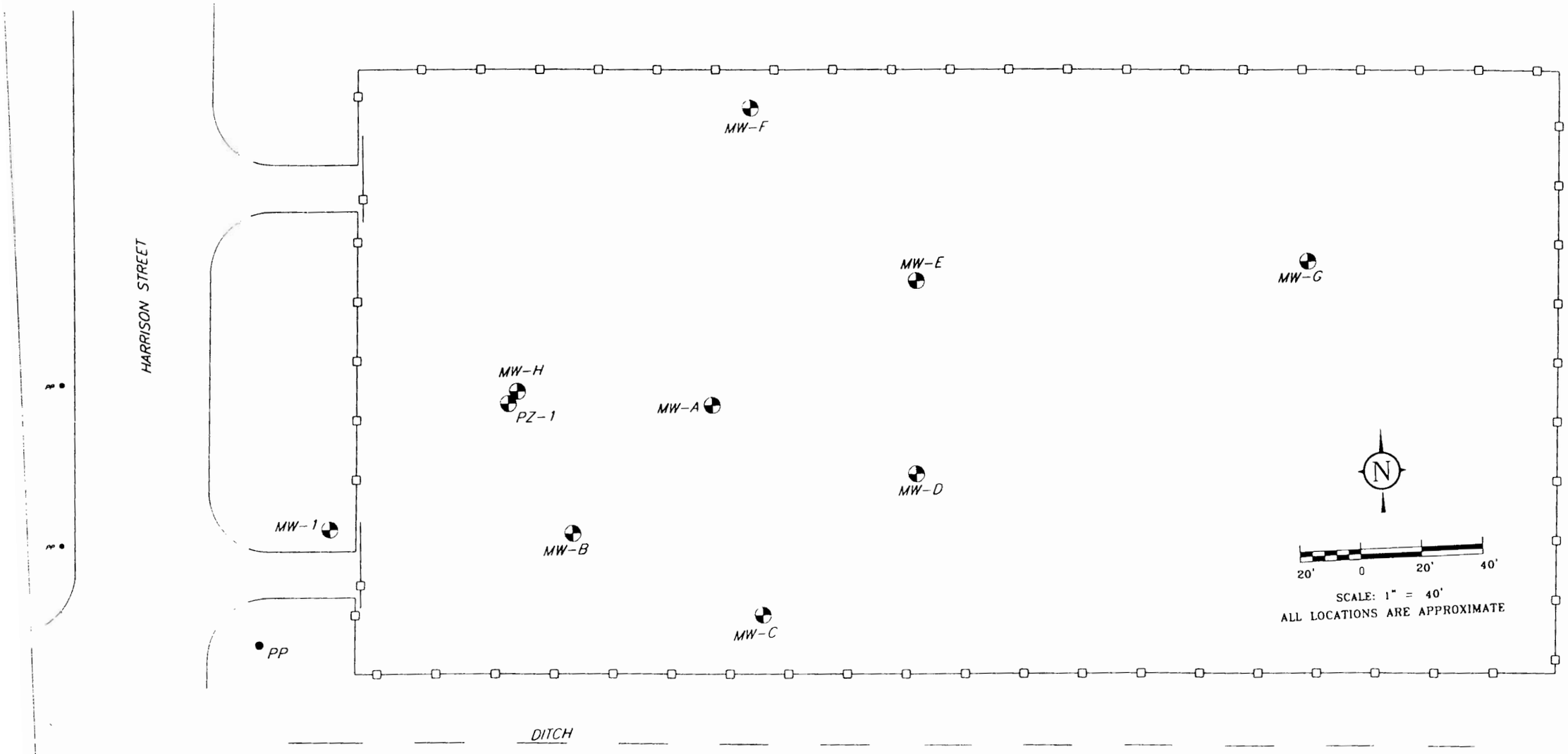

FIGURE 2: SITE PLAN MAP

THOMA BULK PLANT
OSHKOSH, WISCONSIN
GIS REGISTRATION PACKAGE

MES
MIDWEST ENGINEERING SERVICES
104 W. JACKSON ST., RIPON, WI 54971
TEL: (920) 745-2200 FAX: (920) 745-2222

12-31002
DRAWN BY KP
DATE 10/11/04
ID# PLOT3

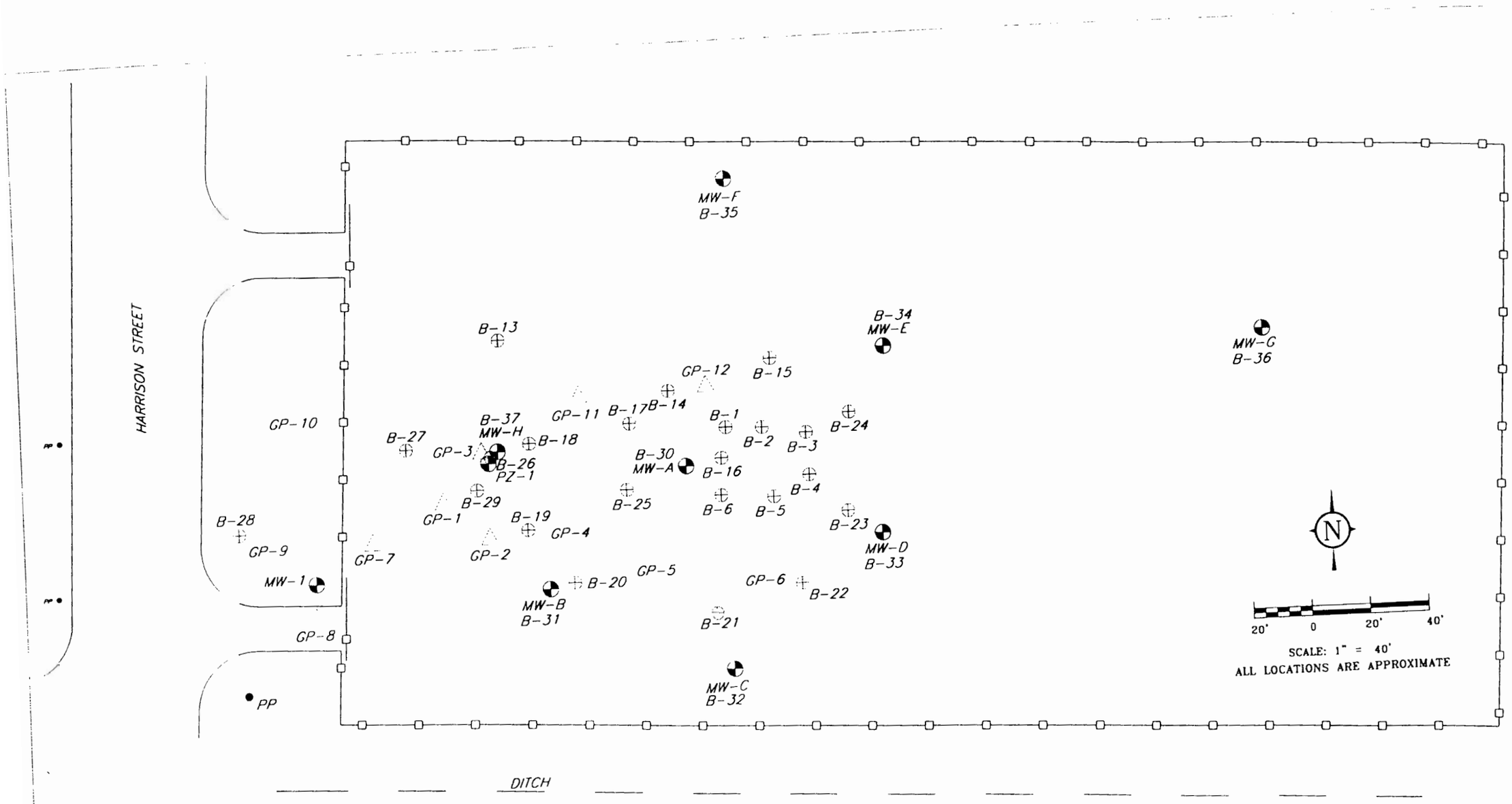

FIGURE 3: SOIL BORING, PROBE, MONITORING WELL AND PIEZOMETER LOCATION MAP

THOMA BULK PLANT
OSHKOSH, WISCONSIN
GIS REGISTRATION PACKAGE

MES
MIDWEST ENGINEERING SERVICES
104 W. JACKSON ST., RIPON, WI 54971
TEL: (920) 745-2200 FAX: (920) 745-2222

12-31002
DRAWN BY KP
DATE 10/11/04
ID# PLOT3

TABLE 2
SUMMARY OF GROUNDWATER ANALYTICAL RESULTS
THOMA BULK PLANT
MES PROJECT #12-31002

Monitoring Well	NR 140		MW-A						MW-B						MW-C		
Sampling Date	ES	PAL	3/20/2002	6/25/2002	9/11/2002	12/13/2002	5/7/2003	3/13/2006	3/20/2002	6/25/2002	9/11/2002	12/13/2002	5/7/2003	3/13/2006	3/20/2002	6/25/2002	5/22/2003
GASOLINE RANGE ORGANICS (GRO), DIESEL RANGE ORGANICS (DRO) (µg/L)																	
GRO	250		**4330**	**4680**	**4430**	**4320**	NA	NA	**2850**	**4990**	**5660**	**6020**	NA	NA	**450**	**512**	NA
DRO	250		**21200**	**70800**	**211000**	**102000**	NA	NA	**3240**	**4960**	**5350**	**4790**	NA	NA	**2220**	**1330**	NA
PETROLEUM VOLATILE ORGANIC COMPOUNDS (PVOC) (µg/L)																	
Benzene	5	0.5	**484**	**849**	**776**	**705**	**791**	**630**	**327**	**689**	**635**	**660**	**455**	**53**	1.6	3	<0.5
Ethylbenzene	700	140	252	342	292	239	200	280	222	559	540	490	139	5.5	1.89	5.9	<0.5
Methyl tert-butyl ether	60	12	<15.0	<3.00	<6.00	<3.00	<10.0	4.9	18.3	<3.00	<3.00	<3.00	**70.8**	9.1	0.668	<0.3	<0.2
Toluene	1000	200	67.7	119	91	80.1	95.3	96	19.9	48.3	44.5	40.6	17.5	1.9	0.611	3.11	<0.5
1,2,4 -Trimethylbenzene	480	96	324	308	297	273	237	260	112	299	309	230	102	1.7	<0.4	<0.4	<1.0
1,3,5 -Trimethylbenzene			95.3	94.1	87.6	89.5	106	88	40.8	104	107	73.6	40.4	<0.40	<0.31	<0.31	<1.0
Xylenes, -m, -p	10000	1000	425	467	282	204	397	482	179	439	414	282	148	<1.1	1.14	1.83	<0.5
Xylenes, -o			36.8	47.3	49	38.5			12.6	29.3	27.6	16.6			<0.3	1.21	
OTHER DETECTED VOLATILE ORGANIC COMPOUNDS (VOC) (µg/L)																	
sec-Butylbenzene	NE	NE	25.7	NA	NA	NA	NA	NA	<6.60	NA	NA	NA	NA	NA	8.43	NA	NA
n-Butylbenzene	NE	NE	<18.0	NA	NA	NA	NA	NA	<7.20	NA	NA	NA	NA	NA	15.1	NA	NA
1,2-Dichloroethane	5	0.5	<8.50	NA	NA	NA	NA	NA	<3.40	NA	NA	NA	NA	NA	<0.17	NA	NA
1,1-Dichloroethane	850	85	<18.0	NA	NA	NA	NA	NA	<7.20	NA	NA	NA	NA	NA	<0.36	NA	NA
Isopropylbenzene	NE	NE	<15.5	NA	NA	NA	NA	NA	7.93	NA	NA	NA	NA	NA	2.7	NA	NA
p-Isopropyltoluene	NE	NE	<16.0	NA	NA	NA	NA	NA	<6.40	NA	NA	NA	NA	NA	<0.32	NA	NA
Naphthalene	40	8	**302**	**348**	**377**	**413**	**136**	**270**	**46.9**	**104**	**116**	**102**	**60.0**	<0.47	<0.8	<0.8	<0.2
n-Propylbenzene	NE	NE	<15.0	NA	NA	NA	NA	NA	<6.00	NA	NA	NA	NA	NA	4.4	NA	NA
LEAD (µg/L)																	
Lead	15	1.5	**59.6**	**36.7**	11.8	3.05	<0.005	NA	<1.00	<1.00	<1.00	<1.00	NA	NA	<1.00	<1.00	NA

ES = Enforcement Standard
PAL = Preventive Action Limit
µg/L = micrograms per liter
NA = Parameter not analyzed

NE = NR 140 ES not established
Q = Analyte detected above laboratory limit of detection but below limit of quantitation.
Bold indicates analytical results above NR 140 ES

TABLE 2
SUMMARY OF GROUNDWATER ANALYTICAL RESULTS
THOMA BULK PLANT
MES PROJECT #12-31002

Monitoring Well	NR 140		MW-D						MW-E					
Sampling Date	ES	PAL	3/20/2002	6/25/2002	9/11/2002	12/13/2002	5/7/2003	3/13/2006	3/20/2002	6/25/2002	9/11/2002	12/13/2002	5/7/2003	3/13/2006
GASOLINE RANGE ORGANICS (GRO), DIESEL RANGE ORGANICS (DRO) (µg/L)														
GRO	250		174	**305**	**480**	**857**	NA	NA	**389**	**296**	**258**	58.7	NA	NA
DRO	250		**5570**	**4560**	**4180**	**4930**	NA	NA	**6620**	**4300**	**4760**	**689**	NA	NA
PETROLEUM VOLATILE ORGANIC COMPOUNDS (PVOC) (µg/L)														
Benzene	5	0.5	2.96	**6.37**	**15.6**	**19.6**	**33.8**	**23.0**	2.09	1.99	2.18	0.427	<0.5	<0.21
Ethylbenzene	700	140	3.77	14.00	24.1	31.1	61.1	30.0	8.08	11.90	11.50	<0.5	<0.5	<0.40
Methyl tert-butyl ether	60	12	**64.90**	39.10	15.1	<0.3	11.70	3.60	<0.3	<0.3	<0.3	<0.3	<0.2	<0.36
Toluene	1000	200	0.85	1.32	1.65	2.73	<10.0	2.70	0.91	0.398	<0.3	<0.3	<0.5	<0.36
1,2,4-Trimethylbenzene	480	96	2.44	18.1	10.6	12.2	80.6	16.0	8.25	7.92	1.68	<0.4	<1.0	<0.39
1,3,5-Trimethylbenzene			6.45	11.6	13.2	11.7	51.1	6.9	12.1	7.05	8.5	<0.31	<0.5	<0.40
Xylenes, -m, -p	10000	1000	3.64	9.23	8.01	10.5	66.0	14.0	3.7	2.88	1.43	<0.62	<0.5	<1.1
Xylenes, -o			0.74	0.96	0.79	0.96		<0.36	1.47	0.536	<0.3	<0.3	<0.5	
OTHER DETECTED VOLATILE ORGANIC COMPOUNDS (VOC) (µg/L)														
sec-Butylbenzene	NE	NE	<0.33	NA	NA	NA	NA	NA	<0.33	NA	NA	NA	NA	NA
n-Butylbenzene	NE	NE	6.60	NA	NA	NA	NA	NA	20.7	NA	NA	NA	NA	NA
1,2-Dichloroethane	5	0.5	<0.36	NA	NA	NA	NA	NA	<0.17	NA	NA	NA	NA	NA
1,1-Dichloroethane	850	85	10.1	NA	NA	NA	NA	NA	<0.36	NA	NA	NA	NA	NA
Isopropylbenzene	NE	NE	1.39	NA	NA	NA	NA	NA	4.9	NA	NA	NA	NA	NA
p-Isopropyltoluene	NE	NE	<0.32	NA	NA	NA	NA	NA	<0.32	NA	NA	NA	NA	NA
Naphthalene	40	8	2.94	33.4	**74.3**	**108**	**234**	**43**	7.5	12.7	15.7	<0.8	<2.0	NA
n-Propylbenzene	NE	NE	0.977	NA	NA	NA	NA	NA	3.22	NA	NA	NA	NA	NA
LEAD (µg/L)														
Lead	15	1.5	<1.00	<1.00	<1.00	<1.00	NA	NA	<1.00	<1.00	1.59	1.44	<0.005	NA

ES = Enforcement Standard
PAL = Preventive Action Limit
µg/L = micrograms per liter
NA = Parameter not analyzed

NE = NR 140 ES not established
Q = Analyte detected above laboratory limit of detection but below limit of quantitation.
Bold indicates analytical results above NR 140 ES

TABLE 2
SUMMARY OF GROUNDWATER ANALYTICAL RESULTS
THOMA BULK PLANT
MES PROJECT #12-31002

Monitoring Well	NR 140		MW-F						MW-G					
Sampling Date	ES	PAL	3/20/2002	6/25/2003	9/11/2002	12/13/2002	5/7/2003	3/13/2006	3/20/2002	6/25/2002	9/11/2002	12/13/2002	5/7/2003	3/13/2006
GASOLINE RANGE ORGANICS (GRO), DIESEL RANGE ORGANICS (DRO) (µg/L)														
GRO	250		**188**	**426**	**908**	**316**	NA	NA	**442**	**1710**	**634**	**83.4**	NA	NA
DRO	250		**566**	**429**	**354**	**685**	NA	NA	**9280**	**29900**	**34200**	**22000**	NA	NA
PETROLEUM VOLATILE ORGANIC COMPOUNDS (PVOC) (µg/L)														
Benzene	5	0.5	**5.32**	**62.3**	**129**	**33.5**	**24.6**	<0.14	0.49	<0.31	<0.31	<0.31	<0.5	<0.14
Ethylbenzene	700	140	4.88	17.5	19.1	5.44	24.8	<0.40	0.994	<0.5	<0.5	<0.5	<0.5	<0.40
Methyl tert-butyl ether	60	12	<0.3	<0.3	<0.3	<0.3	7.38	<0.36	<0.3	<0.3	<0.3	<0.3	<0.2	<0.36
Toluene	1000	200	0.78	1.05	2.06	0.377	1.16	<0.36	1.06	1.83	1.77	1.45	0.607	<0.36
1,2,4-Trimethylbenzene	480	96	3	1.58	2.03	0.792	24.4	<0.39	<0.4	<0.4	<0.4	<0.4	<1.0	<0.39
1,3,5-Trimethylbenzene			7.04	0.381	0.732	<0.31	46.7	<0.40	<0.31	<0.31	<0.31	<0.31	<1.0	<0.40
Xylenes, -m, -p	10000	1000	1.43	1.19	<0.62	<0.62	9.18	<1.1	<0.62	<0.62	<0.62	<0.62	<0.5	<1.1
Xylenes, -o			<0.3	0.328	<0.3	<0.3			<0.3	<0.3	<0.3	<0.3	<0.5	
OTHER DETECTED VOLATILE ORGANIC COMPOUNDS (VOC) (µg/L)														
sec-Butylbenzene	NE	NE	1.6	NA	NA	NA	NA	NA	<0.33	NA	NA	NA	NA	NA
n-Butylbenzene	NE	NE	6.84	NA	NA	NA	NA	NA	<0.36	NA	NA	NA	NA	NA
1,2-Dichloroethane	5	0.5	<0.17	NA	NA	NA	NA	NA	<0.17	NA	NA	NA	NA	NA
1,1-Dichloroethane	850	85	<0.36	NA	NA	NA	NA	NA	<0.36	NA	NA	NA	NA	NA
Isopropylbenzene	NE	NE	2.84	NA	NA	NA	NA	NA	<0.31	NA	NA	NA	NA	NA
p-Isopropyltoluene	NE	NE	<0.32	NA	NA	NA	NA	NA	<0.32	NA	NA	NA	NA	NA
Naphthalene	40	8	1.3	0.829	<0.8	<0.8	14.9	<0.47	1.29	1.71	1.15	2.48	<2.0	<0.47
n-Propylbenzene	NE	NE	2.78	NA	NA	NA	NA	NA	<0.3	NA	NA	NA	NA	NA
LEAD (µg/L)														
Lead	15	1.5	<1.00	<1.00	<1.00	<1.00	NA	NA	<1.00	<1.00	1.06	<1.00	NA	NA

ES = Enforcement Standard
PAL = Preventive Action Limit
µg/L = micrograms per liter
NA = Parameter not analyzed

NE = NR 140 ES not established
Q = Analyte detected above laboratory limit of detection but below limit of quantitation.
Bold indicates analytical results above NR 140 ES

TABLE 2
SUMMARY OF GROUNDWATER ANALYTICAL RESULTS
THOMA BULK PLANT
MES PROJECT #12-31002

Monitoring Well	NR 140		MW-H				MW-1							PZ-1	
Sampling Date	ES	PAL	3/20/2002	6/25/2002	9/11/2002	12/13/2002	11/28/2001	3/20/2002	6/25/2002	9/11/2002	12/13/2002	5/7/2003	3/13/2006	8/5/2003	3/13/2006
GASOLINE RANGE ORGANICS (GRO), DIESEL RANGE ORGANICS (DRO) (µg/L)															
GRO	250		**22100**	**21000**	**13000**	**13100**	<50.0	**487**	52.8	**367**	**450**	NA	NA	NA	NA
DRO	250		**20700**	**42600**	**11100**	**7440**	NA	**1670**	**500**	**693**	**1270**	NA	NA	NA	NA
PETROLEUM VOLATILE ORGANIC COMPOUNDS (PVOC) (µg/L)															
Benzene	5	0.5	**5050**	**4230**	**3610**	**3140**	<0.16	**7.25**	<0.31	<0.31	0.772	<0.5	<0.14	<0.5	<0.21
Ethylbenzene	700	140	**1090**	**1450**	**937**	**1040**	<0.5	15.8	<0.5	1.04	4.27	<0.5	Q	<0.5	<0.40
Methyl tert-butyl ether	60	12	<60.0	<30.0	<15.0	<6.00	6.95	<1.50	<0.3	<0.3	<0.3	<0.2	<0.36	4.86	2
Toluene	1000	200	850	407	357	97.2	3.75	2.27	0.588	6.68	6.47	<0.5	<0.36	<0.5	<0.36
1,2,4-Trimethylbenzene	480	96	**1550**	**1490**	**950**	**980**	<0.4	32.9	<0.4	0.633	2.8	<1.0	Q	<1.0	<0.39
1,3,5-Trimethylbenzene			434	415	255	263	<0.17	9.09	<0.31	<0.31	0.405	<1.0	<0.40	<1.0	<0.40
Xylenes, -m, -p	10000	1000	4740	3910	2290	1340	<0.4	41.5	<0.62	<0.62	1.57	<0.5	<1.1	<0.5	<1.1
Xylenes, -o			500	455	663	216	<0.17	3.32	<0.3	<0.3	1.72	<0.5		<0.5	
OTHER DETECTED VOLATILE ORGANIC COMPOUNDS (VOC) (µg/L)															
sec-Butylbenzene	NE	NE	<66.0	NA	NA	NA	NA	<1.65	NA	NA	NA	NA	NA	<0.5	NA
n-Butylbenzene	NE	NE	357	NA	NA	NA	NA	16.8	NA	NA	NA	NA	NA	<0.5	NA
1,2-Dichloroethane	5	0.5	<34.0	NA	NA	NA	NA	<0.85	NA	NA	NA	NA	NA	4.11	NA
1,1-Dichloroethane	850	85	<72.0	NA	NA	NA	NA	<1.80	NA	NA	NA	NA	NA	<0.5	NA
Isopropylbenzene	NE	NE	67.5	NA	NA	NA	NA	4.26	NA	NA	NA	NA	NA	<0.5	NA
p-Isopropyltoluene	NE	NE	<64.0	NA	NA	NA	NA	<1.60	NA	NA	NA	NA	NA	<0.5	NA
Naphthalene	40	8	**435**	**494**	**313**	**314**	<0.8	4.71	<0.8	<0.8	16.5	<2.0	Q	<2.0	NA
n-Propylbenzene	NE	NE	167	NA	NA	NA	NA	10.1	NA	NA	NA	NA	NA	<0.5	NA
LEAD (µg/L)															
Lead	15	1.5	5.89	4.42	4.36	3.17	<1.00	<1.00	<1.00	1.17	<1.00	NA	NA	<0.005	NA

ES = Enforcement Standard
PAL = Preventive Action Limit
µg/L = micrograms per liter
NA = Parameter not analyzed

NE = NR 140 ES not established
Q = Analyte detected above laboratory limit of detection but below limit of quantitation.
Bold indicates analytical results above NR 140 ES

TABLE 1
SUMMARY OF SOIL ANALYTICAL RESULTS
THOMA BULK PLANT
MES PROJECT #12-31002

Sample No.	NR 72 RCL	NR 74 SSL	NR 74 DCL	B1			B-2	B-3	B-4	B-5	B-6
Sampling Date				8/11/94	2/21/96		8/11/94	8/11/94	8/11/94	8/11/94	8/11/94
Sample Depth (feet)				1-2	3	7	1-2	1-2	1-2	1-2	1-2
GASOLINE RANGE ORGANICS (GRO), DIESEL RANGE ORGANICS (DRO) (mg/kg)											
GRO	250	NE	NE	ND	**301**	<0.9	ND	ND	ND	ND	ND
DRO	250	NE	NE	**2500**	**1230**	6.7	**2300**	**7400**	**10000**	**18000**	170
PETROLEUM VOLATILE ORGANIC COMPOUNDS (PVOC) (µg/kg)											
Benzene	5.5	**8500**	1100	ND	<180	<25	ND	ND	ND	ND	ND
Ethylbenzene	2900	4600	NE	ND	**2410**	<25	ND	7.4	**4500**	2400	ND
Methyl tert-butyl ether	NE	NE	NE	ND	ND	ND	ND	ND	ND	ND	ND
Toluene	1500	38000	NE	ND	<84	<25	ND	ND	ND	ND	ND
1,2,4-Trimethylbenzene	NE	83000	NE	**880**	10900	61	290	80	33000	20000	ND
1,3,5-Trimethylbenzene	NE	11000	NE	**1300**	<200	<25	280	82	**12000**	7300	9.5
Xylenes, -m, -p	4100	42000	NE	**480**	**6830**	108	ND	34	**19000**	**7600**	ND
Xylenes, -o				ND	**1910**	44	ND	37	**8500**	**3800**	ND
OTHER DETECTED VOLATILE ORGANIC COMPOUNDS (VOC) (µg/kg)											
s-Butylbenzene	NE	NE	NE	ND	4000	<25	ND	ND	ND	ND	ND
n-Butylbenzene	NE	NE	NE	ND	9310	36	ND	ND	ND	ND	ND
Isopropylbenzene	NE	NE	NE	ND	<90	<25	ND	ND	ND	ND	ND
p-Isopropyltoluene	NE	NE	NE	ND	**1870**	<25	ND	ND	ND	ND	ND
Methylene Chloride	NE	NE	NE	ND	3190	743	ND	ND	ND	ND	ND
Napthalene	NE	2700	NE	**900**	**11000**	<25	770	40	**28000**	**22000**	4.0
n-Propylbenzene	NE	NE	NE	ND	<198	<25	ND	ND	ND	ND	ND

Q = Analyte detected above laboratory limit of detection but below limit of quantitation.

Bold indicates analytical results exceed NR 720 RCL

ND=Parameter not detected

SSL = Soil Screening Level

DCL = Direct Contact Level

NA = Parameter not analyzed

NE = NR 720 RCL not established

mg/kg = milligrams per kilogram

µg/kg = micrograms per kilogram

RCL = Residual Contaminant Level

TABLE 1
SUMMARY OF SOIL ANALYTICAL RESULTS
THOMA BULK PLANT
MES PROJECT #12-31002

Sample No.	NR 720 RCL	NR 746 SSL	NR 746 DCL	GP-1		GP-2			GP-3	GP-4	
Sampling Date				2/12/98		2/12/98			2/12/98	2/12/98	
Sample Depth (feet)				3-5	9-11	3-5	5-7	9-11	3-5	3-5	9-11
GASOLINE RANGE ORGANICS (GRO), DIESEL RANGE ORGANICS (DRO) (mg/kg)											
GRO	250	NE	NE	**1900**	<3.3	1400	670	380	890	510	150
DRO	250	NE	NE	**1700**	<8.1	**2700**	530	47	540	710	45
PETROLEUM VOLATILE ORGANIC COMPOUNDS (PVOC) (µg/kg)											
Benzene	5.5	8500	1100	**7100**	140	3800	3500	2300	8000	1300	430
Ethylbenzene	2900	4600	NE	**35000**	<25	**22000**	**9800**	4500	19000	**5100**	1400
Methyl tert-butyl ether	NE	NE	NE	1800	98	910	820	720	750	610	320
Toluene	1500	38000	NE	**2200**	<25	<500	<130	<130	9300	<130	<62
1,2,4-Trimethylbenzene	NE	83000	NE	**110000**	<25	72000	29000	7300	44000	11000	3900
1,3,5-Trimethylbenzene	NE	11000	NE	**36000**	<25	**25000**	10000	4400	**14000**	4500	1700
Xylenes, -m, -p	4100	42000	NE	**110000**	<25	**63000**	**29000**	3800	**59000**	**16000**	1800
Xylenes, -o				**7100**	<25	**4100**	1700	750	**26000**	1400	380
DETECTED POLYNUCLEAR AROMATIC HYDROCARBONS (PAH) (µg/kg)											
Acenaphthene	NE	NE	NE	910	NA	670	NA	NA	NA	NA	NA
Anthracene	NE	NE	NE	210	NA	210	NA	NA	NA	NA	NA
Benzo(a)anthracene	NE	NE	NE	<140	NA	<140	NA	NA	NA	NA	NA
Benzo(a)pyrene	NE	NE	NE	160	NA	<130	NA	NA	NA	NA	NA
Benzo(b)fluoranthene	NE	NE	NE	<160	NA	<160	NA	NA	NA	NA	NA
Benzo(g,h,i)perylene	NE	NE	NE	430	NA	<160	NA	NA	NA	NA	NA
Benzo(k)fluoranthene	NE	NE	NE	200	NA	<150	NA	NA	NA	NA	NA
Chrysene	NE	NE	NE	<150	NA	<150	NA	NA	NA	NA	NA
Fluoranthene	NE	NE	NE	<160	NA	<160	NA	NA	NA	NA	NA
Fluorene	NE	NE	NE	1200	NA	960	NA	NA	NA	NA	NA
Indeno(1,2,3-cd)pyrene	NE	NE	NE	210	NA	<150	NA	NA	NA	NA	NA
1-Methylnaphthalene	NE	NE	NE	10000	NA	8200	NA	NA	NA	NA	NA
2-Methylnaphthalene	NE	NE	NE	16000	NA	13000	NA	NA	NA	NA	NA
Naphthalene	NE	2700	NE	8500	NA	7000	NA	NA	NA	NA	NA
Nitrobenzene-d5	NE	NE	NE	86	NA	99	NA	NA	NA	NA	NA
Phenanthrene	NE	NE	NE	2200	NA	1800	NA	NA	NA	NA	NA
Pyrene	NE	NE	NE	190	NA	160	NA	NA	NA	NA	NA
LEAD (mg/kg)											
Lead	NE	NE	NE	NA	NA	NA	NA	NA	NA	NA	NA

mg/kg = milligrams per kilogram
µg/kg = micrograms per kilogram
RCL = Residual Contaminant Level
SSL = Soil Screening Levels
DCL = Direct-Contact Levels
NA = Parameter not analyzed
NE = NR 720 RCL not established
Q = Analyte detected above laboratory limit of detection but below limit of quantitation.
Bold indicates analytical results exceed NR 720 RCL

midwest engineering services, inc.

TABLE 1
SUMMARY OF SOIL ANALYTICAL RESULTS
THOMA BULK PLANT
MES PROJECT #12-31002

Sample No.	NR 72 RCL	NR 746 SSL	NR 74 DCL	GP-5		GP-6		GP-7		GP-8		GP-9	
Sampling Date				2/12/98		2/12/98		2/12/98		2/12/98		2/12/98	
Sample Depth (feet)				5-7	9-11	5-7	9-11	5-7	7-9	5-7	9-11	5-7	9-11
GASOLINE RANGE ORGANICS (GRO), DIESEL RANGE ORGANICS (DRO) (mg/kg)													
GRO	250	NE	NE	180	6.6	220	24	<2.9	84	**540**	18	**910**	17
DRO	250	NE	NE	72	<3.5	91	33	<4.0	20	82	<3.6	83	<3.6
PETROLEUM VOLATILE ORGANIC COMPOUNDS (PVOC) (µg/kg)													
Benzene	5.5	8500	1100	**51**	<25	<50	<25	<25	<25	<250	<25	<310	45
Ethylbenzene	2900	4600	NE	1300	29	1500	<25	<25	430	2700	110	**10000**	630
Methyl tert-butyl ether	NE	NE	NE	410	54	190	<25	<25	220	950	96	<310	65
Toluene	1500	38000	NE	<40	<25	<50	<25	<25	<25	<250	<25	<310	<25
1,2,4-Trimethylbenzene	NE	83000	NE	3500	<25	3900	120	<25	300	16000	<25	16000	46
1,3,5-Trimethylbenzene	NE	11000	NE	1900	<25	2200	100	<25	570	8200	300	8700	48
Xylenes, -m, -p	4100	42000	NE	1400	<25	**4200**	67	<25	<25	3900	62	**13000**	100
Xylenes, -o				360	<25	**400**	<25	<25	<25	<250	<25	**2600**	<25

mg/kg = milligrams per kilogram

ug/kg = micrograms per kilogram

RCL = Residual Contaminant Level

SSL = Soil Screening Levels

DCL = Direct-Contact Levels

NA = Parameter not analyzed

NE = NR 720 RCL not established

Q = Analyte detected above laboratory limit of detection but below limit of quantitation.

Bold indicates analytical results exceed NR 720 RCL

TABLE 1
SUMMARY OF SOIL ANALYTICAL RESULTS
THOMA BULK PLANT
MES PROJECT #12-31002

Sample No.	NR 72 RCL	NR 74 SSL	NR 74 DCL	GP-10	GP-11		GP-12		B-13	B-14	B-15	
Sampling Date				2/13/98	02/13/1998		02/13/1998		11/28/01	11/28/01	11/28/2001	
Sample Depth (feet)				3-5	3-5	5-7	3-5	5-7	8-10	2-4	2-4	6-8
GASOLINE RANGE ORGANICS (GRO), DIESEL RANGE ORGANICS (DRO) (mg/kg)												
GRO	250	NE	NE	<3.0	<3.2	170	240	70	7.84	<6.38	<6.34	195
DRO	250	NE	NE	<3.9	4.7	71	220	920	<6.24	**413**	**382**	**2550**
PETROLEUM VOLATILE ORGANIC COMPOUNDS (PVOC) (µg/kg)												
Benzene	5.5	8500	1100	<25	<25	<50	<62	<50	<25	<25	<25	<100
Ethylbenzene	2900	4600	NE	<25	<25	1000	610	500	<25	<25	<25	805
Methyl tert-butyl ether	NE	NE	NE	<25	<25	120	<62	<50	<25	<25	<25	<100
Toluene	1500	38000	NE	<25	<25	<50	<62	<50	<25	<25	<25	318
1,2,4-Trimethylbenzene	NE	83000	NE	<25	<25	1200	1400	1600	<25	<25	<25	3450
1,3,5-Trimethylbenzene	NE	11000	NE	<25	<25	620	2100	1000	<25	<25	<25	2560
Xylenes, -m, -p	4100	42000	NE	<25	<25	1200	600	360	<25	<25	<25	1050
Xylenes, -o				<25	<25	<50	180	<50	<25	<25	<25	<100
OTHER DETECTED VOLATILE ORGANIC COMPOUNDS (VOC) (µg/kg)												
Napthalene	NE	2700	NE	<25	<25	NA	NA	NA	<25	<25	<25	395

mg/kg = milligrams per kilogram

µg/kg = micrograms per kilogram

RCL = Residual Contaminant Level

SSL = Soil Screening Level

DCL = Direct Contact Level

NA = Parameter not analyzed

NE = NR 720 RCL not established

Q = Analyte detected above laboratory limit of detection but below limit of quantitation.

Bold indicates analytical results exceed NR 720 RCL

TABLE 1
SOIL ANALYTICAL RESULTS
THOMA BULK PLANT
MES PROJECT #12-31002

Sample No.	NR 72 RCL	NR 74 SSL	NR 74 DCL	B-16		B-17		B-18		B-19		B-20	B-21
Sampling Date				11/28/2001		11/28/2001		11/28/2001		11/28/2001		11/28/01	11/28/01
Sample Depth (feet)				2-4	10-12	2-4	10-12	2-4	10-12	2-4	10-12	6-8	4-6
GASOLINE RANGE ORGANICS (GRO), DIESEL RANGE ORGANICS (DRO) (mg/kg)													
GRO	250	NE	NE	**381**	**265**	**1210**	13.6	698	30.1	334	24.3	194	192
DRO	250	NE	NE	**2870**	**969**	**1840**	<6.26	2120	74.7	377	175	331	180
PETROLEUM VOLATILE ORGANIC COMPOUNDS (PVOC) (µg/kg)													
Benzene	5.5	8500	1100	**37.2**	<200	<1000	**493**	**925**	372	**1120**	**330**	<1000	<100
Ethylbenzene	2900	4600	NE	1250	1260	**5240**	380	644	712	6410	419	2380	2390
Methyl tert-butyl ether	NE	NE	NE	<25	<200	<1000	<25	<200	<25	<200	255	<1000	<100
Toluene	1500	38000	NE	251	<200	**6150**	65	**1660**	121	**2960**	70.5	<1000	890
1,2,4-Trimethylbenzene	NE	83000	NE	10000	6870	34800	<25	23800	1990	21000	499	8550	8080
1,3,5-Trimethylbenzene	NE	11000	NE	**5760**	**3840**	**24100**	80.1	10800	770	6700	515	2920	3390
Xylenes, -m, -p	4100	42000	NE	**2490**	**2630**	**25300**	<25	**16600**	1240	**19100**	155	**8350**	4310
Xylenes, -o				<25	<200	**14500**	<25	<200	50.7	1270	40.2	<1000	<100
OTHER DETECTED VOLATILE ORGANIC COMPOUNDS (VOC) (µg/kg)													
Napthalene	NE	2700	NE	**6930**	**6280**	**4450**	<25	**9640**	812	**5780**	610	2580	2220
LEAD (mg/kg)													
Lead	NE	NE	NE	**7.57**	NA	12.0	NA	7.68	NA	NA	NA	NA	NA

mg/kg = milligrams per kilogram

µg/kg = micrograms per kilogram

RCL = Residual Contaminant Level

SSL = Soil Screening Level

DCL = Direct Contact Level

NA = Parameter not analyzed

NE = NR 720 RCL not established

Q = Analyte detected above laboratory limit of detection but below limit of quantitation.

Bold indicates analytical results exceed NR 720 RCL

TABLE 1
SUMMARY OF SOIL ANALYTICAL RESULTS
THOMA BULK PLANT
MES PROJECT #12-31002

Sample No.	NR 720 RCL	NR 746 SSL	NR 746 DCL	B-22	B-23		B-24		B-25		B-26		B-27	B-28	B-29
Sampling Date				11/28/01	11/28/01		11/28/01		11/28/01		11/28/01		11/28/01	11/28/01	11/28/01
Sample Depth (feet)				4-6	4-6	12-14	2-4	6-8	2-4	10-12	0-2	4-6	2-4	6-8	2-4
GASOLINE RANGE ORGANICS (GRO), DIESEL RANGE ORGANICS (DRO) (mg/kg)															
GRO	250	NE	NE	**545**	**905**	<6.06	**358**	**426**	<6.31	12.1	**3530**	**1420**	<6.63	**285**	**793**
DRO	250	NE	NE	**2730**	**7130**	49.6	**4560**	**2830**	12.5	73.6	**32000**	**2210**	111	132	**2960**
PETROLEUM VOLATILE ORGANIC COMPOUNDS (PVOC) (µg/kg)															
Benzene	5.5	8500	1100	<400	<400	<25	<200	<200	**39.9**	**61.3**	**17900**	**9170**	<25	<200	**3070**
Ethylbenzene	2900	4600	NE	**2340**	<400	32.6	375	958	130	104	**106000**	**39700**	<25	**2980**	1540
Methyl tert-butyl ether	NE	NE	NE	<400	<400	<25	<200	<200	<25	<25	<1000	<400	<25	<200	<1000
Toluene	1500	38000	NE	<400	576	<25	<200	<200	112	37.3	**7930**	**73000**	39.1	1150	1490
1,2,4-Trimethylbenzene	NE	83000	NE	11600	17500	118	8560	10800	315	342	**358000**	**102000**	50	9410	4480
1,3,5-Trimethylbenzene	NE	11000	NE	7160	**12500**	<25	3820	6360	134	122	**105000**	**33200**	<25	5200	1650
Xylenes, -m, -p	4100	4200	NE	**4390**	3660	133	1670	1920	547	262	**369000**	**121000**	55.2	**6020**	**5010**
Xylenes, -o				<400	<400	48	933	<200	80.8	68.2	**48100**	**52700**	<25	<200	<1000
OTHER DETECTED VOLATILE ORGANIC COMPOUNDS (VOC) (µg/kg)															
Napthalene	NE	2700	NE	**9760**	**18300**	70.4	**8150**	**11800**	36.7	117	**114000**	**26000**	65.5	1180	1460

mg/kg = milligrams per kilogram

µg/kg = micrograms per kilogram

RCL = Residual Contaminant Level

SSL = Soil Screening Level

DCL = Direct Contact Level

NA = Parameter not analyzed

NE = NR 720 RCL not established

Q = Analyte detected above laboratory limit of detection but below limit of quantitation.

Bold indicates analytical results exceed NR 720 RCL

TABLE 1
SUMMARY OF SOIL ANALYTICAL RESULTS
THOMA BULK PLANT
MES PROJECT #12-31002

Sample No.	NR 720 RCL	NR 746 SSL	NR 746 DCL	B-30	B-31	B-32	B-33	B-34	B-35		B-37
Sampling Date				2/19/02	2/19/02	2/19/02	2/19/02	2/19/02	2/20/02		2/20/02
Sample Depth (feet)				7.5-9.5	10-12	10-12	7-9	9-11	8-10	10-12	8-10
GASOLINE RANGE ORGANICS (GRO), DIESEL RANGE ORGANICS (DRO) (mg/kg)											
GRO	250	NE	NE	55.4	34.9	<5.60	195	323	<6.04	51.1	**695**
DRO	250	NE	NE	**546**	14.2	<5.60	531	**2570**	6.52	18	**388**
PETROLEUM VOLATILE ORGANIC COMPOUNDS (PVOC) (µg/kg)											
Benzene	5.5	8500	1100	**197**	**123**	<25	<100	<200	<25	**48.1**	**9040**
Ethylbenzene	2900	4600	NE	715	183	<25	824	1230	<25	412	**19200**
Methyl tert-butyl ether	NE	NE	NE	<100	<25	<25	<100	<200	<25	<25	<400
Toluene	1500	38000	NE	202	53.7	<25	347	<200	<25	<25	**31500**
1,2,4-Trimethylbenzene	NE	83000	NE	**2110**	479	<25	3020	2250	<25	938	46200
1,3,5-Trimethylbenzene	NE	11000	NE	**925**	276	<25	1560	2190	<25	992	**15500**
Xylenes, -m, -p	4100	**42000**	NE	1580	794	<25	569	<200	<25	91.1	**59900**
Xylenes, -o				<100	42.7	<25	<100	<200	<25	<25	**25600**
OTHER DETECTED VOLATILE ORGANIC COMPOUNDS (VOC) (µg/kg)											
Napthalene	NE	2700	NE	1350	718	<25	**3490**	<200	<25	<25	**10500**

mg/kg = milligrams per kilogram

µg/kg = micrograms per kilogram

RCL = Residual Contaminant Level

SSL = Soil Screening Level

DCL = Direct Contact Level

NA = Parameter not analyzed

NE = NR 720 RCL not established

Q = Analyte detected above laboratory limit of detection but below limit of quantitation.

Bold indicates analytical results exceed NR 720 RCL

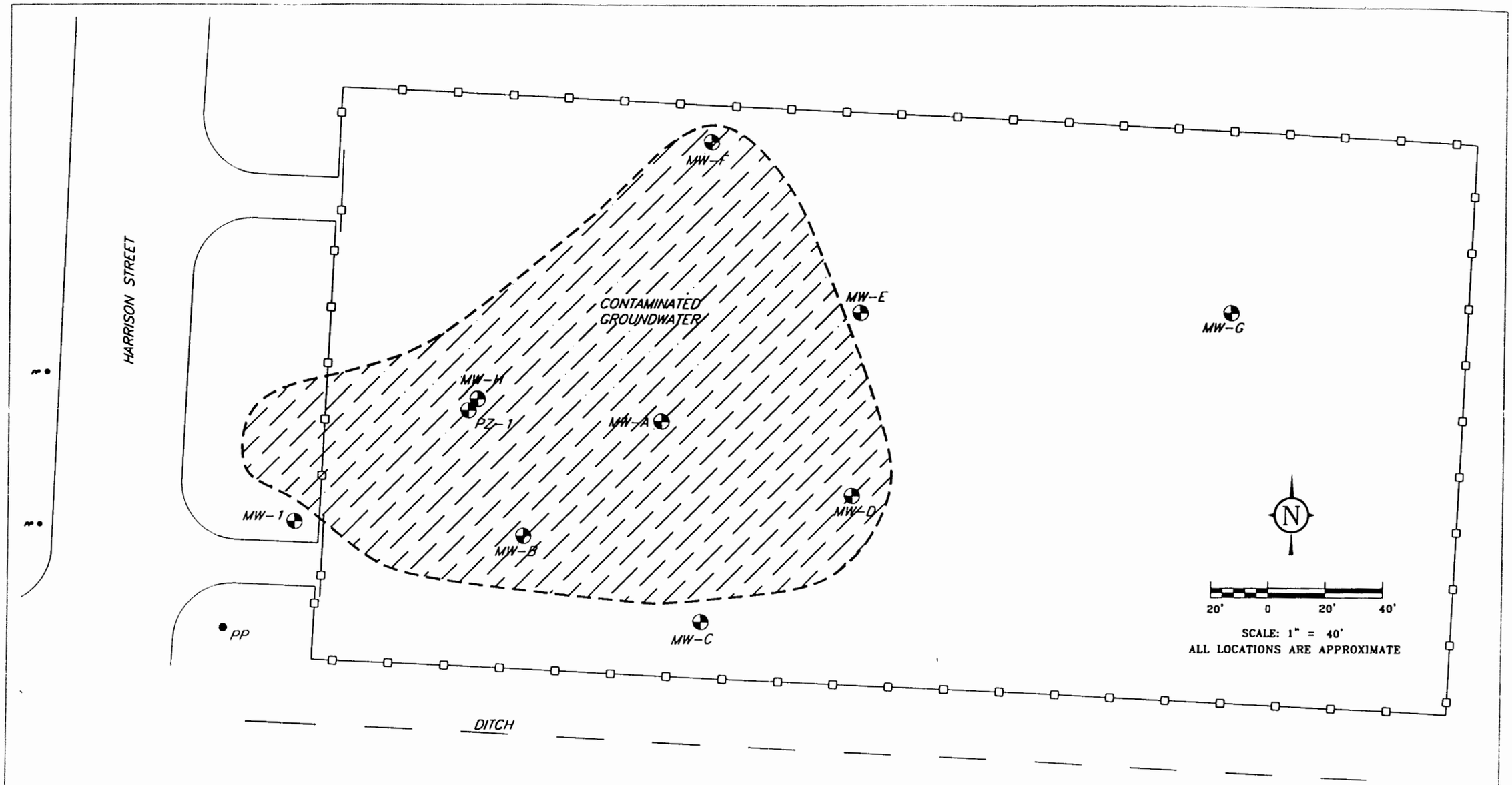

FIGURE 4: ESTIMATED EXTENT OF GROUNDWATER CONTAMINATION EXCEEDING THE NR 140 ES

MES
MIDWEST ENGINEERING SERVICES
104 W. JACKSON ST., RIPON, WI 54971
TEL: (920) 745-2200 FAX: (920) 745-2222

12-31002
DRAWN BY: KP
DATE: 10/11/04
ID#: PLOT3

THOMA BULK PLANT
OSHKOSH, WISCONSIN
GIS REGISTRATION PACKAGE

TABLE 3
WATER LEVEL DATA
THOMA OIL BULK PLANT
MES PROJECT NO. 12-31002

Monitoring Well Number	Top of Well Casing Elevation	Date Measured	Depth to Water (Ft.)	Groundwater Elevation (Ft.)
MW-1	99.46	3/20/02	3.56	95.90
		6/25/02	3.37	96.09
		9/11/02	4.51	94.95
		12/13/02	5.51	93.95
		5/22/03	3.03	96.43
MW-A	101.40	3/20/02	3.50	97.90
		6/25/02	3.77	97.63
		9/11/02	5.59	95.81
		12/13/02	7.24	94.16
		5/22/03	4.93	96.47
MW-B	101.22	3/20/02	5.07	96.15
		6/25/02	4.89	96.33
		9/11/02	5.71	95.51
		12/13/02	6.95	94.27
		5/22/03	5.17	96.05
MW-C	99.21	3/20/02	4.09	95.12
		6/25/02	5.66	93.55
		9/11/02	NA	NA
		12/13/02	NA	NA
		5/22/03	3.85	95.36
MW-D	102.63	3/20/02	6.36	96.27
		6/25/02	6.61	96.02
		9/11/02	7.21	95.42
		12/13/02	8.10	94.53
		5/22/03	6.40	96.23
MW-E	102.55	3/20/02	4.21	98.34
		6/25/02	5.18	97.37
		9/11/02	8.98	93.57
		12/13/02	7.65	94.90
		5/22/03	5.62	96.93
MW-F	102.8	3/20/02	3.61	99.19
		6/25/02	4.50	98.30
		9/11/02	8.93	93.87
		12/13/02	7.68	95.12
		5/22/03	5.31	97.49
MW-G	103.99	3/20/02	7.27	96.72
		6/25/02	7.49	96.50
		9/11/02	7.83	96.16
		12/13/02	6.01	97.98
		5/22/03	7.08	96.91
MW-H	102.66	3/20/02	5.17	97.49
		6/25/02	4.90	97.76
		9/11/02	7.40	95.26
		12/13/02	8.20	94.46
		5/22/03	6.39	96.27

ft = feet
NR=Not recorded
Elevations in feet in reference to benchmark with an assumed elevation of 100 feet.

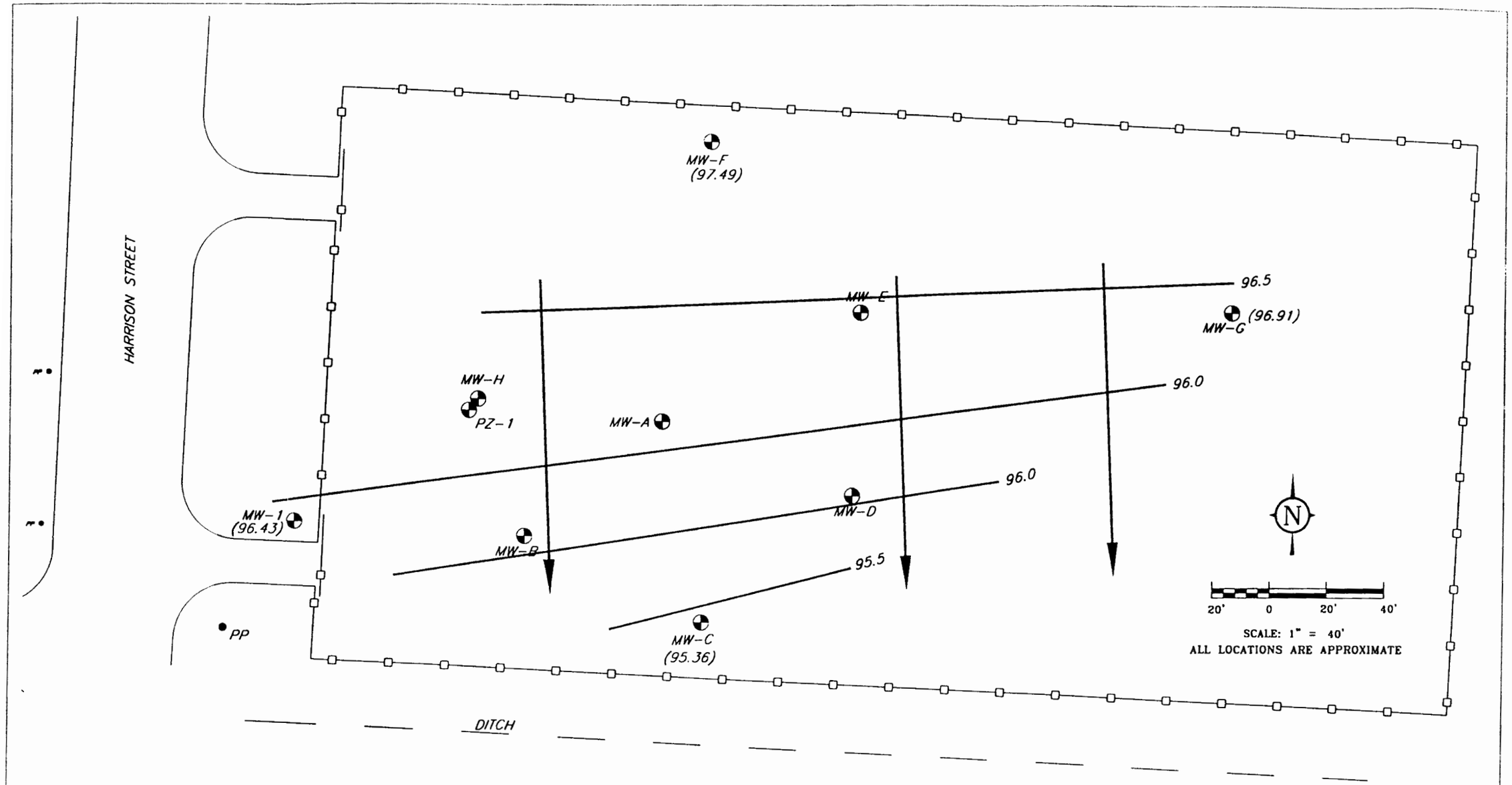

FIGURE 5: GROUNDWATER ELEVATION CONTOUR AND FLOW DIRECTION MAP - MAY 22, 2003

MES
MIDWEST ENGINEERING SERVICES
104 W. JACKSON ST., RIPON, WI 54971
TEL: (920) 745-2200 FAX: (920) 745-2222

12-31002
DRAWN BY: KP
DATE: 10/11/04
ID#: PLOT3

THOMA BULK PLANT
OSHKOSH, WISCONSIN
GIS REGISTRATION PACKAGE

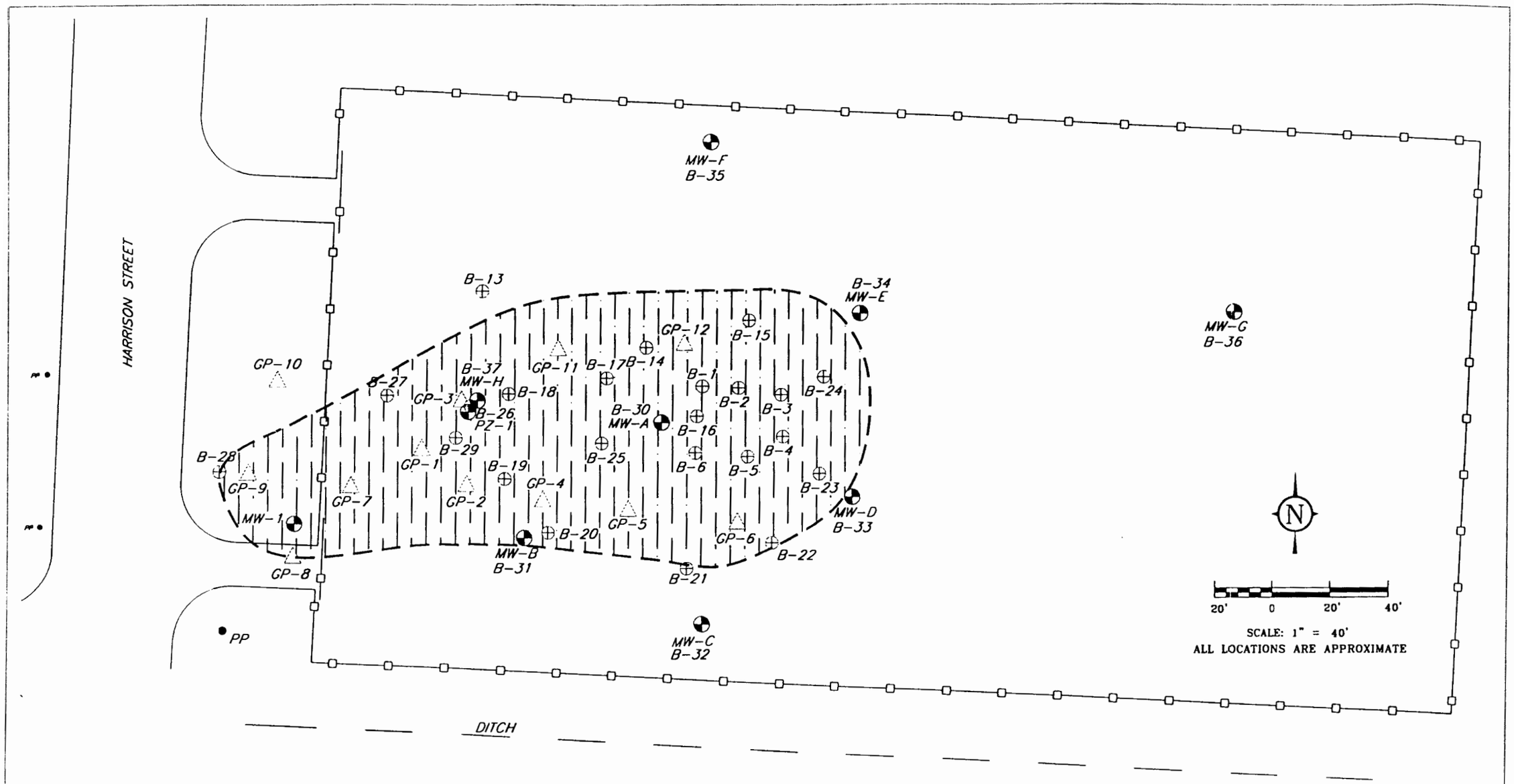

FIGURE 6: ESTIMATED EXTENT OF SOIL CONTAMINATION EXCEEDING THE NR 720 RCL

MES
MIDWEST ENGINEERING SERVICES
104 W. JACKSON ST., RIPON, WI 54971
TEL: (920) 745-2200 FAX: (920) 745-2222

12-31002
DRAWN BY: XP
DATE: 10/11/04
ID#: PLOT3

THOMA BULK PLANT
OSHKOSH, WISCONSIN
GIS REGISTRATION PACKAGE

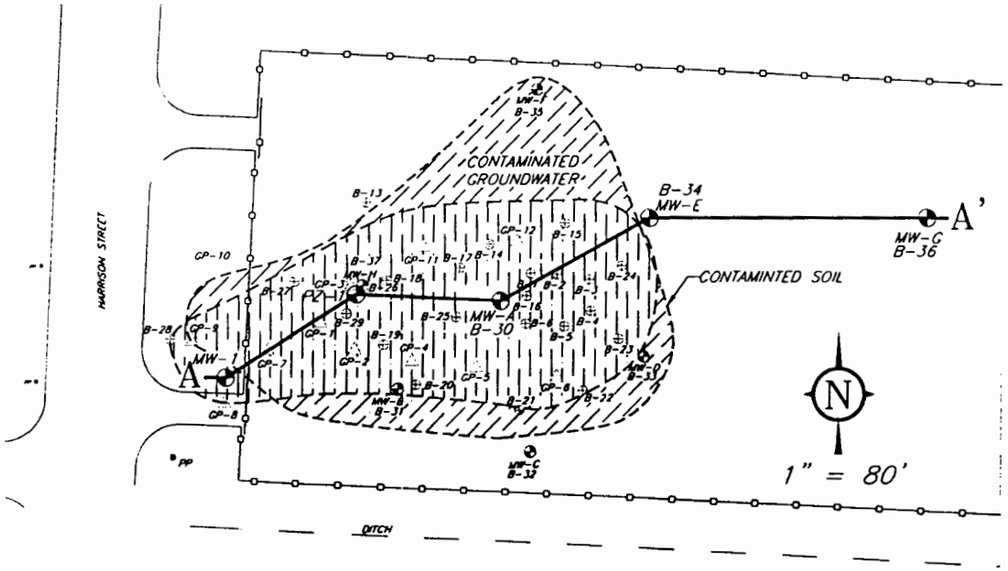

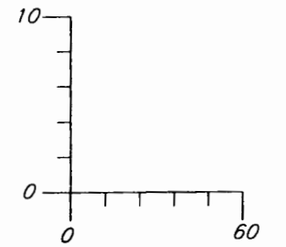

SCALE
HORIZONTAL: 1" = 60'
VERTICAL: 1" = 1'

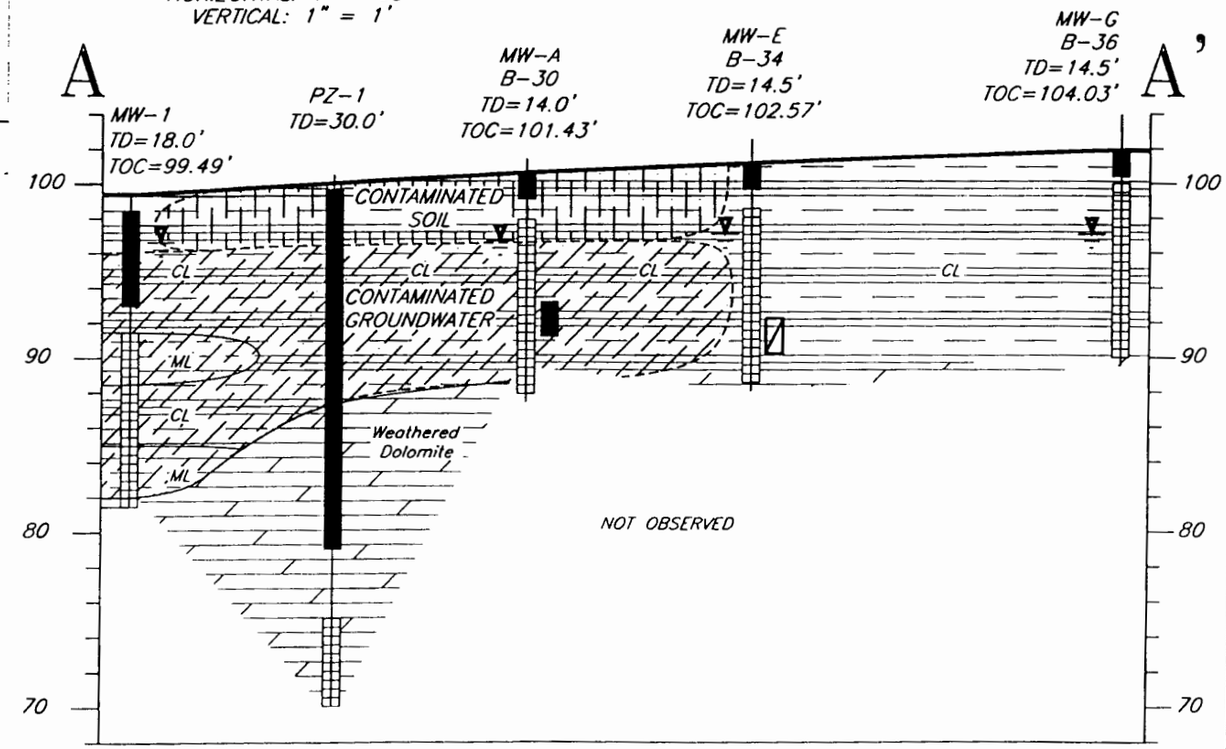

EXPLANATION	
SOILS CLASSIFICATION	**MONITORING WELL**
ASPHALT — See bore logs; See bore logs	Bentonite Seal
DOLOMITE — See bore logs	Groundwater Elevations 5/22/03
CL — Inorganic clays of low to medium plasticity, gravelly clays, sandy clays, silty clays, lean clays.	Soil Sample exceeding NR 720
ML — Inorganic silts, and very fine sands, rock flour, silty or clayey fine sand or clayey silts with slight plasticity.	Soil Sample Location
	Well Screen

FIGURE 7: GEOLOGIC CROSS SECTION A-A'

MES
MIDWEST ENGINEERING SERVICES
104 W. JACKSON ST., RIPON, WI 54971
TEL: (920) 745-2200 FAX: (920) 745-2222

12-31002
DRAWN BY KP
DATE: 10/13/04
ID#: PLOT3

THOMA BULK PLANT
OSHKOSH, WISCONSIN
GIS REGISTRATION PACKAGE

midwest engineering services, inc.

geotechnical • environmental • materials engineers

104 W Jackson St.
Ripon, WI 54971-1314
920-745-2200
FAX 920-745-2222
www.midwesteng.com

October 7, 2004

Mr. Paul Thoma
Thoma Oil Company, Inc.
P.O. Box 2233
Oshkosh, WI 54903

SUBJECT: **GIS REGISTRY**
Thoma Bulk Plant
2404 Harrison Street
Oshkosh, Wisconsin
MES Project No. 12-31002-1
BRRTS # 03-71-001292
PECFA Claim No. 54901-1604-04

Dear Mr. Thoma:

Midwest Engineering is currently acquiring the necessary information to complete the Geographical Information System (GIS) package. The WDNR requires a statement signed by the Responsible Party certifying that the legal descriptions contained on the deed are correct. Therefore, please review the legal description on the attached deed and if the information appears correct, please sign the attached statement and return it to MES utilizing the attached envelope.

If you have any questions, or wish to discuss any part of this correspondence, please feel free to contact MES at (920) 745-2200.

Respectfully Submitted,

MIDWEST ENGINEERING SERVICES, INC.

Brian Youngwirth
Hydrogeologist

I hereby certify that the legal descriptions in the GIS registration package are complete and accurate.

Mr Paul Thoma

Paul Thoma

CERTIFIED MAIL

October 14, 2004

Mr. Steve and Darrell Thoma
1219 Algoma Blvd.
Oshkosh, WI 54901

RE: SITE NOTICE OF GROUNDWATER CONTAMINATION
THOMA OIL BULK PLANT
2404 Harrison Street
Oshkosh, Wisconsin
BRRTS No. 02-71-000464
MES Project No. 12-31002

Dear Mr. Thoma:

Groundwater contamination that originated at the above-mentioned property currently contains petroleum volatile organic compounds (PVOCs) at concentrations exceeding the state enforcement standards found in chapter NR 140, Wisconsin Administrative Code. However, it appears this contaminant plume is stable or receding and will naturally degrade over time. MES believes that paving the west half of the site and allowing natural attenuation to complete the cleanup at this site will meet the requirements for case closure that are found in chapter NR 726 or chapter NR 746. Further, this site appears eligible for closure under ch. NR 746 Wisconsin Administrative Code. I have requested that the Department of Natural Resources review this site for case closure. Closure means that the Department will not be requiring any further investigation or cleanup action to be taken, other than the reliance on natural attenuation.

Since the source of the groundwater contamination is the responsibility of the former property owner, Mr. Paul Thoma, neither you nor any subsequent owner of your property will be held responsible for investigation or cleanup of this groundwater contamination, as long as you and any subsequent owners comply with the requirements of section 292.13, Wisconsin Statutes, including allowing access to your property for environmental investigation or cleanup if access is required. For further information on the requirements of section 292.13, Wisconsin Statutes, you may call 1-800-367-6076 for calls originating in Wisconsin, or 608-264-6020 if you are calling from out of state or within the Madison area, to obtain a copy of the Department of Natural Resources' publication #RR—589, Fact Sheet 10: Guidance for Dealing with Properties Affected by Off—Site Contamination."

The Department of Natural Resources recently established an alternative mechanism for closing sites where groundwater contamination remains at levels above the NR 140 enforcement standards. The alternative closure mechanism, listing the property on the geographical information system database, does not require recording a deed modification at the register of deeds.

All properties within the site boundaries where groundwater contamination exceeds chapter NR 140 enforcement standards will be listed on the Department of Natural Resources geographic information

SITE NOTICE OF GROUNDWATER CONTAMINATION
Thoma Oil Bulk Plant
2404 Harrison Street
Oshkosh, WI
WDNR BRRTS No. 02-71-000464

system (GIS) Registry of Closed Remediation Sites. The information on the GIS Registry includes maps showing the location of properties in Wisconsin where groundwater contamination above chapter NR 140 enforcement standards was found at the time that the case was closed. This GIS Registry is available to the public on the Department of Natural Resource internet web site.

As an affected property owner, you have a right to contact the Department of Natural Resources within 30 days to provide any technical information that you may have that indicates that closure should not be granted for this site. If you would like to submit any information to the Department of Natural Resources that is relevant to this closure request, you should mail that information to: Mr. Kevin McKnight, Wisconsin Department of Natural Resources, 625 E. County Road Y, Oshkosh, WI 54901.

Should you or any subsequent property owner wish to construct or reconstruct a well on your property, special well construction standards may be necessary to protect the well from the residual groundwater contamination. Any well driller who proposes to construct a well on your property in the future will first need to call the Diggers Hotline (I-800-242-8511) if your property is located outside of the service area of a municipally owned water system, or contact the Drinking Water program within the Department of Natural Resources if your property is located within the designated service area of a municipally owned water system, to determine if there is a need for special well construction standards.

You may access the DNR GIS Registry of Closed Remediation Sites on the internet at http://gomapout.dnr.state.wi.us/org/at/et/geo/gwur/index.htm.

If you need more information, you may contact Midwest Engineering Services at at (920) 745-2200 or Mr. Kevin McKnight with the WDNR at (920) 424-7890.

Sincerely Yours,

Paul Thoma

Paul Thoma

R + R - OSH
RECEIVED
JUL 18 2006
TRACKED ☐
REVIEWED ☐

CERTIFIED MAIL

July 17, 2006

Mr. Scott Erickson
City of Oshkosh
P.O. Box 1130
Oshkosh, WI 54903-1130

RE: OFF SITE NOTICE OF GROUNDWATER CONTAMINATION WITHIN RIGHT OF WAY
Thoma Bulk Plant
2404 Harrison Street
Oshkosh, WI
MES Project No. 12-31002
WDNR BRRTS No. 02-71-001292

Dear Mr. Erickson:

Groundwater contamination that appears to have originated on the property located at 2404 Harrison Street has migrated onto the City of Oshkosh Right of Way west of the site (Harrison Street). The levels of petroleum compounds within soil and groundwater are above the state enforcement standards found in chapter NR 140, and NR 720, Wisconsin Administrative Code. This site appears eligible for closure under ch. NR 746 Wisconsin Administrative Code. I have requested that the Department of Natural Resources close the site with natural attenuation as the final remedy for this site, and submittal of a Cap Maintenance Plan due to soil contamination at the subject site (2404 Harrison Street) in excess of the NR 746 Table 1 values. Closure means that the Department will not be requiring any further investigation or cleanup action to be taken, other than the reliance on natural attenuation and execution of the terms of the Cap Maintenance Plan.

Since the source of the groundwater contamination is not on your property, neither you nor any subsequent owner of your property will be held responsible for investigation or cleanup of this groundwater contamination, as long as you and any subsequent owners comply with the requirements of section 292.13, Wisconsin Statutes, including allowing access to your property for environmental investigation or cleanup if access is required. For further information on the requirements of section 292.13, Wisconsin Statutes, you may call 1-800-367-6076 for calls originating in Wisconsin, or 608-264-6020 if you are calling from out of state or within the Madison area, to obtain a copy of the Department of Natural Resources' publication #RR—589, Fact Sheet 10: Guidance for Dealing with Properties Affected by Off—Site Contamination."

The Department of Natural Resources recently established an alternative mechanism for closing sites where groundwater contamination remains at levels above the NR 140 enforcement standards. The alternative closure mechanism of listing the property on the geographical information system database, does not require recording a deed modification at the register of deeds.

All properties within the site boundaries where groundwater contamination exceeds chapter NR 140 enforcement standards will be listed on the Department of Natural Resources geographic information

OFF SITE NOTICE OF GROUNDWATER CONTAMINATION
Thoma Bulk Plant
2404 Harrison Street
Oshkosh, WI
WDNR BRRTS No. 02-71-000404

system (GIS) Registry of Closed Remediation Sites. The information on the GIS Registry includes maps showing the location of properties in Wisconsin where groundwater contamination above chapter NR 140 enforcement standards was found at the time that the case was closed. This GIS Registry is available to the public on the Department of Natural Resource internet web site.

You may access the DNR GIS Registry of Closed Remediation Sites on the internet at http://gomapout.dnr.state.wi.us/org/at/et/geo/gwur/index.htm.

If you need more information, you may contact Ms. Casey Jones with the WDNR at (920) 303-5424.

Sincerely Yours,

Paul Thoma

Mr. Paul Thoma