GIS REGISTRY
Cover Sheet

May, 2009
(RR 5367)

Source Property Information

CLOSURE DATE: Oct 5, 2009

BRRTS #: **02-43-543304**

FID #:

ACTIVITY NAME: Gillett Cement Products - Maint Bldg

DATCP #:

PROPERTY ADDRESS: 6120 STH 32

COMM #:

MUNICIPALITY: Gillett

PARCEL ID #: 016-151502333C

***WTM COORDINATES:**

X: **653691** Y: **493011**

** Coordinates are in WTM83, NAD83 (1991)*

WTM COORDINATES REPRESENT:

- (●) Approximate Center Of Contaminant Source
- ( ) Approximate Source Parcel Center

Please check as appropriate: (BRRTS Action Code)

Contaminated Media:

- [x] Groundwater Contamination > ES *(236)*
  - [ ] Contamination in ROW
  - [ ] Off-Source Contamination

  *(**note:** for list of off-source properties see "Impacted Off-Source Property")*

- [ ] Soil Contamination > *RCL or **SSRCL *(232)*
  - [ ] Contamination in ROW
  - [ ] Off-Source Contamination

  *(**note:** for list of off-source properties see "Impacted Off-Source Property")*

Land Use Controls:

- [x] N/A (*Not Applicable*)
- [ ] Soil: maintain industrial zoning *(220)*

  *(**note:** soil contamination concentrations between non-industrial and industrial levels)*
- [ ] Structural Impediment *(224)*
- [ ] Site Specific Condition *(228)*
- [ ] Cover or Barrier *(222)*

  *(**note:** maintenance plan for groundwater or direct contact)*
- [ ] Vapor Mitigation *(226)*
- [ ] Maintain Liability Exemption *(230)*

  *(**note:** local government or economic development corporation)*

Monitoring Wells:

Are all monitoring wells properly abandoned per NR 141? *(234)*

( ) Yes ( ) No (●) N/A

** Residual Contaminant Level*
***Site Specific Residual Contaminant Level*

GIS Registry Checklist

This Adobe Fillable form is intended to provide a list of information that is required for evaluation for case closure. It is to be used in conjunction with Form 4400-202, Case Closure Request. The closure of a case means that the Department has determined that no further response is required at that time based on the information that has been submitted to the Department.

NOTICE: Completion of this form is mandatory for applications for case closure pursuant to ch. 292, Wis. Stats. and ch. NR 726, Wis. Adm. Code, including cases closed under ch. NR 746 and ch. NR 726. The Department will not consider, or act upon your application, unless all applicable sections are completed on this form and the closure fee and any other applicable fees, required under ch. NR 749, Wis. Adm. Code, Table 1 are included. It is not the Department's intention to use any personally identifiable information from this form for any purpose other than reviewing closure requests and determining the need for additional response action. The Department may provide this information to requesters as required by Wisconsin's Open Records law [ss. 19.31 - 19.39, Wis. Stats.].

BRRTS #: 02-43-543304 PARCEL ID #: 016-151502333C

ACTIVITY NAME: Gillett Cement Products - Maint Bldg WTM COORDINATES: X: 653691 Y: 493011

CLOSURE DOCUMENTS (the Department adds these items to the final GIS packet for posting on the Registry)

- [x] **Closure Letter**
- [ ] **Maintenance Plan** (*if activity is closed with a land use limitation or condition (land use control) under s. 292.12, Wis. Stats.*)
- [x] **Conditional Closure Letter**
- [ ] **Certificate of Completion (COC)** for VPLE sites

SOURCE LEGAL DOCUMENTS

- [x] **Deed:** The most recent deed as well as legal descriptions, for the **Source Property** (where the contamination originated). Deeds for other, off-source (off-site) properties are located in the **Notification** section.
  Note: *If a property has been purchased with a land contract and the purchaser has not yet received a deed, a copy of the land contract which includes the legal description shall be submitted instead of the most recent deed. If the property has been inherited, written documentation of the property transfer should be submitted along with the most recent deed.*
- [x] **Certified Survey Map:** A copy of the certified survey map or the relevant section of the recorded plat map *for those properties where the legal description in the most recent deed refers to a certified survey map or a recorded plat map.* (lots on subdivided or platted property (e.g. lot 2 of xyz subdivision)).

  Figure #: **Title: Plat of Survey**
- [x] **Signed Statement:** A statement signed by the Responsible Party (RP), which states that he or she believes that the attached legal description accurately describes the correct contaminated property.

MAPS (meeting the visual aid requirements of s. NR 716.15(2)(h))

Maps must be no larger than 8.5 x 14 inches unless the map is submitted electronically.

- [x] **Location Map:** A map outlining all properties within the contaminated site boundaries on a U.S.G.S. topographic map or plat map in sufficient detail to permit easy location of all parcels. If groundwater standards are exceeded, include the location of all potable wells within 1200 feet of the site.
  Note: *Due to security reasons municipal wells are not identified on GIS Packet maps. However, the locations of these municipal wells must be identified on Case Closure Request maps.*

  Figure #: 1 **Title: Site Location Map**
- [x] **Detailed Site Map:** A map that shows all relevant features (buildings, roads, individual property boundaries, contaminant sources, utility lines, monitoring wells and potable wells) within the contaminated area. This map is to show the location of all contaminated public streets, and highway and railroad rights-of-way in relation to the source property and in relation to the boundaries of groundwater contamination exceeding a ch. NR 140 Enforcement Standard (ES), and/or in relation to the boundaries of soil contamination exceeding a Residual Contaminant Level (RCL) or a Site Specific Residual Contaminant Levels (SSRCL) as determined under s. NR 720.09, 720.11 and 720.19.

  Figure #: 2 **Title: Site Map**
- [ ] **Soil Contamination Contour Map:** For sites closing with residual soil contamination, <u>this map is to show the location of all contaminated soil and a single contour</u> showing the horizontal extent of each area of contiguous residual soil contamination that exceeds a Residual Contaminant Level (RCL) or a Site Specific Residual Contaminant Level (SSRCL)as determined under s. NR 720.09, 720.11 and 720.19.

  Figure #: **Title:**

BRRTS #: 02-43-543304 ACTIVITY NAME: Gillett Cement Products - Maint Bldg

MAPS (continued)

☒ **Geologic Cross-Section Map:** A map showing the source location and vertical extent of residual soil contamination exceeding a Residual Contaminant Level (RCL) or a Site Specific Residual Contaminant Level (SSRCL). If groundwater contamination exceeds a ch. NR 140 Enforcement Standard (ES) when closure is requested, show the source location and vertical extent, water table and piezometric elevations, and locations and elevations of geologic units, bedrock and confining units, if any.

Figure #: 3 **Title: Groundwater Isoconcentration Cross-section**

Figure #: **Title:**

☒ **Groundwater Isoconcentration Map:** For sites closing with residual groundwater contamination, this map shows the horizontal extent of all groundwater contamination exceeding a ch. NR140 Preventive Action Limit (PAL) and an Enforcement Standard (ES). Indicate the direction and date of groundwater flow, based on the most recent sampling data.
Note: *This is intended to show the total area of contaminated groundwater.*

Figure #: 8 **Title: PCE Iso concentration Map**

☒ **Groundwater Flow Direction Map:** A map that represents groundwater movement at the site. If the flow direction varies by more then 20° over the history of the site, submit 2 groundwater flow maps showing the maximum variation in flow direction.

Figure #: 9 **Title: Groundwater Flow Direction Drawing**

Figure #: **Title:**

TABLES (meeting the requirements of s. NR 716.15(2)(h)(3))

Tables must be no larger than 8.5 x 14 inches unless the table is submitted electronically. Tables must not contain shading and/or cross-hatching. The use of **BOLD** or *ITALICS* is acceptable.

☒ **Soil Analytical Table:** A table showing remaining soil contamination with analytical results and collection dates.
Note: This is one table of results for the contaminants of concern. Contaminants of concern are those that were found during the site investigation, that remain after remediation. It may be necessary to create a new table to meet this requirement.

Table #: 2 **Title: Post Remediation Soil Analytical Results**

☒ **Groundwater Analytical Table:** Table(s) that show the most recent analytical results and collection dates, for all monitoring wells and any potable wells for which samples have been collected.

Table #: 3 **Title: Summary of Groundwater Analytical Results**

☒ **Water Level Elevations:** Table(s) that show the previous four (at minimum) water level elevation measurements/dates from all monitoring wells. If present, free product is to be noted on the table.

Table #: 4 **Title: Groundwater Elevations**

IMPROPERLY ABANDONED MONITORING WELLS

For each monitoring well not properly abandoned according to requirements of s. NR 141.25 include the following documents.
Note: *If the site is being listed on the GIS Registry for only an improperly abandoned monitoring well you will only need to submit the documents in this section for the GIS Registry Packet.*

☒ **Not Applicable**

☐ **Site Location Map:** A map showing all surveyed monitoring wells with specific identification of the monitoring wells which have not been properly abandoned.
Note: *If the applicable monitoring wells are distinctly identified on the Detailed Site Map this Site Location Map is not needed.*

Figure #: **Title:**

☐ **Well Construction Report:** Form 4440-113A for the applicable monitoring wells.

☐ **Deed:** The most recent deed as well as legal descriptions for each property where a monitoring well was not properly abandoned.

☐ **Notification Letter:** Copy of the notification letter to the affected property owner(s).

BRRTS #: 02-43-543304 ACTIVITY NAME: Gillett Cement Products - Maint Bldg

NOTIFICATIONS

Source Property

☐ **Letter To Current Source Property Owner:** If the source property is owned by someone other than the person who is applying for case closure, include a copy of the letter notifying the current owner of the source property that case closure has been requested.

☐ **Return Receipt/Signature Confirmation:** Written proof of date on which confirmation was received for notifying current source property owner.

Off-Source Property

Group the following information per individual property and label each group according to alphabetic listing on the "Impacted Off-Source Property" attachment.

☐ **Letter To "Off-Source" Property Owners:** Copies of all letters sent by the Responsible Party (RP) to owners of properties with groundwater exceeding an Enforcement Standard (ES), and to owners of properties that will be affected by a land use control under s. 292.12, Wis. Stats.
Note: *Letters sent to off-source properties regarding residual contamination must contain standard provisions in Appendix A of ch. NR 726.*

Number of "Off-Source" Letters:

☐ **Return Receipt/Signature Confirmation:** Written proof of date on which confirmation was received for notifying any off-source property owner.

☐ **Deed of "Off-Source" Property:** The most recent deed(s) as well as legal descriptions, for all affected deeded **off-source property(ies).** This does not apply to right-of-ways.
Note: *If a property has been purchased with a land contract and the purchaser has not yet received a deed, a copy of the land contract which includes the legal description shall be submitted instead of the most recent deed. If the property has been inherited, written documentation of the property transfer should be submitted along with the most recent deed.*

☐ **Letter To "Governmental Unit/Right-Of-Way" Owners:** Copies of all letters sent by the Responsible Party (RP) to a city, village, municipality, state agency or any other entity responsible for maintenance of a public street, highway, or railroad right-of-way, within or partially within the contaminated area, for contamination exceeding a groundwater Enforcement Standard (ES) and/or soil exceeding a Residual Contaminant Level (RCL) or a Site Specific Residual Contaminant Level (SSRCL).

Number of "Governmental Unit/Right-Of-Way Owner" Letters:

State of Wisconsin \ DEPARTMENT OF NATURAL RESOURCES

Jim Doyle, Governor
Matthew J. Frank, Secretary
Ronald W. Kazmierczak, Regional Director

Northeast Region Headquarters
2984 Shawano Ave.
Green Bay, Wisconsin 54313-6727
Telephone 920-662-5100
FAX 920-662-5413
TTY Access via relay - 711

October 5, 2009

Verrette Materials, Inc.
Attn: Mr. Steve Verette
6140 Highway 32
Gillett, WI 54124

SUBJECT: Final Case Closure with Continuing Obligations
Gillett Cement Products – Maint Bldg, 6116 Highway 32, Gillett, Wisconsin
WDNR BRRTS Activity # 02-43-543304

Dear Mr. Verette:

On August 26, 2009, the Northeast Region Closure Committee reviewed the above referenced case for closure. This committee reviews environmental remediation cases for compliance with state laws and standards to maintain consistency in the closure of these cases. On August 28, 2009, you were notified that the Closure Committee had granted conditional closure to this case.

On September 30, 2009, the Department received final documentation indicating that you have complied with the requirements for final closure (monitoring well abandonment forms received).

Based on the correspondence and data provided, it appears that your case meets the closure requirements in ch. NR 726, Wisconsin Administrative Code. The Department considers this case closed and no further investigation or remediation is required at this time, however, you and future property owners must comply with certain continuing obligations as explained in this letter.

GIS Registry

This site will be listed on the Remediation and Redevelopment Program's GIS Registry. The specific reason is summarized below:

- Groundwater contamination is present above Chapter NR 140 enforcement standards

This letter and information that was submitted with your closure request application will be included on the GIS Registry. To review the sites on the GIS Registry web page, visit the RR Sites Map page at http://dnr.wi.gov/org/aw/rr/gis/index.htm. If the property is listed on the GIS Registry because of remaining contamination and you intend to construct or reconstruct a well, you will need prior Department approval in accordance with s. NR 812.09(4)(w), Wis. Adm. Code. To obtain approval, Form 3300-254 needs to be completed and submitted to the DNR Drinking and Groundwater program's regional water supply specialist. This form can be obtained on-line http://dnr.wi.gov/org/water/dwg/3300254.pdf or at the web address listed above for the GIS Registry.

Closure Conditions

Please be aware that pursuant to s. 292.12 Wisconsin Statutes, compliance with the requirements of this letter is a responsibility to which you and any subsequent property owners must adhere. You must pass on the information about these continuing obligations to the next property owner or owners. If these requirements are not followed or if additional information regarding site conditions indicates that contamination on or from the site poses a threat to public health, safety, welfare, or the environment, the Department may take enforcement action under s. 292.11 Wisconsin Statutes to ensure compliance with the specified requirements, limitations or other conditions related to the property or this case may be reopened pursuant to s. NR 726.09, Wis. Adm. Code. The Department intends to conduct inspections in the future to ensure that the conditions included in this letter are met.

Residual Groundwater Contamination

Groundwater impacted by chlorinated solvent contamination greater than enforcement standards set forth in ch. NR140, Wis. Adm. Code, is present on this contaminated property. For more detailed information regarding the locations where groundwater samples have been collected (i.e., monitoring well locations) and the associated contaminant concentrations, refer to the Remediation and Redevelopment Program's GIS Registry at the RR Sites Map page at http://dnr.wi.gov/org/aw/rr/gis/index.htm.

Residual Soil Contamination

A limited quantity of petroleum and chlorinated solvent contaminated soil may remain underneath and in the general vicinity of the existing maintenance building as indicated in the information submitted to the Department of Natural Resources. If any impacted soil is excavated in the future, then pursuant to ch. NR 718 or, if applicable, ch. 289, Stats., and chs. 500 to 536, the property owner at the time of excavation must sample and analyze the excavated soil to determine if residual contamination remains. If sampling confirms that contamination is present the property owner at the time of excavation will need to determine whether the material is considered solid or hazardous waste and ensure that any storage, treatment or disposal is in compliance with applicable standards and rules. In addition, all current and future owners and occupants of the property need to be aware that excavation of the contaminated soil may pose an inhalation or other direct contact hazard and as a result special precautions may need to be taken to prevent a direct contact health threat to humans.

Dewatering Permits

The Department's Watershed Management Program regulates point source discharges of contaminated water, including discharges to surface waters, storm sewers, pits or to the ground surface. This includes discharges from construction related dewatering activities, including utility and building construction.

Based on the concentrations of contaminants remaining in groundwater at this location, it appears likely that dewatering activities would require a permit from the Watershed Management Program. If you or any other person plan to conduct such activities, you or that person must contact that program, and if necessary, apply for the necessary discharge permit. Additional information regarding discharge permits is available at http://www.dnr.state.wi.us/org/water/wm/ww/

The Department appreciates your efforts to restore the environment at this site. If you have any questions regarding this closure decision or anything outlined in this letter, please contact Keld Lauridsen at (920) 662-5420.

Sincerely,

Bruce G. Urben, Team Supervisor
Northeast Region Remediation & Redevelopment Program

cc: John Hunt, Coleman Engineering Company (ecopy - jhunt@coleman-engineering.com)

State of Wisconsin \ DEPARTMENT OF NATURAL RESOURCES

Jim Doyle, Governor
Matthew J. Frank, Secretary
Ronald W. Kazmierczak, Regional Director

Northeast Region Headquarters
2984 Shawano Ave.
Green Bay, Wisconsin 54313-6727
Telephone 920-662-5100
FAX 920-662-5413
TTY Access via relay - 711

August 28, 2009

Verrette Materials, Inc.
Attn: Mr. Steve Verette
6140 Highway 32
Gillett, WI 54124

Subject: Conditional Closure Decision with Requirements to Achieve Final Closure
Gillett Cement Products – Maint Bldg, 6116 Highway 32, Gillett, Wisconsin
WDNR BRRTS Activity # 02-43-543304

Dear Mr. Verette:

On August 26, 2009, the Northeast Region Closure Committee reviewed your request for closure of the case described above. The Closure Committee reviews environmental remediation cases for compliance with state rules and statutes to maintain consistency in the closure of these cases. After careful review of the closure request, the Closure Committee has determined that the petroleum and chlorinated solvent contamination identified in the vicinity of the existing maintenance building appears to have been investigated and remediated to the extent practicable under site conditions. Your case has been remediated to Department standards in accordance with s. NR 726.05, Wis. Adm. Code and will be closed if the following conditions are satisfied:

MONITORING WELL ABANDONMENT

The monitoring wells at the site must be properly abandoned in compliance with ch. NR 141, Wis. Adm. Code. Documentation of well abandonment must be submitted to me on Form 3300-005 found at http://dnr.wi.gov/org/water/dwg/gw/ or provided by the Department of Natural Resources.

PURGE WATER, WASTE AND SOIL PILE REMOVAL

Any remaining purge water, waste and/or soil piles generated as part of site investigation or remediation activities must be removed from the site and disposed of or treated in accordance with Department of Natural Resources' rules. Once that work is completed, please send appropriate documentation regarding the treatment or disposal of the remaining purge water, waste and/or soil piles.

When the above conditions have been satisfied, please submit the appropriate documentation (for example, well abandonment forms, disposal receipts, copies of correspondence, etc.) to verify that applicable conditions have been met, and your case will be closed. Your site will be listed on the DNR Remediation and Redevelopment GIS Registry. Information that was submitted with your closure request application will be included on the GIS Registry. To review the site on the GIS Registry web page, visit the RR Sites Map page at: http://dnr.wi.gov/org/aw/rr/gis/index.htm.

REMAINING SOIL CONTAMINATION

A limited quantity of petroleum and chlorinated solvent contaminated soil may be present underneath and in the general vicinity of the existing maintenance building. Any soil excavated in this general area in the future should be sampled for the contaminants of concern and handled properly

Please be aware that the case may be reopened pursuant to s. NR 726.09, Wis. Adm. Code, if additional information regarding site conditions indicates that contamination on or from the site poses a threat to public health, safety, or welfare or to the environment.

We appreciate your efforts to restore the environment at this site. If you have any questions regarding this letter, please contact me at (920) 662 -5420.

Sincerely,

Keld B. Lauridsen
Hydrogeologist
Remediation & Redevelopment Program

cc: John Hunt, Coleman Engineering Company (ecopy - jhunt@coleman-engineering.com)

Document Number

STATE BAR OF WISCONSIN FORM 1 - 2000

WARRANTY DEED

This Deed, made between **GILLETT CEMENT PRODUCTS, INC., A WISCONSIN CORPORATION a/k/a GILLETT CEMENT PRODUCTS INCORPORATED,** Grantor, and **VERRETTE MATERIALS, INC., A WISCONSIN CORPORATION** Grantee.

Grantor, for a valuable consideration, conveys to Grantee the following described real estate in **OCONTO** County, State of Wisconsin (the "Property") (if more space is needed, please attach addendum):

SEE ATTACHED

Recording Area

Name and Return Address
Mollie K. Grever
Corporate Counsel Group LLP
4144 Pennsylvania Avenue
Kansas City, MO 64111

Together with all appurtenant rights, title and interests.

SEE ATTACHED
Parcel Identification Number (PIN)
This **IS NOT** homestead property
~~(is)~~ (is not)

Grantor warrants that the title to the Property is good, indefeasible in fee simple and free and clear of encumbrances except **municipal and zoning ordinances and agreements entered under them, recorded easements for the distributions of utility and municipal services, and recorded building and use restrictions and covenants.**

Dated this 1ST day of AUGUST, 2005.

* _____

* _____

GILLETT CEMENT PRODUCTS, INC.

* **BY:** _____

* **CURTIS D. STREBLOW, PRESIDENT**

AUTHENTICATION

Signature(s) _____

authenticated this _____ day of _____, _____

* _____

TITLE: MEMBER STATE BAR OF WISCONSIN
(If not, _____
authorized by §706.06, Wis. Stats.)

THIS INSTRUMENT WAS DRAFTED BY
ATTORNEY FREDERICK L. SCHMIDT

(Signatures may be authenticated or acknowledged. Both are not necessary.)

ACKNOWLEDGMENT

STATE OF WISCONSIN)
) ss.
BROWN County)

Personally came before me this 1ST day of AUGUST, 2005 the above named CURTIS D. STREBLOW

to me known to be the person(s) who executed the foregoing instrument and acknowledged the same.

* FREDERICK L. SCHMIDT
Notary Public, State of WISCONSIN
My Commission is permanent. (If not, state expiration date: _____, _____.)

* Names of persons signing in any capacity must be typed or printed below their signature.

GRANTOR: GILLETT CEMENT PRODUCTS, INC. A/K/A ...

GRANTEE: VERRETTE MATERIALS, INC.

LEGAL DESCRIPTION:

PART OF THE SOUTHWEST QUARTER OF THE SOUTHWEST QUARTER (SW 1/4 OF SW 1/4), SECTION FIFTEEN (15), TOWNSHIP TWENTY-EIGHT (28) NORTH, RANGE EIGHTEEN (18) EAST, IN THE TOWN OF GILLETT, OCONTO COUNTY, WISCONSIN, DESCRIBED AS FOLLOWS: COMMENCING 458.7 FEET NORTH FROM THE SOUTHWEST CORNER OF SECTION 15, TOWNSHIP 28 NORTH, RANGE 18 EAST, THIS SHALL BE THE PLACE OF BEGINNING: THENCE EAST 208.7 FEET; THENCE SOUTH 60 FEET; THENCE WEST 208.7 FEET; THENCE NORTH ALONG THE SECTION LINE 60 FEET TO THE PLACE OF BEGINNING.

AND;
PART OF THE SOUTHWEST QUARTER OF THE SOUTHWEST QUARTER (SW 1/4 OF SW 1/4), SECTION FIFTEEN (15), TOWNSHIP TWENTY-EIGHT (28) NORTH, RANGE EIGHTEEN (18) EAST, IN THE TOWN OF GILLETT, OCONTO COUNTY, WISCONSIN, DESCRIBED AS FOLLOWS: THAT PART OF THE NORTH 60.00 FEET OF THE SOUTH 517.04 FEET OF THE SW 1/4 OF SW 1/4, SECTION 15, TOWNSHIP 28 NORTH, RANGE 18 EAST, LYING SOUTHWESTERLY OF A LINE 60.00 FEET SOUTHWESTERLY OF AND PARALLEL WITH THE CENTERLINE OF STH 32 AS LAID OUT UNDER WISCONSIN DEPARTMENT OF TRANSPORTATION PROJECT 3921, GILLETT RELOCATION, AND LYING EAST OF A LINE 60.00 FEET EASTERLY OF AND PARALLEL WITH A REFERENCE LINE DESCRIBED AS FOLLOWS:
BEGINNING AT THE SOUTHWEST CORNER OF SAID SECTION 15; THENCE NORTH 00 DEG. 18 MIN. EAST, 434.04 FEET ALONG THE WEST SECTION LINE; THENCE ALONG THE ARC OF A 26 DEG. CURVE TO THE RIGHT 200 FEET.

TAX PARCEL NO.: 016-151502333C
ADDRESS: 6120 HIGHWAY 32

AND

PART OF THE SOUTHWEST QUARTER OF THE SOUTHWEST QUARTER (SW 1/4 OF SW 1/4), SECTION FIFTEEN (15), TOWNSHIP TWENTY-EIGHT (28) NORTH, RANGE EIGHTEEN (18) EAST, IN THE TOWN OF GILLETT, OCONTO COUNTY, WISCONSIN, DESCRIBED AS FOLLOWS: COMMENCING 319 FEET NORTH FROM THE SOUTHWEST CORNER OF SECTION 15, TOWNSHIP 28 NORTH, RANGE 18 EAST, THIS SHALL BE THE PLACE OF BEGINNING: THENCE EAST, 208.7 FEET; THENCE NORTH 139.7 FEET; THENCE WEST 208.7 FEET TO SECTION LINE; THENCE SOUTH ALONG SECTION LINE 139.7 FEET TO THE PLACE OF BEGINNING. EXCEPTING THEREFROM PART DEEDED IN VOL. 197 DEEDS, PAGE 339. FURTHER EXCEPTING THEREFROM ANY PART USED/DEEDED FOR ROAD / HIGHWAY PURPOSES.

TAX PARCEL NO.: 016-151502433D
ADDRESS: 6116 HIGHWAY 32

AND

LOT EIGHT (8), ACCORDING TO THE RECORDED PLAT OF TOWN OF GILLETT ASSESSOR'S PLAT I, IN THE TOWN OF GILLETT, OCONTO COUNTY, WISCONSIN. EXCEPT VOL 700 RECORDS, PAGE 568.

TAX PARCEL NO.: 016-1616038
ADDRESS: HIGHWAY 32

AND

LOT TEN (10), ACCORDING TO THE RECORDED TOWN OF GILLETT ASSESSOR'S PLAT I, IN THE TOWN OF GILLETT, OCONTO COUNTY, WISCONSIN.

TAX PARCEL NO.: 016-1616040
ADDRESS: HIGHWAY 32

AND

LOT ELEVEN (11), ACCORDING TO THE RECORDED TOWN OF GILLETT ASSESSOR'S PLAT I, IN THE TOWN OF GILLETT, OCONTO COUNTY, WISCONSIN.

TAX PARCEL NO.: 016-1616041
ADDRESS: HIGHWAY 32

AND

LOT TWELVE (12), ACCORDING TO THE RECORDED TOWN OF GILLETT ASSESSOR'S PLAT I, IN THE TOWN OF GILLETT, OCONTO COUNTY, WISCONSIN.

AND;
OUTLOT ONE (1), VOL. 16 CERTIFIED SURVEY MAPS, PAGE 48, MAP NO. 2698, AS DOC. NO. 457403; SAID MAP BEING PART OF LOT THIRTEEN (13), ACCORDING TO THE RECORDED TOWN OF GILLETT ASSESSOR'S PLAT I, IN THE TOWN OF GILLETT, OCONTO COUNTY, WISCONSIN.

TAX PARCEL NO.: 016-1616042
ADDRESS: 6141 HIGHWAY 32N

AND

OUTLOT ONE (1), ACCORDING TO THE RECORDED TOWN OF GILLETT ASSESSOR'S PLAT I, IN THE TOWN OF GILLETT, OCONTO COUNTY, WISCONSIN.

TAX PARCEL NO.: 016-1616047
ADDRESS: NORTH OF 6141 HIGHWAY 32N

AND

PART OF THE NORTHEAST QUARTER OF THE SOUTHEAST QUARTER (NE 1/4 OF SE 1/4), SECTION TWENTY-NINE (29), TOWNSHIP TWENTY-EIGHT (28) NORTH, RANGE EIGHTEEN (18) EAST, IN THE TOWN OF GILLETT, OCONTO COUNTY, WISCONSIN, DESCRIBED AS FOLLOWS: COMMENCING 26 RODS AND 17 1/2 LINKS WEST FROM THE EAST QUARTER POST OF SECTION 29; THENCE WEST ON QUARTER LINE 53 RODS AND 8 1/2 LINKS TO THE 1/8 POST; THENCE SOUTH 30 RODS; THENCE EAST 53 RODS 8 1/2 LINKS; THENCE NORTH 30 RODS TO THE PLACE OF BEGINNING.

TOGETHER WITH INGRESS AND EGRESS EASEMENT SET FORTH IN VOL. 102 DEEDS, PAGE 343.

TAX PARCEL NO.: 016-29290541C
ADDRESS: OLD 22

AND

THAT PART OF THE SOUTHWEST QUARTER OF THE NORTHWEST QUARTER (SW 1/4 OF NW 1/4) OF SECTION THREE (3), TOWNSHIP THIRTY-ONE (31) NORTH, RANGE SIXTEEN (16) EAST, TOWN OF MOUNTAIN, OCONTO COUNTY, WISCONSIN, LYING SOUTH AND WEST OF HIGHWAY 32 DESCRIBED AS FOLLOWS: COMMENCING AT THE INTERSECTION OF THE CENTER LINE OF STATE HIGHWAY 32 AND THE WESTERN BOUNDARY OF SAID SECTION 3; THENCE SOUTHERLY ALONG THE WESTERN BOUNDARY OF SAID SECTION, 350 FEET; THENCE EAST 100 FEET; THENCE NORTH 275 FEET MORE OR LESS TO THE CENTER LINE OF STATE HIGHWAY 32; THENCE NORTHWESTERLY ALONG THE CENTERLINE OF SAID HIGHWAY TO THE PLACE OF BEGINNING.

TAX PARCEL NO.: 029-030302023B1
ADDRESS: HIGHWAY 32

AND

THE SOUTHEAST QUARTER OF THE NORTHEAST QUARTER (SE 1/4 OF NE 1/4), SECTION THIRTEEN (13), TOWNSHIP TWENTY-NINE (29) NORTH, RANGE NINETEEN (19) EAST, IN THE TOWN OF SPRUCE, OCONTO COUNTY, WISCONSIN. EXCEPTING THEREFROM ANY PART USED FOR ROAD / HIGHWAY PURPOSES.

TAX PARCEL NO.: 038-131300414
ADDRESS: CHAROLAIS ROAD

Legal Description per
Bay Title and Abstract, Inc.
Title Commitment No. NTI-13860

Part of the Southwest Quarter of the Southwest Quarter(SW ¼ of SW ¼), Section Fifteen (15), Township Twenty-eight (28) North, Range Eighteen (18) East, in the Town of Gillett, Oconto County, Wisconsin, described as follows: Commencing 458.7 feet North from the Southwest corner of Section 15, Township 28 North, Range 18 East, this shall be the place of beginning; Thence East 208.7 feet; thence South 60 feet; thence West 208.7 feet; thence North along the section line 60 feet to the place of beginning.
AND;
Part of the Southwest Quarter of the Southwest Quarter (SW ¼ of SW ¼), Section Fifteen (15), Township Twenty-eight (28) North, Range Eighteen (18) East, in the Town of Gillett, Oconto County, Wisconsin, described as follows: That part of the North 60.00 feet of the South 517.04 feet of the SW ¼ of SW ¼, Section 15, Township 28 North, Range 18 East, lying Southwesterly of a line 60.00 feet Southwesterly of and parallel with the centerline of STH 32 as laid out under Wisconsin Department of Transportation Project 3921, Gillett Relocation, and lying East of a line 60.00 feet Easterly of and parallel with a reference line described as follows:

Beginning at the Southwest corner of said Section 15; thence North 00 deg. 18 min. East, 434.04 feet along the West Section Line; thence along the arc of a 26 deg. Curve to the right 200 feet.

Part of the Southwest Quarter of the Southwest Quarter (SW ¼ of SW ¼), Section Fifteen (15), Township Twenty-eight (28) North, Range Eighteen (18) East, in the Town of Gillett, Oconto County, Wisconsin, described as follows: Commencing 319 feet North from the Southwest corner of Section 15, Township 28 North, Range 18 East, this shall be the place of beginning; Thence East 208.7 feet; thence North 139.7 feet; thence West 208.7 feet to Section Line; thence South along Section Line 139.7 feet to the place of beginning. EXCEPTING THEREFROM part deeded in Vol. 197 Deeds, Page 339. FURTHER EXCEPTING THEREFROM any part used/deeded for road / highway purposes.

Lot Eight (8) according to the recorded Plat of Town of Gillett Assessor's Plat I, in the Town of Gillett, Oconto County, Wisconsin. EXCEPT Vol 700 Records, page 568.

Lot Ten (10) according to the recorded Plat of Town of Gillett Assessor's Plat I, in the Town of Gillett, Oconto County, Wisconsin.

Lot Eleven (11) according to the recorded Plat of Town of Gillett Assessor's Plat I, in the Town of Gillett, Oconto County, Wisconsin.

Lot Twelve (12) according to the recorded Plat of Town of Gillett Assessor's Plat I, in the Town of Gillett, Oconto County, Wisconsin.

AND;

Outlot One (1), Vol. 16 Certified Survey Maps, Page 48, Map No. 2698, as Doc. No. 457403; said map being part of Lot Thirteen (13), according to the Recorded Town of Gillett Assessor's Plat I, in the Town of Gillett, Oconto County, Wisconsin.

Outlot One (1), according to the recorded Plat of Town of Gillett Assessor's Plat I, in the Town of Gillett, Oconto County, Wisconsin.

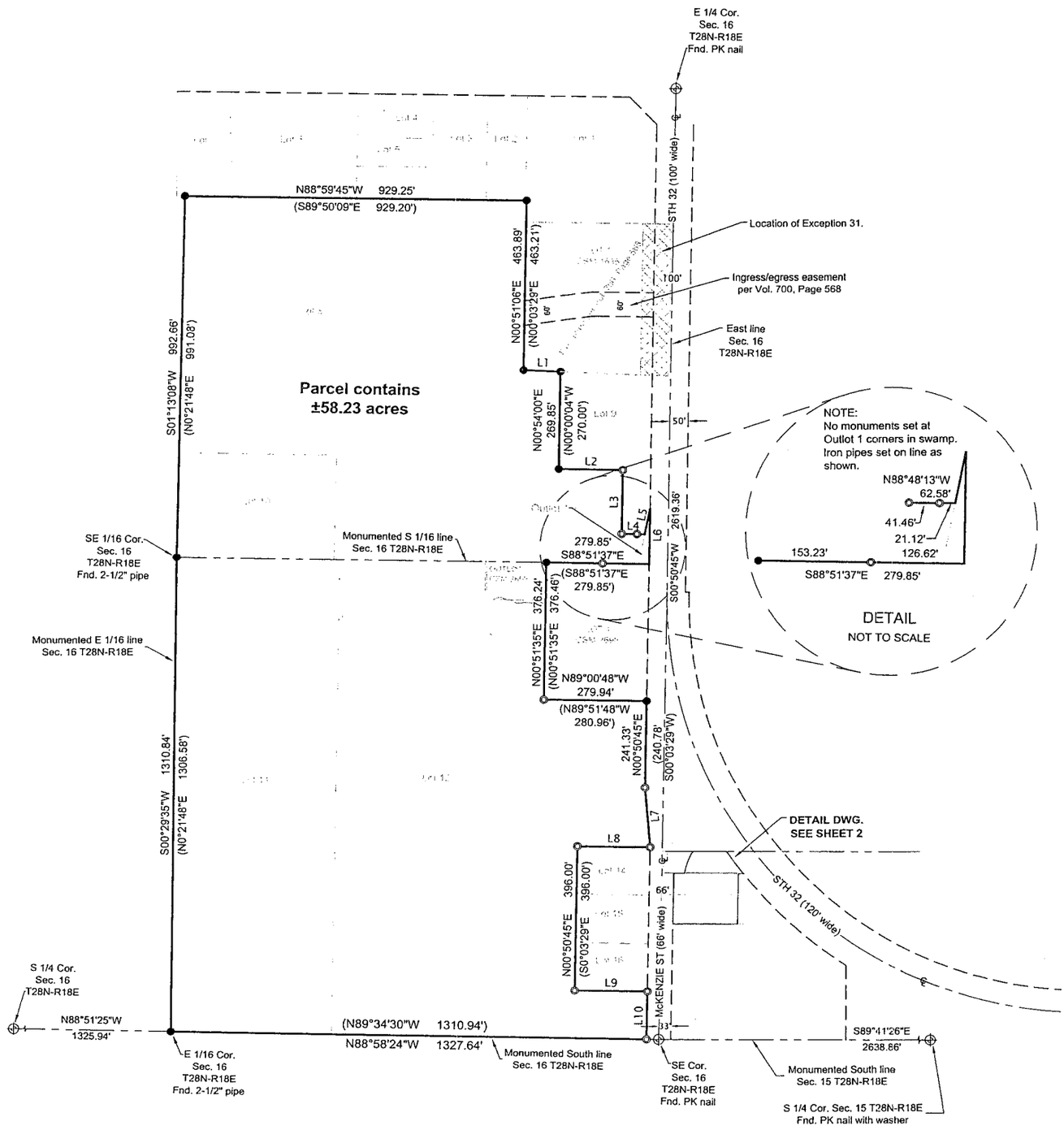

Bay Title and Abstract, Inc.
Title Committment NTI - 13360
Schedule B - Section 2

Exceptions:

29. State has rights to expand highway onto property of Lot 1, CSM 2698, does not affect Champion Inc. property.
31. General telephone company easement east of property.

LINE TABLE				
LINE	LENGTH	BEARING	REC. LENGTH	REC. BEARING
L1	100.28	N87°20'43"W	102.73	N89°42'17"W
L2	174.00	N88°45'14"W	174.00	S89°42'17"E
L3	174.00	N00°54'00"E	174.00	N0°00'04"W
L4	62.58	N88°48'13"W	62.03	N89°42'17"W
L5	79.92	S11°38'14"W	70.76	N10°51'06"E
L6	154.04	N00°50'45"E	153.56	S0°03'29"W
L7	166.10	N05°01'43"W	166.10	S05°49'E
L8	198.00	S89°09'15"E	198.00	N89°34'30"W
L9	198.00	N89°09'15"W	198.00	S89°34'30"E
L10	132.00	N00°50'45"E	132.00	S0°03'29"W

SCALE: 1" = 300'

0 150 300 600

I HEREBY CERTIFY ON BEHALF OF COLEMAN ENGINEERING THAT SAID SURVEY AND THE ABOVE MAP WERE MADE IN ACCORDANCE WITH THE APPLICABLE SECTIONS OF CHAPTER AE-7 OF THE WISCONSIN ADMINISTRATIVE CODE AND THAT THE INFORMATION CONTAINED THEREON IS, TO THE BEST OF MY KNOWLEDGE, INFORMATION AND BELIEF, A TRUE AND ACCURATE REPRESENTATION THEREOF.

JAMES H. MOORE R.L.S. S-1641

BEARINGS:
NAD '83 - Static GPS observations
REVISION: 8-1-05 - Exception 31

SEC. 15&16 | T 28 N | R 18 E

TOWN OF GILLETT

OCONTO CO, WI

SCALE: 1" = 300'

LEGEND
- FOUND AS NOTED
- SET 1" IRON PIPE 1.13 LB/FT w/cap R.L.S. S-1641
- FOUND AS NOTED

COLEMAN ENGINEERING COMPANY
ENGINEERING-SURVEYING-GEOTECHNICAL
635 CIRCLE DRIVE
IRON MOUNTAIN, MICHIGAN 49801
PHONE: (906) 774-1440 FAX: (906) 774-7776
E-MAIL: ironmountain@coleman-engineering.com

PLAT OF SURVEY

Part of the E 1/2 of the SE 1/4 of Section 16 and part of the SW 1/4 of the SW 1/4 of Section 15 T28N-R18E, Oconto County, Wisconsin

PREPARED FOR: CHAMPION INC.
P.O. BOX 490
IRON MOUNTAIN, MI 49801

DRAWN: TGH	FB#	PG:	DATE: 07-25-05	SHEET 1 OF 3	JOB: 05018E-1

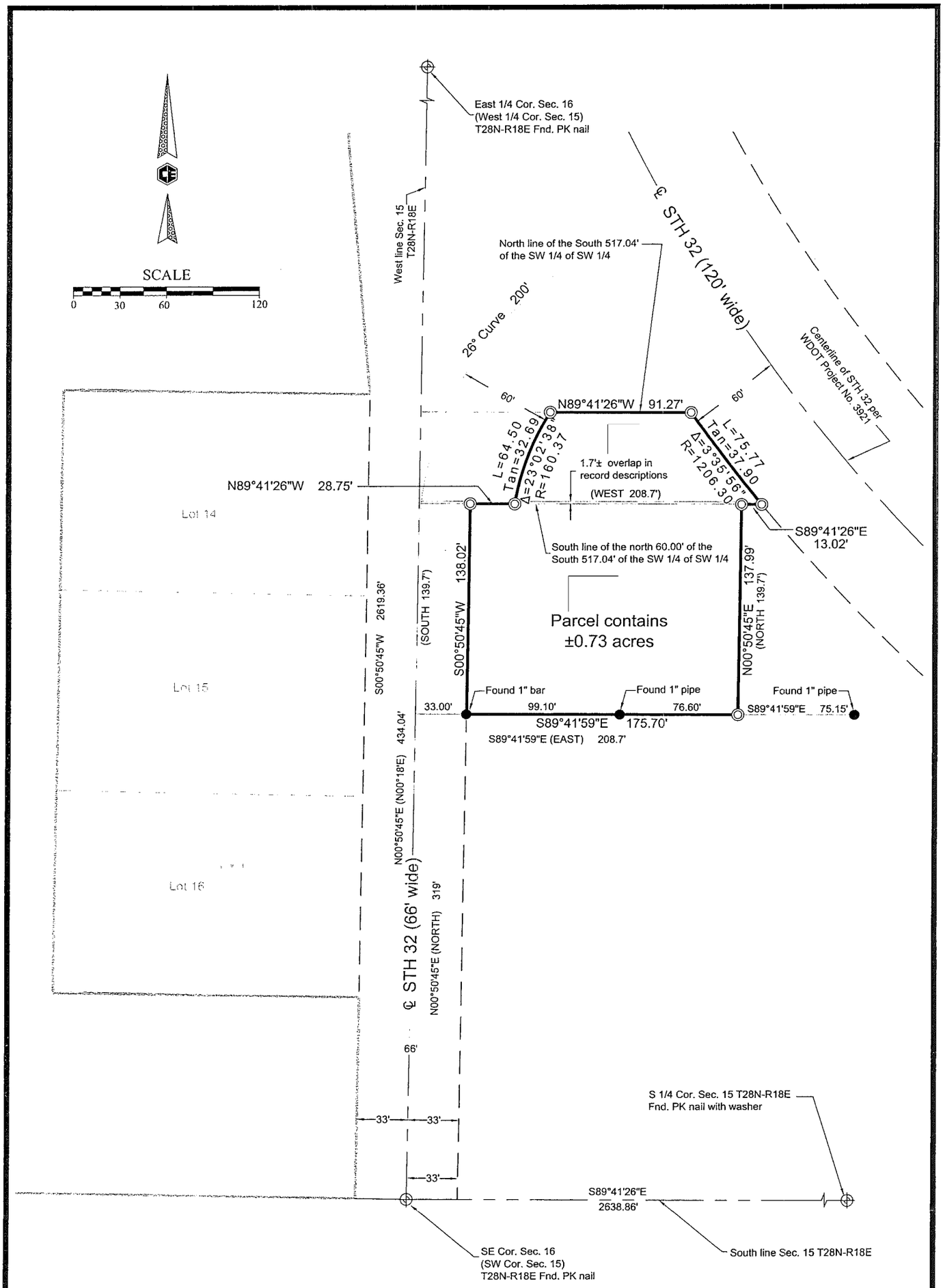

I HEREBY CERTIFY ON BEHALF OF COLEMAN ENGINEERING THAT SAID SURVEY AND THE ABOVE MAP WERE MADE IN ACCORDANCE WITH THE APPLICABLE SECTIONS OF CHAPTER AE-7 OF THE WISCONSIN ADMINISTRATIVE CODE AND THAT THE INFORMATION CONTAINED THEREON IS, TO THE BEST OF MY KNOWLEDGE, INFORMATION AND BELIEF, A TRUE AND ACCURATE REPRESENTATION THEREOF

JAMES H. MOORE R.L.S. S-1641

HEARINGS:
NAD '83 - Static GPS observations

REVISION:

SEC. 15&16	T 28 N	R 18 E
TOWN OF GILLETT		
OCONTO CO, WI.		

SCALE: 1" = 60'

LEGEND
- FOUND AS NOTED
- SET 1" IRON PIPE 1.13 LB/FT w/cap R.L.S. S-1641
- FOUND AS NOTED

COLEMAN ENGINEERING COMPANY
ENGINEERING-SURVEYING-GEOTECHNICAL
635 CIRCLE DRIVE
IRON MOUNTAIN, MICHIGAN 49801
PHONE: (906) 774-3440 FAX: (906) 774-7776
E-MAIL: ironmountain@coleman-engineering.com

PLAT OF SURVEY

Part of the E 1/2 of the SE 1/4 of Section 16 and
part of the SW 1/4 of the SW 1/4 of Section 15
T28N-R18E, Oconto County, Wisconsin

PREPARED FOR: CHAMPION INC.
P.O. BOX 490
IRON MOUNTAIN, MI 49801

DRAWN: TGB	FB#	PG:	DATE: 07-25-05	SHEET 2 OF 3	JOB: 050108-1

Oconto County SOLO IMS

Parcel ID: 016151502333C

Assessed Acreage: 0.29

Primary Owner: VERRETTE MATERIALS INC

Address: PO BOX 578
IRON MOUNTAIN MI
49801-0000

Physical Address: 6120 STATE HWY 32

Supervisory District: 20

School District: GILLETT

Other Districts:

Legal Description:
SEC15-T28-R18E COM 458.7' N OF SW COR OF SW SW, THE E208.7', TH S 60', W 208.7'TH N ALG SEC LN 60' TO POB & PRT RD WAY

Vol/Page: 1164-145

Document Number: 578334

Land Value: $0.00

Improved Value: $0.00

Scale: 1 inch = 150 feet

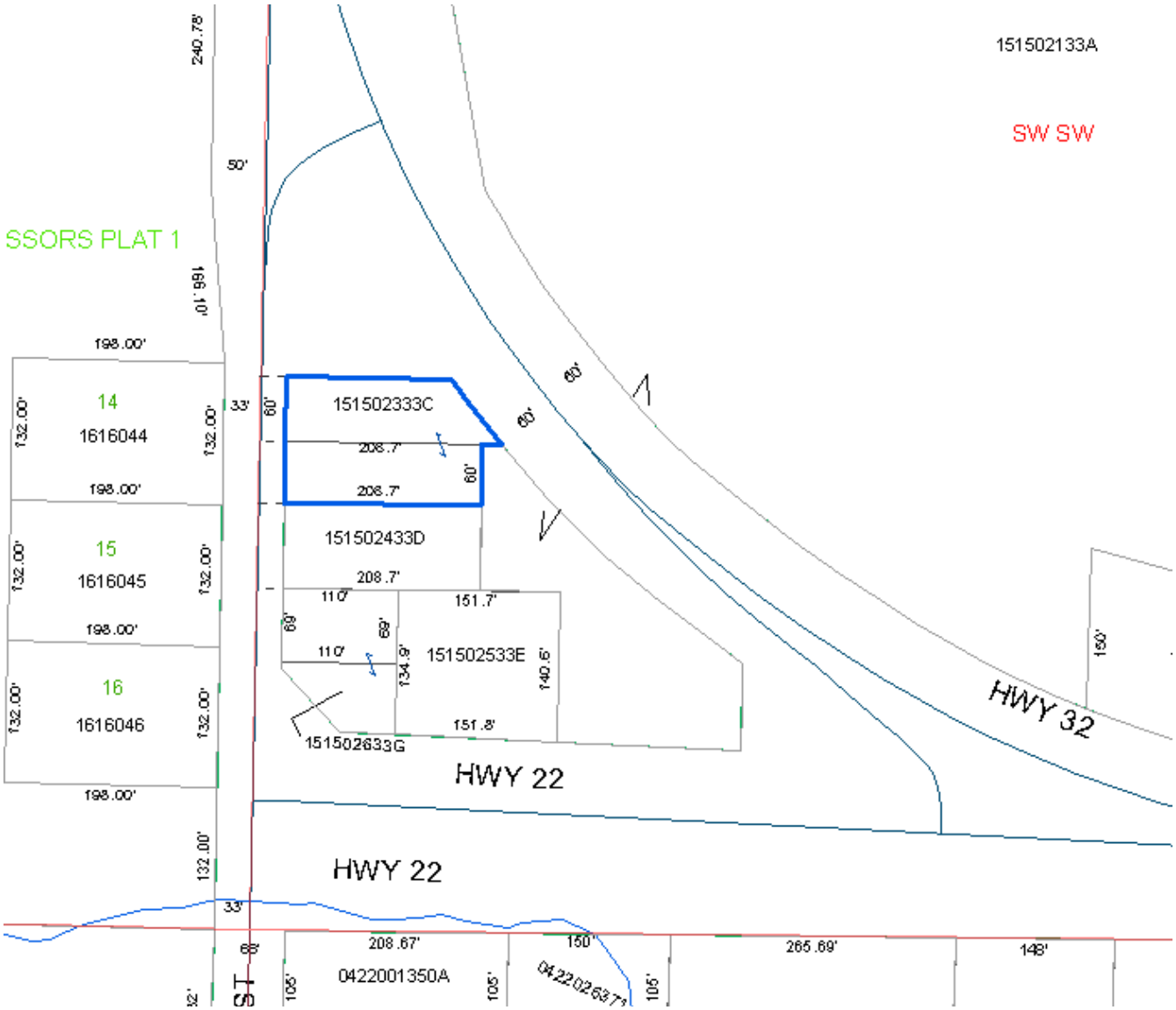

Oconto County Land Information Systems makes every effort to produce the most current and accurate information possible. No warranties, expressed or implied, are provided for the data provided, its use, or its interpretation. Oconto County does not guarantee the accuracy of the material contained herein and is not responsible for any misuse or misrepresentation of this information or its derivatives. Oconto County parcel maps are for tax and real property listing purposes only and do NOT represent a survey. The tax parcel maps are compiled from official records, including survey plats and deeds, but only contain the information required for Oconto County business. You should always use the original recorded documents for legal or survey information.

Responsible Party Statement

I, Stephen Verrette, President of Verrette Materials, Inc., which owns the Gillett Concrete Products Inc. - Gillett Facility, believe that the legal description included in this GIS Registry Packet at the Maintenance Building Site (BRRTS# 02-43-543304) is for the Gillett facility.

Signed,

Stephen Verrette, President
Verrette Materials, Inc.

Date 9-1-09

NORTH
SCALE: NONE

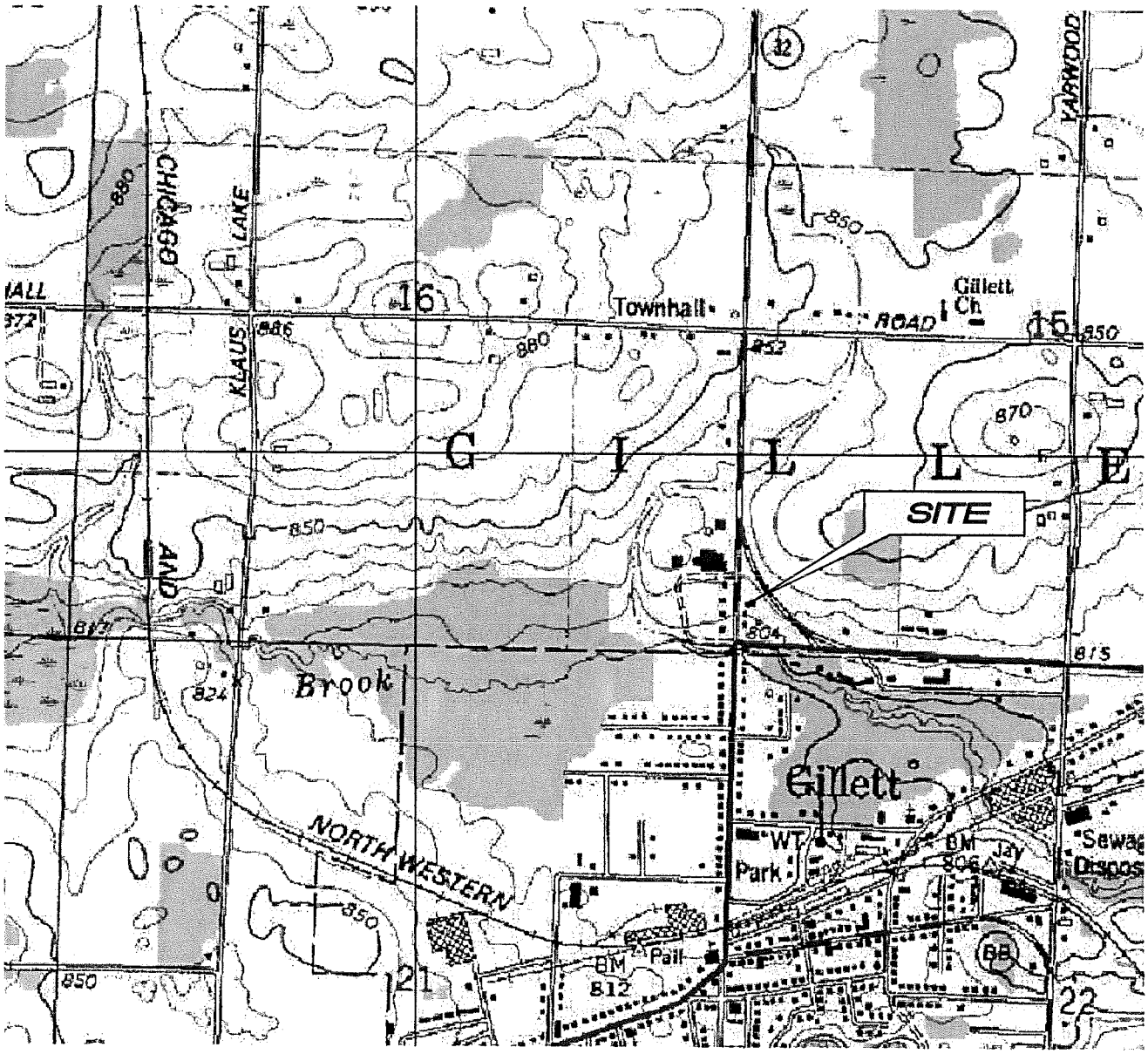

FIGURE 1
SITE LOCATION MAP
GILLETT CEMENT PRODUCTS
MAINTENANCE BUILDING SITE BRRTS #02-43-543304
GILLETT, WISCONSIN

COLEMAN ENGINEERING COMPANY
635 CIRCLE DRIVE
IRON MOUNTAIN, MICHIGAN 49801

DATE 7/9/09
JOB NO 05018-N
CADD FILE 05018-N-GILLETT

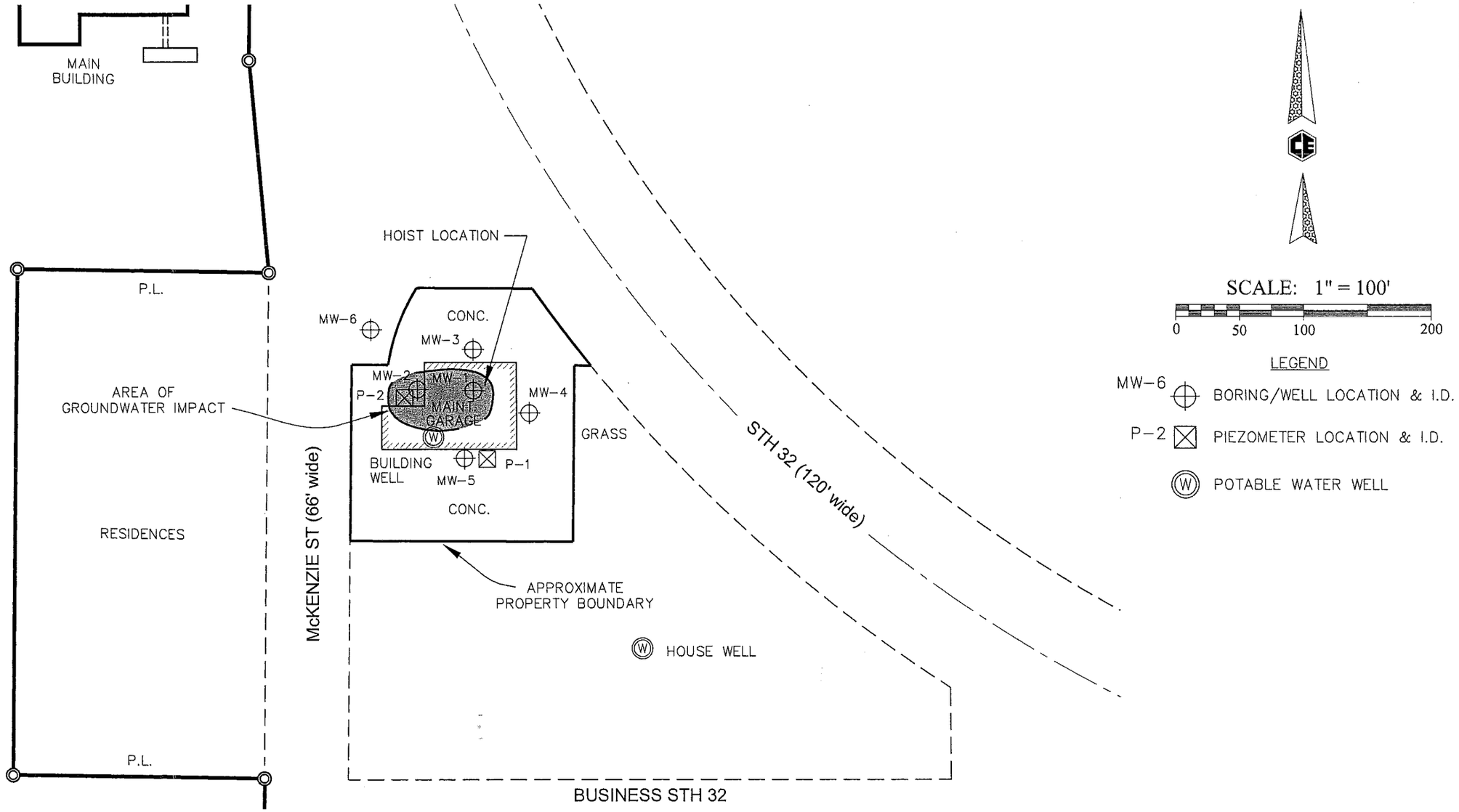

FIGURE 2 – SITE MAP
GILLETT CEMENT PRODUCTS – GILLETT, WISCONSIN
MAINTENANCE BUILDING SITE BRRTS #02-43-543304

COLEMAN ENGINEERING COMPANY
635 CIRCLE DRIVE
IRON MOUNTAIN, MICHIGAN 49801

DATE 7/30/09
JOB NO 05018-N
CADD FILE 05018-N-GILLETT_MAINT_GIS_SITE

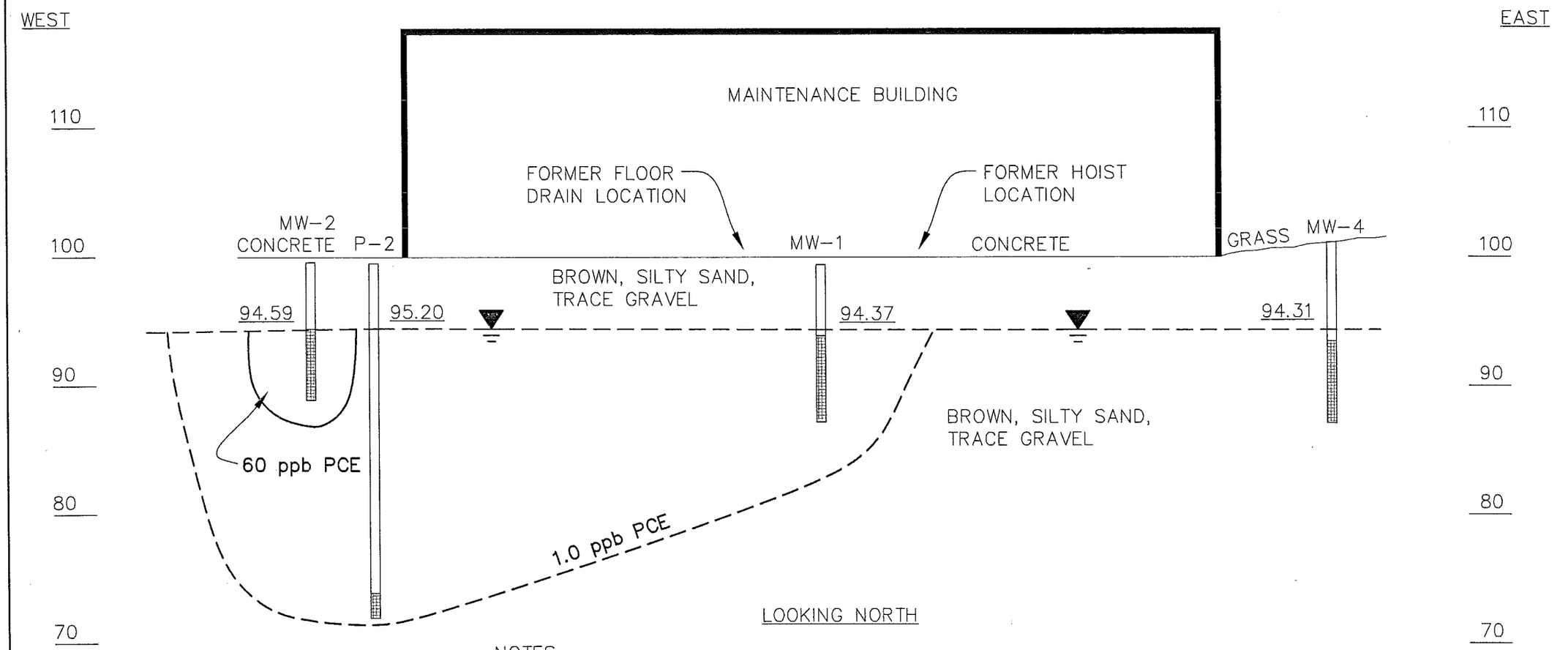

NOTES:

- ELEVATIONS REFERENCED TO ON-SITE BENCHMARK OF 100.00
- GROUNDWATER ELEVATION FROM JUNE 4, 2009
- ppb PCE - PARTS PER BILLION TETRACHLORETHEN

SCALE: 1" = 10'

0 5 10 20

FIGURE 3
GROUNDWATER ISOCONCENTRATION CROSS-SECTION
GILLETT CEMENT PRODUCTS - GILLETT, WISCONSIN
MAINTENANCE BUILDING SITE BRRTS #02-43-543304

COLEMAN ENGINEERING COMPANY
635 CIRCLE DRIVE
IRON MOUNTAIN, MICHIGAN 49801

DATE 7/30/09
JOB NO 05018-N
CADD FILE 05018-N-GILLETT_SEC_GIS

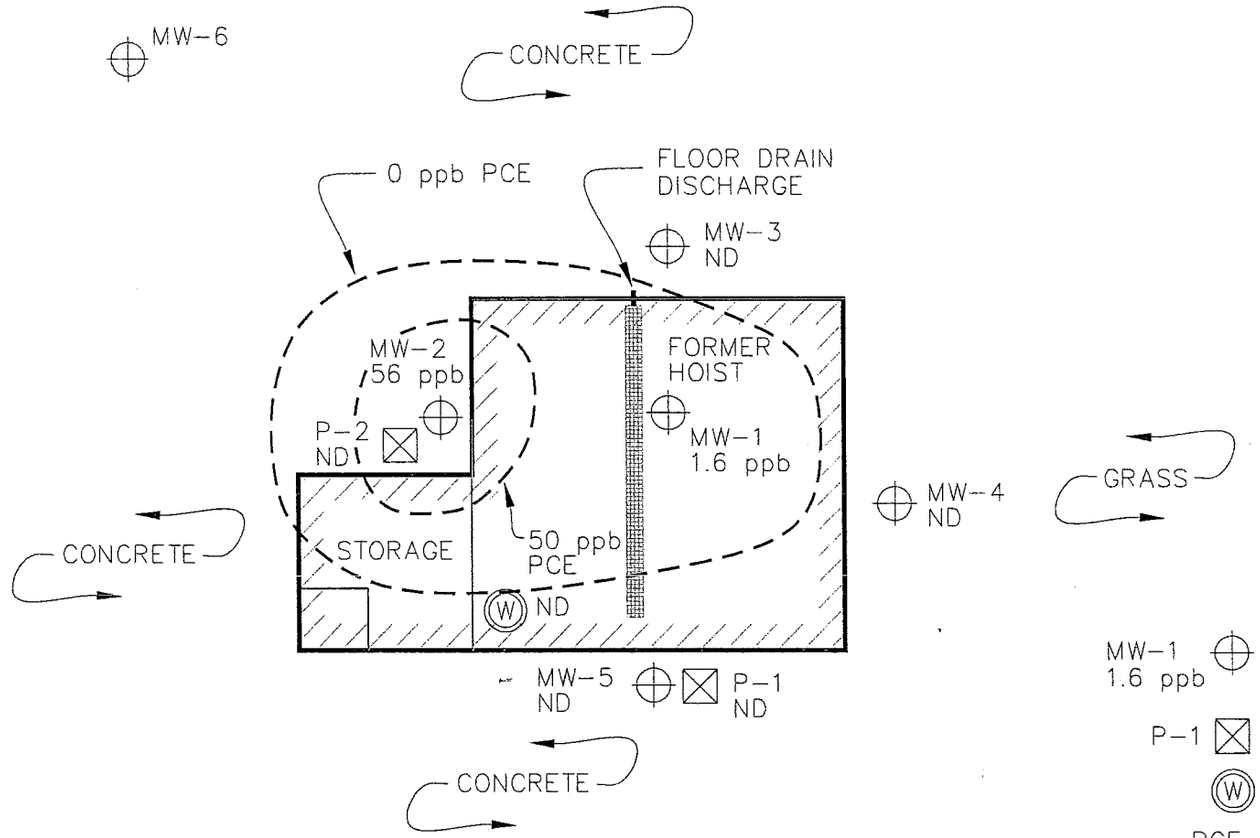

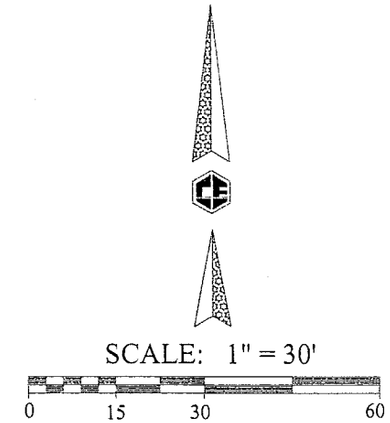

LEGEND

MW-1 1.6 ppb	BORING/WELL LOCATION, I.D. & PCE CONCENTRATION
P-1	PIEZOMETER LOCATION & I.D.
W	POTABLE WATER WELL
PCE	TETRACHLOROETHENE
ppb	PARTS PER BILLION
ND	NON DETECT

FIGURE 8
PCE ISO CONCENTRATION MAP
GILLETT CEMENT PRODUCTS - GILLETT, WISCONSIN
MAINTENANCE BUILDING SITE BRRTS #02-43-543304

COLEMAN ENGINEERING COMPANY
635 CIRCLE DRIVE
IRON MOUNTAIN, MICHIGAN 49801

DATE 7/10/09
JOB NO 05018-N
CADD FILE 05018-N-GILLETT_MAINT

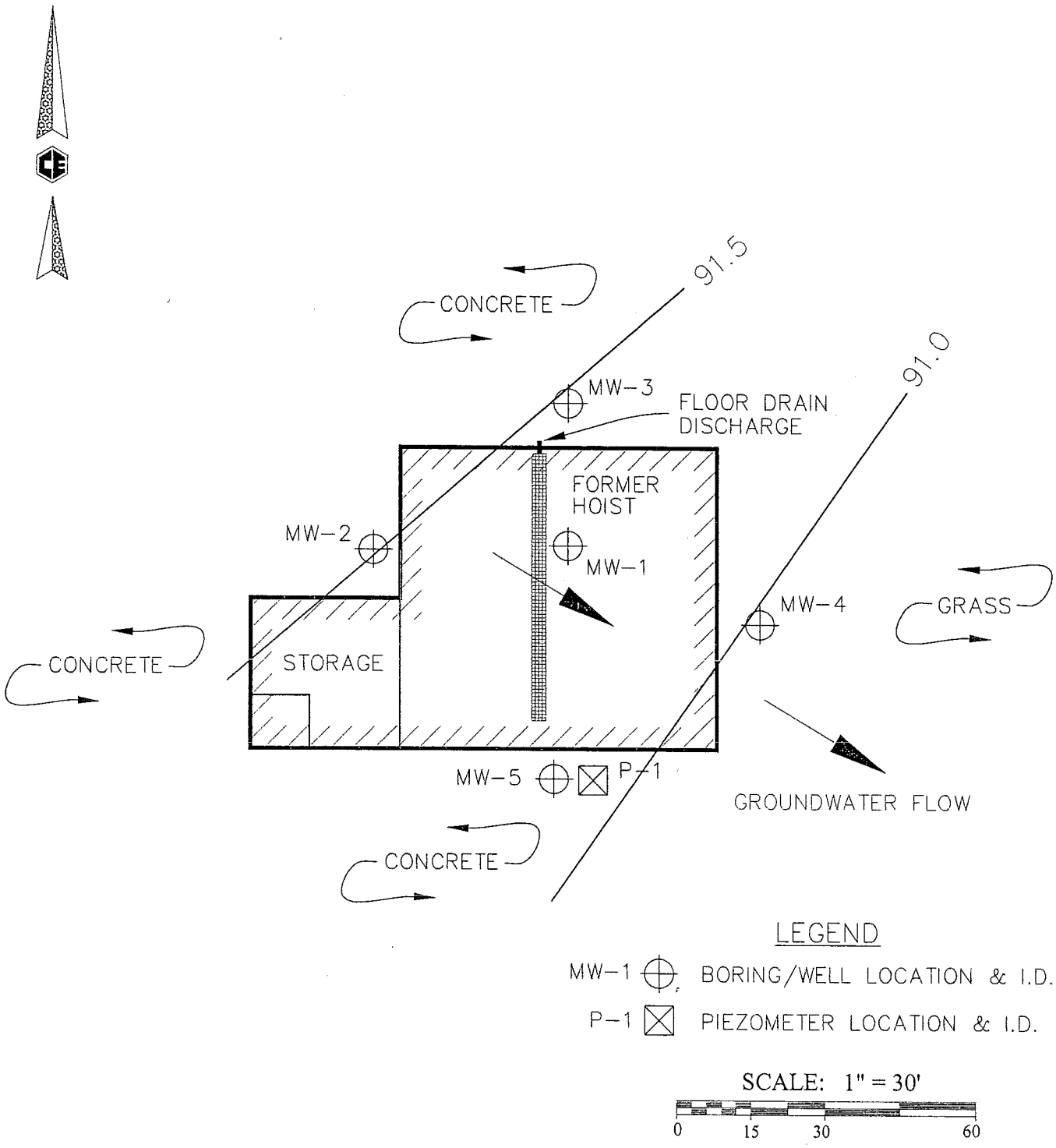

FIGURE 9
GROUNDWATER FLOW DIRECTION DRAWING
GILLETT CEMENT PRODUCTS - GILLETT, WISCONSIN
MAINTENANCE BUILDING SITE BRRTS #02-43-543304

COLEMAN ENGINEERING COMPANY
635 CIRCLE DRIVE
IRON MOUNTAIN, MICHIGAN 49801

DATE 7/14/09
JOB NO 05018-N
CADD FILE 05018-N-GILLETT_MAINT

TABLE 2
Post Remediation Soil Analytical Results
Gillett Cement Products
WDNR BRRTS No. 02-43-543304

			Concentration µg/Kg							
Sample ID	**Sample Depth**	**Sample Date**	**Benzene**	**1,2-Dichloroethane**	**Ethylbenzene**	**Methyl-tert-butyl-ether**	**Toluene**	**1,2,4-Trimethyl benzene**	**1,3,5-Trimethyl benzene**	**Total Xylenes**
Gillett-Hoist	5.0 ft.	9/8/2005	<19	<18	<18	<21	<20	<23	<21	<46
NR 720 RCL			**5.5**	**4.9**	**2,900**	**NS**	**1,500**	**NS**	**NS**	**4,100**

TABLE 3
Summary of Groundwater Analytical Results-VOCs
Gillett Cement Products
Manintenance Building Site
WDNR BRRTS No. 02-43-543304

Sample ID	Sample Date	Benzene	n-Butyl benzene	sec-Butyl benzene	Chloro-methane	cis-1,2-Dichloro-ethene	Ethyl benzene	Isopropyl benzene	p-Isopropyl toluene	Methyl-tert-butyl ether	Methylene Chloride	Naphthalene	n-Propyl benzene	Tetrachloro ethene	Toluene	Trichloro ethene	Total Trimethyl benzene	Total Xylenes
TW500	6/17/2005	<0.26	<0.61	<0.25	<1.1	<0.27	<0.3	<0.56	<0.5	<0.36	<0.55	<0.85	<0.56	0.45 J	0.99 J	<0.37	<1.15	<1.17
TW600	6/17/2005	<0.26	2.5	1.9	<1.1	2.2	<0.3	0.7 J	1.51 J	<0.36	<0.55	4.1	1.57 J	<0.45	<0.52	**1.4**	13	0.82 J
MW-1	9/16/2005	<0.41	<0.93	<0.89	<0.24	1.2 Q	<0.54	<0.59	<0.67	<0.61	0.59 Q	<0.74	<0.81	**0.61 Q**	<0.67	<0.48	<1.8	<2.63
MW-1	2/27/2006	<1.4	<1.5	<1.4	<1.7	<1.8	<1.7	<1.4	<1.3	<2.0	4.2 Q	<2.5	<1.5	**2.0 Q**	<2.5	<1.3	<3.1	<5.7
MW-1	6/1/2006	<0.21	<0.16	<0.19	**0.83 J**	0.82 J	<0.20	<0.19	<0.20	<0.20	<0.30	<0.31	<0.17	**1.6**	<0.17	0.28 J	<0.37	<0.41
MW-1	11/7/2006	**0.51J**	<0.16	<0.19	<0.16	4.4	0.40J	<0.19	<0.20	<0.20	<0.30	<0.31	<0.17	**0.75**	2.1	0.49J	0.8	1.77
MW-1	6/6/2007	<0.11	<0.20	<0.21	<0.47	1.3J	<0.20	<0.12	<0.22	<0.14	<0.40	<0.31	<0.28	<0.26	<0.24	<0.38	<0.54	<0.42
MW-1	10/29/2007	<0.11	<0.20	<0.21	<0.47	15	<0.20	<0.12	0.63J	<0.14	<0.40	1.2	<0.28	0.30J	0.33J	<0.38	0.61J	<0.42
MW-1	6/10/2008	*	*	*	*	*	*	*	*	*	*	*	*	**60**	*	*	*	*
MW-1	6/4/2009	<0.20	<0.20	<0.20	<0.23	2.5	<0.20	<0.12	<0.19	<0.14	<0.40	<0.41	<0.28	**1.6**	>0.17	**0.95**	<0.21	<0.42
MW-2	9/16/2005	<0.41	<0.93	<0.89	<0.24	<0.83	<0.54	<0.59	<0.67	<0.61	<0.43	<0.74	<0.81	**29**	<0.67	<0.48	<1.8	<2.63
MW-2	2/27/2006	<0.14	<0.15	<0.14	<0.17	<0.18	<0.17	<0.14	<0.13	<0.20	<0.25	<0.25	<0.15	**50**	<0.25	<0.13	<0.31	<0.57
MW-2	6/1/2006	<1.0	<0.82	<0.94	<1.2	<1.7	<1.0	<0.97	<0.99	<1.0	<1.5	<1.6	<0.85	**70**	<0.85	<0.93	<1.99	<3.1
MW-2	11/7/2006	<1.0	<0.82	<0.94	<1.2	<1.7	<1.0	<0.97	<0.99	<1.0	<1.5	<1.6	<0.85	**83**	<0.85	<0.93	<1.99	<3.1
MW-2	6/6/2007	<0.53	<1.0	<1.0	<2.4	<1.3	<0.99	<0.58	<1.1	<0.69	<2.0	<1.6	<1.4	**98**	<1.2	<1.9	<2.7	<2.1
MW-2	10/29/2007	<0.21	<0.23	<0.24	<0.15	<0.21	<0.23	<0.21	<0.23	<0.12	<0.40	<0.25	<0.23	**110**	<0.20	<0.20	<0.46	<0.43
MW-2	3/10/2008	*	*	*	*	*	*	*	*	*	*	*	*	**58**	*	*	*	*
MW-2	6/10/2008	*	*	*	*	*	*	*	*	*	*	*	*	**73**	*	*	*	*
MW-2	6/4/2009	<0.11	<0.20	<0.21	<0.47	<0.20	<0.20	<0.12	<0.95	<1.4	<2.4	<2.0	<1.1	**56**	<0.86	<0.84	<0.98	<0.42
MW-3	9/16/2005	<0.41	<0.93	<0.89	<0.24	<0.83	<0.54	<0.59	<0.67	<0.61	<0.43	<0.74	<0.81	<0.45	<0.67	<0.48	<1.8	<2.63
MW-3	2/27/2006	<0.14	<0.15	<0.14	<0.17	<0.18	<0.17	<0.14	<0.13	<0.20	0.29 Q	<0.25	<0.15	<0.18	<0.25	<0.13	<0.31	<0.57
MW-3	6/1/2006	<0.21	<0.16	<0.19	<0.24	<0.34	<0.20	<0.19	<0.20	<0.20	<0.30	<0.31	<0.17	<0.16	<0.17	<0.19	<0.40	<0.62
MW-3	11/7/2006	<0.21	<0.16	<0.19	<0.24	<0.34	<0.20	<0.19	<0.20	<0.20	<0.30	<0.31	<0.17	<0.16	<0.17	<0.19	<0.40	<0.62
MW-3	6/6/2007	<0.19	<0.23	<0.18	<0.30	<0.18	<0.14	<0.17	<0.20	<0.22	<0.40	<0.37	<0.18	<0.13	<0.17	<0.19	<0.36	<0.29
MW-3	6/10/2008	*	*	*	*	*	*	*	*	*	*	*	*	<0.31	*	*	*	*
MW-3	6/4/2009	<0.11	<0.20	<0.21	<0.47	<0.20	<0.20	<0.12	<0.19	<0.14	<0.40	<0.41	<0.28	<0.21	>0.17	<0.38	<0.21	<0.42
MW-4	9/16/2005	<0.41	<0.93	<0.89	<0.24	<0.83	<0.54	<0.59	<0.67	<0.61	<0.43	<0.74	<0.81	<0.45	<0.67	<0.48	<1.8	<2.63
MW-4	2/27/2006	<1.4	<1.5	<1.4	<1.7	<1.8	<1.7	<1.4	<1.3	<2.0	4.7 Q	<2.5	<1.5	<1.8	<2.5	<1.3	<3.1	<5.7
MW-4	6/1/2006	<0.21	<0.16	<0.19	<0.24	<0.34	<0.20	<0.19	<0.20	<0.20	<0.30	<0.31	<0.17	<0.16	<0.17	<0.19	<0.40	<0.62
MW-4	11/7/2006	<0.21	<0.16	<0.19	<0.24	<0.34	<0.20	<0.19	<0.20	<0.20	<0.30	<0.31	<0.17	<0.16	<0.17	<0.19	<0.40	<0.62
MW-4	6/6/2007	<0.19	<0.23	<0.18	<0.30	<0.18	<0.14	<0.17	<0.20	<0.22	<0.40	<0.37	<0.18	<0.13	<0.17	<0.19	<0.36	<0.29
MW-4	10/29/2007	<0.21	<0.23	<0.24	<0.15	0.31J	<0.23	<0.21	<0.23	<0.12	<0.40	<0.25	<0.23	<0.21	<0.20	<0.20	<0.46	<0.43
MW-4	6/10/2008	*	*	*	*	*	*	*	*	*	*	*	*	<0.31	*	*	*	*
MW-4	6/4/2009	<0.11	<0.20	<0.21	<0.47	<0.20	<0.20	<0.12	<0.19	<0.14	<0.40	<0.41	<0.28	<0.21	>0.17	<0.38	<0.21	<0.42

TABLE 3
Summary of Groundwater Analytical Results-VOCs
Gillett Cement Products
Manintenance Building Site
WDNR BRRTS No. 02-43-543304

Sample ID	Sample Date	Benzene	n-Butyl benzene	sec-Butyl benzene	Chloro-methane	cis-1,2-Dichloro-ethene	Ethyl benzene	Isopropyl benzene	p-Isopropyl toluene	Methyl-tert-butyl ether	Methylene Chloride	Naphthalene	n-Propyl benzene	Tetrachloro ethene	Toluene	Trichloro ethene	Total Trimethyl benzene	Total Xylenes
MW-5	9/16/2005	<0.41	<0.93	<0.89	<0.24	<0.83	<0.54	<0.59	<0.67	<0.61	<0.43	<0.74	<0.81	<0.45	<0.67	<0.48	<1.8	<2.63
MW-5	2/27/2006	<1.4	<1.5	<1.4	<1.7	<1.8	<1.7	<1.4	<1.3	<2.0	4.6 Q	<2.5	<1.5	<1.8	<2.5	<1.3	<3.1	<5.7
MW-5	6/1/2006	<0.21	<0.16	<0.19	<0.24	0.52 J	<0.20	<0.19	<0.20	<0.20	<0.30	<0.31	<0.17	<0.16	<0.17	<0.19	<0.40	<0.62
MW-5	11/7/2006	<0.21	<0.16	<0.19	<0.24	0.52 J	<0.20	<0.19	<0.20	<0.20	<0.30	<0.31	<0.17	<0.16	<0.17	0.23J	<0.40	<0.62
MW-5	6/6/2007	<0.19	<0.23	<0.18	<0.30	0.59J	<0.14	<0.17	<0.20	<0.22	<0.40	<0.37	<0.18	<0.13	<0.17	<0.19	<0.36	<0.29
MW-5	10/29/2007	<0.21	<0.23	<0.24	<0.15	<0.21	<0.23	<0.21	<0.23	<0.12	<0.40	<0.25	<0.23	<0.21	<0.20	0.20J	<0.46	<0.43
MW-5	6/10/2008	*	*	*	*	*	*	*	*	*	*	*	*	<0.31	*	*	*	*
MW-5	6/4/2009	<0.11	<0.20	<0.21	<0.47	0.43	<0.20	<0.12	<0.19	<0.14	<0.40	<0.41	<0.28	<0.21	>0.17	<0.38	<0.21	<0.42
MW-6	11/7/2006	<0.21	<0.16	<0.19	<0.24	0.52 J	<0.20	<0.19	<0.20	<0.20	<0.30	<0.31	<0.17	<0.16	<0.17	<0.19	<0.40	<0.62
P-1	9/16/2005	<0.41	<0.93	<0.89	<0.24	<0.83	<0.54	<0.59	<0.67	<0.61	0.65 Q	<0.74	<0.81	<0.45	<0.67	<0.48	<1.8	<2.63
P-1	2/27/2006	<0.14	<0.15	<0.14	<0.17	<0.18	<0.17	<0.14	<0.13	<0.20	<0.25	<0.25	<0.15	<0.18	<0.25	<0.13	<0.31	<0.57
P-1	6/1/2006	<0.21	<0.16	<0.19	0.68 J	<0.34	<0.20	<0.19	<0.20	<0.20	<0.30	<0.31	<0.17	<0.16	<0.17	<0.19	<0.40	<0.62
P-1	11/7/2006	<0.14	<0.15	<0.14	<0.17	<0.18	<0.17	<0.14	<0.13	<0.20	<0.25	<0.25	<0.15	<0.18	<0.25	<0.13	<0.31	<0.57
P-1	6/6/2007	<0.19	<0.23	<0.18	<0.30	<0.18	<0.14	<0.17	<0.20	<0.22	<0.40	<0.37	<0.18	<0.13	<0.17	<0.19	<0.19	<0.22
P-1	10/29/2007	<0.21	<0.23	<0.24	<0.15	<0.21	<0.23	<0.21	<0.23	<0.12	<0.40	<0.25	<0.23	<0.21	<0.20	<0.20	<0.46	<0.43
P-1	6/10/2008	*	*	*	*	*	*	*	*	*	*	*	*	<0.31	*	*	*	*
P-1	6/4/2009	<0.11	<0.20	<0.21	<0.47	2.5	<0.20	<0.12	<0.19	<0.14	<0.40	<0.41	<0.28	<0.21	>0.17	<0.38	<0.21	<0.42
P-2	11/7/2006	<0.14	<0.15	<0.14	<0.17	<0.18	<0.17	<0.14	<0.13	<0.20	<0.25	<0.25	<0.15	<0.18	<0.25	<0.13	<0.31	<0.57
P-2	6/6/2007	<0.19	<0.23	<0.18	<0.30	<0.18	<0.14	<0.17	<0.20	<0.22	<0.40	<0.37	<0.18	<0.13	<0.17	<0.19	<0.36	<0.29
P-2	10/29/2007	<0.21	<0.23	<0.24	<0.15	<0.21	<0.23	<0.21	<0.23	<0.12	<0.40	<0.25	<0.23	0.43J	<0.20	<0.20	<0.46	<0.43
P-2	6/10/2008	*	*	*	*	*	*	*	*	*	*	*	*	**1.2**	*	*	*	*
P-2	6/4/2009	<0.11	<0.20	<0.21	<0.47	<0.21	<0.20	<0.12	<0.19	<0.14	<0.40	<0.41	<0.28	**1.6**	>0.17	<0.38	<0.21	<0.42
Building Well	6/4/2009	<0.20	<0.18	<0.26	<0.23	<0.20	<0.21	<0.22	<0.19	<0.28	<0.48	<0.41	<0.21	<0.21	<0.17	<0.17	<0.20	<0.33
House Well	11/7/2006	<0.20	<0.25	<0.30	<0.20	<0.20	<0.19	<0.18	NA	<0.38	<0.36	<0.38	<0.19	<0.16	<0.19	<0.17	<0.31	<0.38
	PAL	**0.5**	**NS**	**NS**	**0.3**	**7.0**	**140**	**NS**	**NS**	**12**	**NS**	**8.0**	**NS**	**0.5**	**200**	**0.5**	**96**	**1,000**
	ES	**5.0**	**NS**	**NS**	**3.0**	**70**	**700**	**NS**	**NS**	**60**	**NS**	**40**	**NS**	**5.0**	**1,000**	**5.0**	**480**	**10,000**

Notes:

Only compounds with concentrations above LOD are in table

PAL = Preventive Action Limit as defined in Chapter NR 140

ES = Enforcement Standard as defined in Chapter NR 140

< = Results are less than the LOD.

Bolded results exceed PAL/ES.

NS = No Chapter NR 140 standard.

* = Not analyzed or no data available.

Laboratory Footnotes:

LOD = Limit of Detection

LOQ = Limit of Quantification

B = The analyte has been detected between the method detection limit and the reporting limit.

J = Analyte detected between LOD and LOQ.

Q = The analyte has been detected between the limit of detection (LOD) and the limit of quantification (LOQ). The results are qualified due to the uncertainty of the analyte concentrations within this range.

Z = This compound was separated but it did not meet the resolution criteria as set forth in SW846.

TABLE 3
Summary of Groundwater Analytical Results-PAH
Gillett Cement Products
Maintenance Building Site
WDNR BRRTS No. 02-43-543304

Sample ID	Sample Date	Acenaphthene	Acenaphthylene	Anthracene	Benzo(a) anthracene	Benzo(a) pyrene	Benzo(b) fluoranthene	Benzo(ghi) perylene	Benzo(k) fluoranthene	Chrysene	Dibenzo(ah) anthracene	Fluoranthene	Fluorene	Indeno(123-cd) pyrene	1-Methyl naphthalene	2-Methyl naphthalene	Naphthalene	Phenanthrene	Pyrene
TW500	6/17/2005	<0.016	0.014 J	0.034 J	<0.012	<0.008	<0.009	<0.01	<0.009	<0.011	<0.009	<0.011	0.047	<0.015	<0.018	<0.021	0.033 J	0.023 J	0.05
TW600	6/17/2005	2.4	1.4	0.51 J	<0.24	<0.16	**0.45 J**	<0.2	<0.18	**0.42 J**	<0.18	0.86	4.9	<0.3	47	53	4.0	8.9	2.5
MW-1	9/16/2005	0.035 Q	0.035 Q	0.039 Q	0.043 Q	**0.057 Q**	**0.042 QZ**	0.17	<0.043 Z	**0.047 Q**	<0.042	0.079 Q	0.17	<0.042	0.28 Q	<0.11	<0.11	0.16	0.17
MW-1	2/27/2006	0.17	0.031 Q	<0.023	<0.027	<0.018	<0.027	<0.029	<0.034	<0.027	<0.033	<0.027	0.20	<0.034	1.4	0.029 Q	0.14	0.073 Q	<0.025
MW-2	9/16/2005	*	*	*	*	*	*	*	*	*	*	*	*	*	*	*	*	*	*
MW-2	2/27/2006	<0.027	<0.027	<0.023	<0.027	<0.018	<0.027	<0.029	<0.034	<0.027	<0.033	<0.027	<0.026	<0.034	<0.021	<0.024	<0.023	<0.024	<0.025
MW-3	9/16/2005	0.010 Q	0.032	0.067	0.11	**0.094**	**0.10 Z**	0.069	0.077 Z	**0.11**	0.021 Q	0.23	0.045	0.061	<0.047	<0.047	0.16 B	0.22	0.18
MW-3	2/27/2006	<0.027	<0.027	<0.023	<0.027	<0.018	<0.027	<0.029	<0.034	<0.027	<0.033	<0.027	<0.026	<0.034	<0.021	<0.024	<0.023	<0.024	<0.025
MW-4	9/16/2005	<0.0086	<0.0086	<0.012	<0.017	<0.019	<0.017 Z	<0.020	<0.020 Z	<0.020	<0.020	<0.016	0.017 Q	<0.020	<0.050	<0.050	0.18 B	0.041	<0.015
MW-4	2/27/2006	<0.027	<0.027	<0.023	<0.027	<0.018	<0.027	<0.029	<0.034	<0.027	<0.033	<0.027	<0.026	<0.034	<0.021	<0.024	<0.023	<0.024	<0.025
MW-5	9/16/2005	0.078 Q	0.25	0.25	0.68	**0.58**	**0.61 Z**	0.40	0.51 Z	**0.66**	0.12 Q	1.8	0.29	0.35	<0.24	<0.24	<0.24	1.8	1.2
MW-5	2/27/2006	<0.027	<0.027	<0.023	<0.027	<0.018	<0.027	<0.029	<0.034	<0.027	<0.033	0.082 Q	0.035 Q	<0.034	<0.021	<0.024	<0.023	0.057 Q	0.058 Q
P-1	9/16/2005	<0.0091	0.043	0.056	0.15	**0.13**	**0.14 Z**	0.091	0.12 Z	**0.14**	0.026 Q	0.39	0.031 Q	0.083	<0.053	<0.053	<0.053	0.27	0.27
P-1	2/27/2006	<0.027	<0.027	<0.023	<0.027	<0.018	<0.027	<0.029	<0.034	<0.027	<0.033	0.048 Q	<0.026	<0.034	<0.021	<0.024	<0.023	0.030 Q	0.038 Q
	PAL	**NS**	**NS**	**600**	**NS**	**0.02**	**0.02**	**NS**	**NS**	**0.02**	**NS**	**80**	**80**	**NS**	**NS**	**NS**	**8.0**	**NS**	**50**
	ES	**NS**	**NS**	**3,000**	**NS**	**0.2**	**0.2**	**NS**	**NS**	**0.2**	**NS**	**400**	**400**	**NS**	**NS**	**NS**	**40**	**NS**	**250**

Notes:

PAL = Preventive Action Limit as defined in Chapter NR 140

ES = Enforcement Standard as defined in Chapter NR 140

< = Results are less than the LOD.

Bolded results exceed PAL/ES.

NS = No Chapter NR 140 standard.

* = Not analyzed or no data available.

Laboratory Footnotes:

LOD = Limit of Detection

LOQ = Limit of Quantification

B = The analyte has been detected between the method detection limit and the reporting limit.

J = Analyte detected between LOD and LOQ.

Q = The analyte has been detected between the limit of detection (LOD) and the limit of quantification (LOQ). The results are qualified due to the uncertainty of the analyte concentrations within this range.

Z = This compound was separated but it did not meet the resolution criteria as set forth in SW846.

Table 4
Groundwater Elevations
Gillett Cement Products
BRRTS 302-43-543304

Well	T/PVC	B/PVC	T/SCREEN	GROUNDWATER ELEVATION					
				9/16/2005	11/7/2006	6/5/2007	11/29/2007	6/10/2008	6/4/2009
MW-1	99.40	87.10	92.10	91.20	93.24	93.20	92.40	94.41	94.37
MW-2	99.58	89.58	94.58	91.56	93.59	93.63	92.69	94.85	94.59
MW-3	99.86	88.96	93.96	91.48	93.47	93.61	92.73	94.41	94.76
MW-4	101.10	87.35	92.35	90.89	93.11	93.20	91.76	95.19	94.31
MW-5	97.88	87.03	92.07	91.24	93.18	93.17	92.32	94.23	94.15
MW-6	99.23	89.00	94.00	na	94.16	na	na	na	na
P-1	97.78	75.08	77.08	91.17	na	95.63	93.78	95.77	95.20
P-2	99.49	70.99	72.99	na	95.34	95.61	94.16	94.50	95.62

all elevation referenced to on-site benchmark of 100.00
na-not available
T/PVC-to of pvc pipe
B/PVC-bottom of pvc pipe
T/SCREEN-top of screen