# GIS REGISTRY
## Cover Sheet

March, 2010
(RR 5367)

## Source Property Information

CLOSURE DATE: Feb 7, 2001

**BRRTS #:** **03-05-000326**

FID #:

ACTIVITY NAME: Parsons/Wied Property

DATCP #:

PROPERTY ADDRESS: 13394 Velp Ave

COMM #: 54313804494A

MUNICIPALITY: Suamico

PARCEL ID #: SU-434-2-1

***WTM COORDINATES:**

X: **674533** Y: **464155**

** Coordinates are in WTM83, NAD83 (1991)*

**WTM COORDINATES REPRESENT:**

- (●) Approximate Center Of Contaminant Source
- ( ) Approximate Source Parcel Center

**Please check as appropriate:** (BRRTS Action Code)

### Contaminated Media:

- [x] Groundwater Contamination > ES *(236)*
  - [ ] Contamination in ROW
  - [ ] Off-Source Contamination

  (***note:*** *for list of off-source properties see "Impacted Off-Source Property" form)*

- [ ] Soil Contamination > *RCL or **SSRCL *(232)*
  - [ ] Contamination in ROW
  - [ ] Off-Source Contamination

  (***note:*** *for list of off-source properties see "Impacted Off-Source Property" form)*

### Land Use Controls:

- [x] N/A (*Not Applicable*)
- [ ] Soil: maintain industrial zoning *(220)*

  (***note:*** *soil contamination concentrations between non-industrial and industrial levels)*
- [ ] Structural Impediment *(224)*
- [ ] Site Specific Condition *(228)*
- [ ] Cover or Barrier *(222)*

  (***note:*** *maintenance plan for groundwater or direct contact)*
- [ ] Vapor Mitigation *(226)*
- [ ] Maintain Liability Exemption *(230)*

  (***note:*** *local government unit or economic development corporation was directed to take a response action )*

### Monitoring Wells:

Are all monitoring wells properly abandoned per NR 141? *(234)*

(●) Yes ( ) No ( ) N/A

** Residual Contaminant Level*
***Site Specific Residual Contaminant Level*

# GIS Registry Checklist



This Adobe Fillable form is intended to provide a list of information that is required for evaluation for case closure. It is to be used in conjunction with Form 4400-202, Case Closure Request. The closure of a case means that the Department has determined that no further response is required at that time based on the information that has been submitted to the Department.

**NOTICE: Completion of this form is mandatory** for applications for case closure pursuant to ch. 292, Wis. Stats. and ch. NR 726, Wis. Adm. Code, including cases closed under ch. NR 746 and ch. NR 726. The Department will not consider, or act upon your application, unless all applicable sections are completed on this form and the closure fee and any other applicable fees, required under ch. NR 749, Wis. Adm. Code, Table 1 are included. It is not the Department's intention to use any personally identifiable information from this form for any purpose other than reviewing closure requests and determining the need for additional response action. The Department may provide this information to requesters as required by Wisconsin's Open Records law [ss. 19.31 - 19.39, Wis. Stats.].

BRRTS #: 03-05-000326 PARCEL ID #: SU-434-2-1

ACTIVITY NAME: Parsons/Wied Property WTM COORDINATES: X: 674533 Y: 464155

## CLOSURE DOCUMENTS (the Department adds these items to the final GIS packet for posting on the Registry)

- [x] **Closure Letter**
- [ ] **Maintenance Plan** (*if activity is closed with a land use limitation or condition (land use control) under s. 292.12, Wis. Stats.*)
- [ ] **Continuing Obligation Cover Letter** (for property owners affected by residual contamination and/or continuing obligations)
- [ ] **Conditional Closure Letter**
- [ ] **Certificate of Completion (COC)** (for VPLE sites)

## SOURCE LEGAL DOCUMENTS

- [x] **Deed:** The most recent deed as well as legal descriptions, for the **Source Property** (where the contamination originated). Deeds for other, off-source (off-site) properties are located in the **Notification** section.
  ***Note:*** *If a property has been purchased with a land contract and the purchaser has not yet received a deed, a copy of the land contract which includes the legal description shall be submitted instead of the most recent deed. If the property has been inherited, written documentation of the property transfer should be submitted along with the most recent deed.*
- [ ] **Certified Survey Map:** A copy of the certified survey map or the relevant section of the recorded plat map *for those properties where the legal description in the most recent deed refers to a certified survey map or a recorded plat map.* (lots on subdivided or platted property (e.g. lot 2 of xyz subdivision)).

  **Figure #:** **Title:**
- [ ] **Signed Statement:** A statement signed by the Responsible Party (RP), which states that he or she believes that the attached legal description accurately describes the correct contaminated property.

## MAPS (meeting the visual aid requirements of s. NR 716.15(2)(h))

Maps must be no larger than 11 x 17 inches unless the map is submitted electronically.

- [x] **Location Map:** A map outlining all properties within the contaminated site boundaries on a U.S.G.S. topographic map or plat map in sufficient detail to permit easy location of all parcels. If groundwater standards are exceeded, include the location of all potable wells within 1200 feet of the site.
  ***Note:*** *Due to security reasons municipal wells are not identified on GIS Packet maps. However, the locations of these municipal wells must be identified on Case Closure Request maps.*

  **Figure #: 1** **Title: Location Map**
- [x] **Detailed Site Map:** A map that shows all relevant features (buildings, roads, individual property boundaries, contaminant sources, utility lines, monitoring wells and potable wells) within the contaminated area. This map is to show the location of all contaminated public streets, and highway and railroad rights-of-way in relation to the source property and in relation to the boundaries of groundwater contamination exceeding a ch. NR 140 Enforcement Standard (ES), and/or in relation to the boundaries of soil contamination exceeding a Residual Contaminant Level (RCL) or a Site Specific Residual Contaminant Levels (SSRCL) as determined under s. NR 720.09, 720.11 and 720.19.

  **Figure #: 3** **Title: Remedial Excavation Map**
- [ ] **Soil Contamination Contour Map:** For sites closing with residual soil contamination, this map is to show the location of all contaminated soil and a single contour showing the horizontal extent of each area of contiguous residual soil contamination that exceeds a Residual Contaminant Level (RCL) or a Site Specific Residual Contaminant Level (SSRCL)as determined under s. NR 720.09, 720.11 and 720.19.

  **Figure #:** **Title:**

BRRTS #: 03-05-000326 ACTIVITY NAME: Parsons/Wied Property

## MAPS (continued)

☒ **Geologic Cross-Section Map:** A map showing the source location and vertical extent of residual soil contamination exceeding a Residual Contaminant Level (RCL) or a Site Specific Residual Contaminant Level (SSRCL). If groundwater contamination exceeds a ch. NR 140 Enforcement Standard (ES) when closure is requested, show the source location and vertical extent, water table and piezometric elevations, and locations and elevations of geologic units, bedrock and confining units, if any.

**Figure #:** **Title: Post-Remedial Geologic Cross-Section A-A'**

**Figure #:** **Title: Post-Remedial Geologic Cross-Section B-B'**

☐ **Groundwater Isoconcentration Map:** For sites closing with residual groundwater contamination, this map shows the horizontal extent of all groundwater contamination exceeding a ch. NR140 Preventive Action Limit (PAL) and an Enforcement Standard (ES). Indicate the direction and date of groundwater flow, based on the most recent sampling data.
***Note:*** *This is intended to show the total area of contaminated groundwater.*

**Figure #:** **Title:**

☒ **Groundwater Flow Direction Map:** A map that represents groundwater movement at the site. If the flow direction varies by more then 20° over the history of the site, submit 2 groundwater flow maps showing the maximum variation in flow direction.

**Figure #: 21** **Title: Groundwater Contour & Oxygen Distribution 7/24/98**

**Figure #:** **Title:**

## TABLES (meeting the requirements of s. NR 716.15(2)(h)(3))

Tables must be no larger than 11 x 17 inches unless the table is submitted electronically. Tables must not contain shading and/or cross-hatching. The use of **BOLD** or *ITALICS* is acceptable.

☐ **Soil Analytical Table:** A table showing remaining soil contamination with analytical results and collection dates.
**Note:** This is one table of results for the contaminants of concern. Contaminants of concern are those that were found during the site investigation, that remain after remediation. It may be necessary to create a new table to meet this requirement.

**Table #:** **Title:**

☒ **Groundwater Analytical Table:** Table(s) that show the most recent analytical results and collection dates, for all monitoring wells and any potable wells for which samples have been collected.

**Table #: 7-15** **Title: Laboratory Analysis Groundwater**

☐ **Water Level Elevations:** Table(s) that show the previous four (at minimum) water level elevation measurements/dates from all monitoring wells. If present, free product is to be noted on the table.

**Table #:** **Title:**

## IMPROPERLY ABANDONED MONITORING WELLS

For each monitoring well not properly abandoned according to requirements of s. NR 141.25 include the following documents.
***Note:*** *If the site is being listed on the GIS Registry for only an improperly abandoned monitoring well you will only need to submit the documents in this section for the GIS Registry Packet.*

☒ **Not Applicable**

☐ **Site Location Map:** A map showing all surveyed monitoring wells with specific identification of the monitoring wells which have not been properly abandoned.
***Note:*** *If the applicable monitoring wells are distinctly identified on the Detailed Site Map this Site Location Map is not needed.*

**Figure #:** **Title:**

☐ **Well Construction Report:** Form 4440-113A for the applicable monitoring wells.

☐ **Deed:** The most recent deed as well as legal descriptions for each property where a monitoring well was not properly abandoned.

☐ **Notification Letter:** Copy of the notification letter to the affected property owner(s).

BRRTS #: 03-05-000326 ACTIVITY NAME: Parsons/Wied Property

## NOTIFICATIONS

**Source Property**

☒ **Not Applicable**

☐ **Letter To Current Source Property Owner:** If the source property is owned by someone other than the person who is applying for case closure, include a copy of the letter notifying the current owner of the source property that case closure has been requested.

☐ **Return Receipt/Signature Confirmation:** Written proof of date on which confirmation was received for notifying current source property owner.

**Off-Source Property**

Group the following information per individual property and label each group according to alphabetic listing on the "Impacted Off-Source Property" attachment.

☒ **Not Applicable**

☐ **Letter To "Off-Source" Property Owners:** Copies of all letters sent by the Responsible Party (RP) to owners of properties with groundwater exceeding an Enforcement Standard (ES), and to owners of properties that will be affected by a land use control under s. 292.12, Wis. Stats.
***Note:*** *Letters sent to off-source properties regarding residual contamination must contain standard provisions in Appendix A of ch. NR 726.*

**Number of "Off-Source" Letters:**

☐ **Return Receipt/Signature Confirmation:** Written proof of date on which confirmation was received for notifying any off-source property owner.

☐ **Deed of "Off-Source" Property:** The most recent deed(s) as well as legal descriptions, for all affected deeded **off-source property(ies).** This does not apply to right-of-ways.
***Note:*** *If a property has been purchased with a land contract and the purchaser has not yet received a deed, a copy of the land contract which includes the legal description shall be submitted instead of the most recent deed. If the property has been inherited, written documentation of the property transfer should be submitted along with the most recent deed.*

☐ **Letter To "Governmental Unit/Right-Of-Way" Owners:** Copies of all letters sent by the Responsible Party (RP) to a city, village, municipality, state agency or any other entity responsible for maintenance of a public street, highway, or railroad right-of-way, within or partially within the contaminated area, for contamination exceeding a groundwater Enforcement Standard (ES) and/or soil exceeding a Residual Contaminant Level (RCL) or a Site Specific Residual Contaminant Level (SSRCL).

**Number of "Governmental Unit/Right-Of-Way Owner" Letters:**

State of Wisconsin \ DEPARTMENT OF NATURAL RESOURCES

Scott McCallum, Governor
Darrell Bazzell, Secretary
Ronald W. Kazmierczak, Regional Director

Northeast Region Headquarters
1125 N. Military Ave., P.O. Box 10448
Green Bay, Wisconsin 54307-0448
Telephone 920-492-5800
FAX 920-492-5913
TTY 920-492-5912

February 9, 2001

Thomas A. Wied
P.O. Box 8933
Green Bay, WI 54308

SUBJECT: Case closure with a groundwater use restriction for the Parsons/Wied Property, 13394 Velp Avenue, Suamico, WI
**WDNR BRRTS # 03-05-000326**

Dear Mr. Wied:

On March 9, 1999, your request for closure of the case described above was reviewed by the Wisconsin Department of Natural Resources Northeast Region Closure Committee. This committee reviews environmental remediation cases for compliance with state rules and statutes to maintain consistency in the closure of these cases. After careful review of the closure request, it appears at this time the site has been investigated and remediated to the extent practicable under current site conditions and that the conditions of closure (filing of a groundwater use restriction & monitoring well abandonment) have been met. Your case has been closed under s. NR 726.05, Wis. Adm. Code on February 7, 2001.

Please be aware that the case may be reopened pursuant to s. NR 726.09, Wis. Adm. Code, if additional information regarding site conditions indicates that contamination on or from the site poses a threat to public health, safety, or welfare or to the environment.

We appreciate your efforts to restore the environment at this site. If you have any questions regarding this letter, please contact me in Green Bay at (920) 492-5921.

Sincerely,

Keld B. Lauridsen
Hydrogeologist
Remediation & Redevelopment Program

cc: Charles A. Parsons,
2151 Packerland Drive, Green Bay, WI 54304
Karl Schuldes, Robert E. Lee & Associates,
2825 South Webster Avenue, P.O. 2100, Green Bay, WI 54306-2100

1790357

Document Number | GROUNDWATER USE RESTRICTION

BROWN COUNTY
REGISTER OF DEEDS
CATHY WILLIQUETTE

2001 JAN 16 P 3:45

Recording Area 12 (2)

Name and Return Address

Mr. Thomas A. Wied
P.O. Box 8933
Green Bay, WI 54308-8933

Parcel Identification Number (PIN)

Grantor: Charles A. Parsons
Grantee: Thomas A WIED

## Declaration of Restrictions

In re: A parcel of land located in the Northeast Quarter of the Northeast Quarter (NE ¼ of NE ¼) of Section Twenty-Two (22), Township Twenty-Five (25) North, Range Twenty (20) East, in the town of Suamico, Brown County, Wisconsin, described as follows: Commencing at the intersection of the centerline of U.S. Highway 41 and 141 with the North line of said Section 22, said point of intersection being 622 feet west of the northeast corner of said Section 22, and being marked by a cross on the centerline of the existing 22 foot concrete pavement; thence S. 32 degrees 52' W along the centerline of said Highway 41 and 141, 201.24 feet; thence S 68 degrees 37' E 156.99 feet to a 1" iron rod; thence N 21 degrees 56' E 249.5 feet to the north line of said Section 22; thence S. 87 degrees 44' W 130.25 feet to the point of commencement; except the southerly thirty-five (35) feet of the above described tract of land excepting therefrom any parts thereof used for highway purposes. As described in Sheriff's Deed (Jacket 14307 Image 15) Brown County Register of Deeds. Tax Parcel NO. SU-434-2-1.

STATE OF WISCONSIN )
) ss
COUNTY OF BROWN )

WHEREAS, Thomas A. Wied, is the owner of the above-described property.

WHEREAS, one or more petroleum discharges have occurred at this property. 1,2-Dichloroethane contaminated groundwater above NR 140 enforcement standard exists on this property at the following location(s): Near former groundwater monitoring well-8 (MW-8) at a concentration of 5.91 parts per billion (ppb) which is above the NR 140 enforcement standard of 5 ppb for 1,2-Dichloroethane. Location of monitoring wells and borings are provided on Figure 3, attached and made part of this restriction.

WHEREAS, it is the desire and intention of the property owner to impose on the property restrictions which will make it unnecessary to conduct additional soil or groundwater remediation activities on the property at the present time

WHEREAS, natural attenuation has been approved by the Department of Natural Resources to remediate groundwater exceeding ch. NR 140 groundwater standards within the boundaries of this property.

WHEREAS, construction of wells where the water quality exceeds the drinking water standards in ch. NR 809 is restricted by ch. NR 811 and ch. NR 812. Special well construction standards or water treatment requirements, or both, or well construction prohibitions may apply.

NOW THEREFORE, the owner hereby declares that all of the property described above is held and shall be held, conveyed or encumbered, leased, rented, used, occupied and improved subject to the following limitation and restrictions

Anyone who proposes to construct or reconstruct a well on this property is required to contact the Department of Natural Resources' Bureau of Drinking Water and Groundwater, or its successor agency, to determine what

specific prohibitions or requirements are applicable, prior to constructing or reconstructing a well on this property. No well may be constructed or reconstructed on this property unless applicable requirements are met.

This restriction is hereby declared to be a covenant running with the land and shall be fully binding upon all persons acquiring the above-described property whether by descent, devise, purchase or otherwise. This restriction benefits and is enforceable by, the Wisconsin Department of Natural Resources, its successors and assigns. The Department, its successors or assigns, may initiate proceedings at law or in equity against any person or persons who violate or are proposing to violate this covenant, to prevent the proposed violation or to recover damages for such violation.

Any person who is or becomes owner of the property described above may request that the Wisconsin Department of Natural Resources or its successor issue a determination that the restrictions set forth in this covenant are no longer required. Upon receipt of such a request, the Wisconsin Department of Natural Resources shall determine whether or not the restrictions contained herein can be extinguished. If the Department determines that the restrictions can be extinguished, an affidavit, with a copy of the Department's written determination, may be recorded to give notice that this groundwater use restriction is no longer binding.

IN WITNESS WHEREOF, the owner of the property has executed this Declaration of Restrictions, this 15TH day of December, 2000.

Signature: Thomas A Wied

Printed Name: THOMAS A. WIED

Subscribed and sworn to before me
this 15 day of December, 2000.

Brian Johnson - BRIAN JOHNSON
Notary Public, State of WISCONSIN
My commission 8-24-03

This document was drafted by the Wisconsin Department of Natural Resources.

BRIAN JOHNSON NOTARY PUBLIC STATE OF WISCONSIN

DOCUMENT NO.

1037388

**WARRANTY DEED**
STATE BAR OF WISCONSIN FORM 2 — 1982

J 8551 I 29

THIS SPACE RESERVED FOR RECORDING DATA

REGISTER OF DEEDS
BROWN COUNTY

NOV - 9 1984
AT 11:03 O'CLOCK A M.
REGISTER OF DEEDS

4.00

RETURN TO Mr. Thomas A. Wied
P.O. Box 10294
Green Bay, WI 54307

Mike Buckarma and Ethel Buckarma, his wife

conveys and warrants to Thomas A. Wied

the following described real estate in Brown County, State of Wisconsin:

Tax Parcel No:

Part of the NE ¼ of NE ¼, Section 22, Township 25 North, Range 20 East, commencing in Section N line and Centerline of Highway 41, S 32° 52' W 201.24 feet to beginning, South 32° 52' W 207.46 feet, North 88° 49' E 213.2 feet, N 21° 56' E 121.8 feet W 156.99 feet to beginning, secept Highway. .60A

South 35 feet of the following part of NE ¼ of NE¼, Sec. 22, Township 25 North, Range 20 East, commencing intersection N line and Centerline of Highway 41, S 32° 52' W 201.24 feet, S 68° 37' E 156.99 feet, N 21° 56' E 249.5 feet to N line S 87° 44' W 130.25 feet to beginning, except Highway. .13A

**TRANSFER**
$ 57.30
**FEE**

This is not homestead property.
~~(is)~~ (is not)

Exception to warranties:

Dated this 7th day of November, 19 84

X Mike Buckarma (SEAL)
* Mike Buckarma

X Ethel Buckarma (SEAL)
* Ethel Buckarma

(SEAL)
*

(SEAL)
*

**AUTHENTICATION**

Signature(s)

authenticated this day of, 19

*

**ACKNOWLEDGMENT**

STATE OF WISCONSIN } ss.
Brown County.

Personally came before me this 7th day of November, 19 84 the above named Mike Buckarma and Ethel Buckarma

# PLAT OF SURVEY

## Preliminary

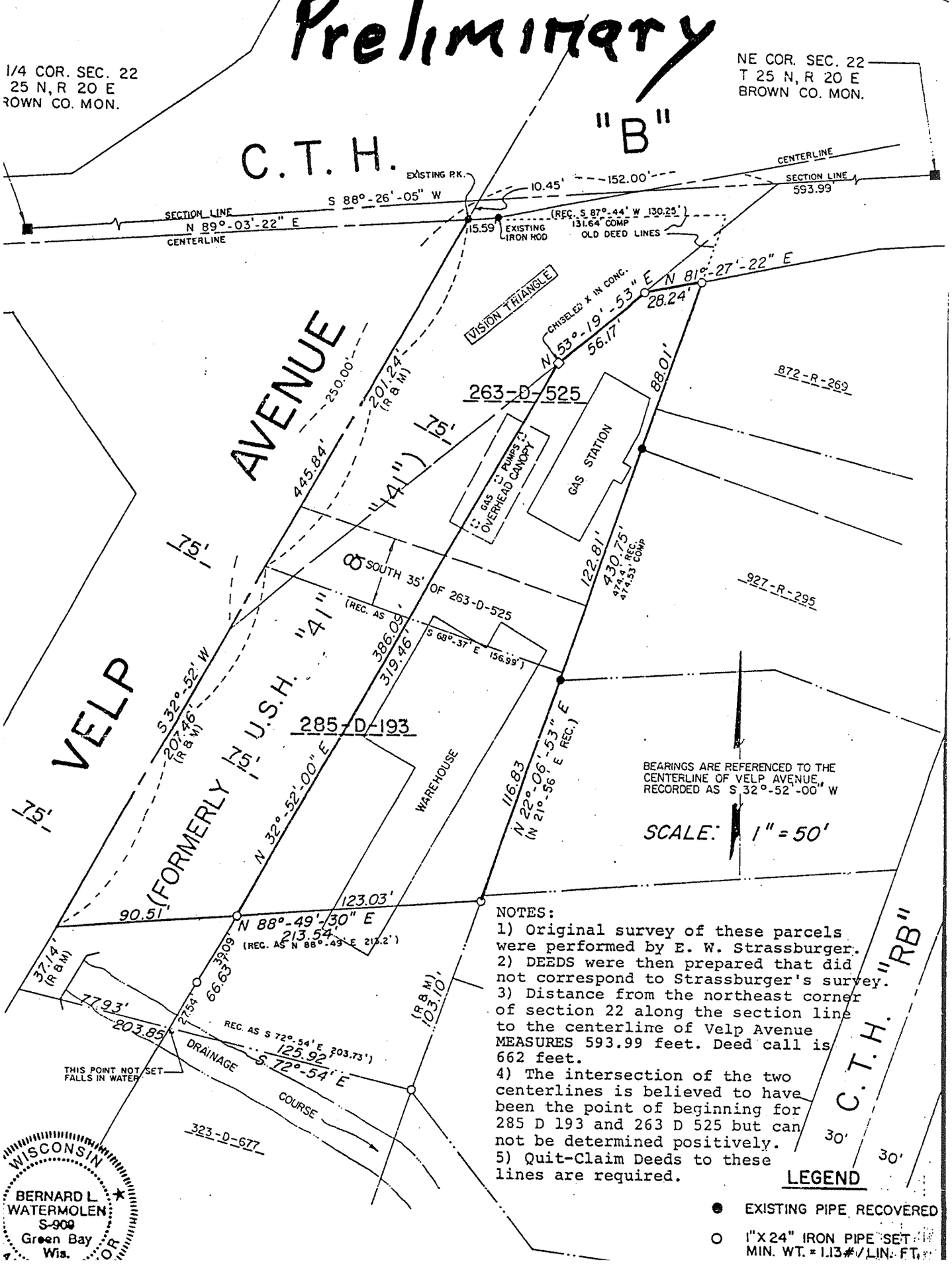


NOTES:

1) Original survey of these parcels were performed by E. W. Strassburger.
2) DEEDS were then prepared that did not correspond to Strassburger's survey.
3) Distance from the northeast corner of section 22 along the section line to the centerline of Velp Avenue MEASURES 593.99 feet. Deed call is 662 feet.
4) The intersection of the two centerlines is believed to have been the point of beginning for 285 D 193 and 263 D 525 but can not be determined positively.
5) Quit-Claim Deeds to these lines are required.

**LEGEND**

● EXISTING PIPE RECOVERED

○ 1"X24" IRON PIPE SET MIN. WT. = 1.13#/LIN. FT.

art of the NE 1/4-NE L/4,
ection 22, T25N, R20E,
own of Suamico, Brown County,
isconsin.

y E. W. Strassburger
and Surveyor, Green Bay, Wis.

uly 1960
lso ~~July~~ 1946
March

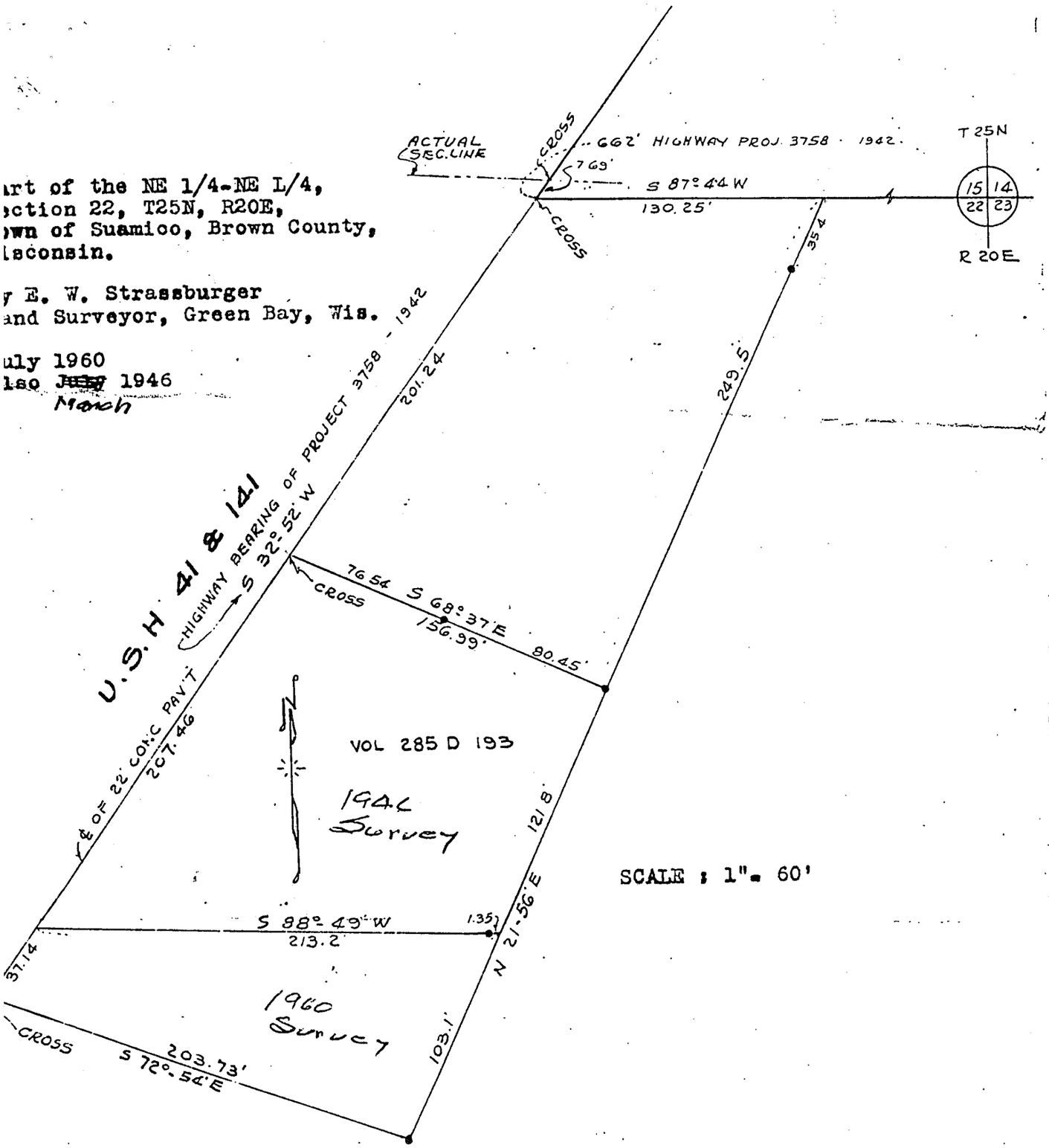

his Indenture, Made by James W. Vickery and wife, Edith J. Vickery,

antor s of Brown County, Wisconsin, hereby conveys and warrants Lyle Valentine and wife, Marie,

grantee s of Brown County, Wisconsin,

the sum of One-dollar and other considerations

e following tract of land in Brown County, State of Wisconsin;

That part of the NE¼ - NE¼, Section 22, T25N, R20E, in the Town of Suamico, Brown unty, Wisconsin, described as follows:

Commencing at the intersection of the centerline of USH 41 and 141 with the North ne of said Section 22, said point being marked by a cross on the centerline of the isting 22' concrete pavement; Thence South 32°-52' West along the centerline of said 2' concrete pavement 408.70 feet to the point of beginning; Thence continuing South 2°-52' West 37.14 feet; Thence South 72°-54' East 203.73 feet; Thence North 21°-56' East 03.1 feet to the Southeast corner of the parcel described in Volume 285 Deeds, Page 193; ence South 88°-49' W 213.2 feet to the point of beginning.

xcepting that part used for highway purposes:

IN WITNESS WHEREOF, the said grantor s have hereunto set their hand s and seal s this 20th day of July, A. D., 19 60

SIGNED AND SEALED IN PRESENCE OF

James W Vickery (SEAL)
James W. Vickery

(SEAL)
James W. Vickery

Edith F. Vickery
Edith Vickery (SEAL)

(SEAL)

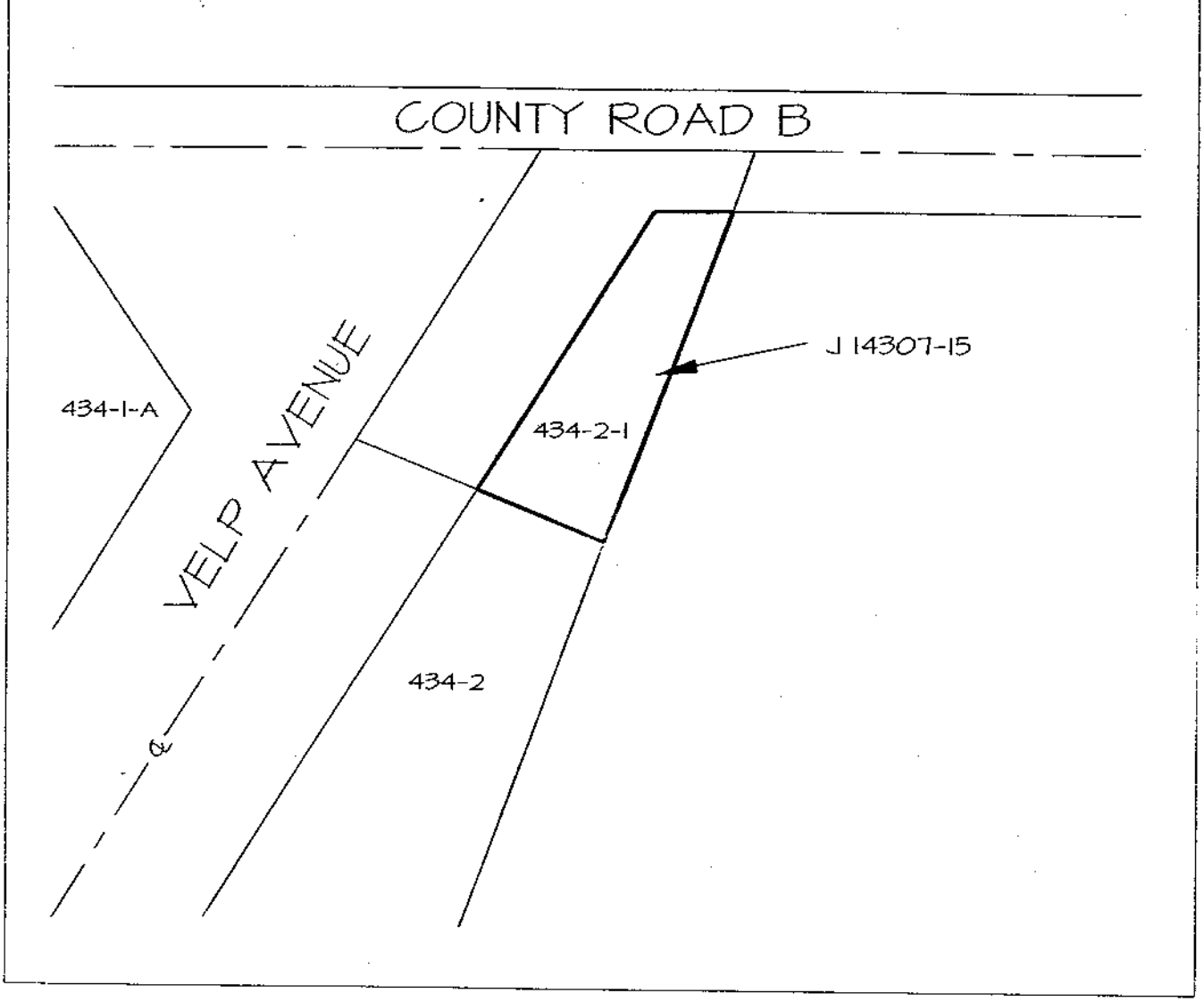


# PARCEL MAP

THOMAS WIED PROPERTY
13394 VELP AVENUE
SUAMICO, WISCONSIN

NORTH

1" = 100'

ATTACHMENT

J 14307 I 15

1182377

STATE OF WISCONSIN CIRCUIT COURT BROWN COUNTY

KELLOGG-CITIZENS NATIONAL BANK
OF GREEN BAY,
a banking corporation organized and
existing under the laws of the
United States,

Plaintiff,

-vs-

MICHAEL RYBAK and
JUNE RYBAK, his wife,

GARROW OIL CORP.,
a/k/a Garrow Oil Corporation,
a Wisconsin corporation,

U. S. OIL CO., INC.,
a Wisconsin corporation,

PETROLEUM EQUIPMENT SERVICE
OF WISCONSIN, INC.,
a/k/a Petroleum Equipment Service,
a Wisconsin corporation,

BERNARD L. WATERMOLEN,

SAMUEL E. NEELEY,

STATE OF WISCONSIN, DEPARTMENT OF REVENUE,

and

COCA-COLA BOTTLING COMPANY OF WISCONSIN,
a/k/a Coca-Cola Bottling Co., of WI,
a foreign corporation,

Defendants.

SHERIFF'S DEED

Case No. 87-CV-820

TAX PARCEL NO.: SU-434-2-1

TRANSFER
15.00
FEE
REGISTER OF DEEDS
BROWN COUNTY
1989 MAY 12 PM 3 31
CATHY WILLIQUETTE BREUNIG
REGISTER OF DEEDS
10.00

THIS INDENTURE, made the 7th day of April, 1989, between Leon R. Pieschek, Sheriff of the County of Brown, party of the first part, and Charles A. Parsons, party of the second part.

WITNESSETH, that whereas, at a Term of the Circuit Court, held in and for the County of Brown at the Courthouse in Green



I, Cathy Williquette, Brown County Register of Deeds, do hereby certify that this is a true and correct copy [illegible] the Brown County Register of Deeds Office, Green Bay, Wisconsin.
I herewith set my hand and official seal this 19 day of March A.D., 19 99
Cathy Williquette
REGISTER OF DEEDS

Bay in said County, on the 16th day of July, 1987, it was among other things ordered and adjudged by the said Court that the mortgaged premises mentioned in the Complaint in said action, and in said judgment described, be sold at public auction by or under the direction of the Sheriff of the County of Brown, at any time after six (6) months from the date of entry of said judgment, unless, previous to such sale said premises and said judgment were redeemed in the manner provided by law; that said sale be made in the County of Brown where the premises are situated;

That the said Sheriff give public notice of the time and place of such sale, in the manner provided by law; that any of the parties in said action might purchase at such sale; that the said Sheriff upon compliance by the purchaser with the terms of such sale, execute and deliver to the Clerk of Court, a deed to the purchaser of the premises, so sold, setting forth each tract or parcel so sold and the sum paid therefor; that the Clerk of Court, upon compliance of the party of the second part with all the requirements of Section 846.17 of the Wisconsin Statutes, as amended, deliver to the purchaser, or purchasers, said deed;

AND WHEREAS, neither said premises nor any part thereof, had been redeemed, and neither said judgment nor any part thereof, had been paid, and six months from the date of the entry of said judgment having expired;

AND WHEREAS, the said Sheriff, pursuant to said judgment, on the 6th day of April, 1989, sold at public auction, at the lobby

of the Brown County Law Enforcement Center, 300 East Walnut Street, Green Bay, Wisconsin, at the hour of 10:00 A.M., all of the premises in the said judgment described, due notice of the time and place of such sale being first given, agreeable to the said judgment, at which sale the premises hereinafter described were struck off to the said party of the second part for the sum of $5,000.00, said party of the second part being the highest and best bidder therefor, and that being the highest sum bid for the same.

NOW, THIS INDENTURE, WITNESSETH, that the said Sheriff, by virtue of the said judgment, and of the statute in such case made and provided, and in consideration of the said sum of money so bid as aforesaid being first duly paid by the said party of the second part, the receipt whereof is hereby acknowledged, has granted, bargained, sold, aliened, and conveyed, and by these presents does grant, bargain, sell, alien, and convey unto the said party of the second part, and to its successors and assigns forever all the following described land situated in the County of Brown in the State of Wisconsin:

> The Northeast Quarter of the Northeast Quarter (NE 1/4 of NE 1/4) of Section Twenty-two (22), Township Twenty-five (25) North, Range Twenty (20) East, in the Town of Suamico, Brown County, Wisconsin, described as follows: Commencing at the intersection of the centerline of U.S. Highway 41 and 141 with the North line of said Section 22, said point of intersection being 662 feet west of the northeast corner of said Section 22, and being marked by a cross on the centerline of the existing 22 foot concrete pavement; thence S 32 degrees 52' W along the centerline of said Highway 41 and 141, 201.24 feet; thence S 68 degrees 37' E 156.99 feet to a 1" iron rod; thence N 21 degrees 56' E 249.5 feet to the north

1182377

line of said Section 22; thence S 87 degrees 44' W 130.25 feet to the point of commencement; except the southerly thirty-five (35) feet of the above described tract of land excepting therefrom any parts thereof used for highway purposes.

IN WITNESS WHEREOF, the said party of the first part, Leon R. Pieschek, Sheriff as aforesaid, has hereunto set his hand and seal on the day and year first above written.

Leon R. Pieschek
Leon R. Pieschek,
as Sheriff of Brown County,
Wisconsin

STATE OF WISCONSIN )
) SS.
COUNTY OF BROWN )

Personally came before me this 7th day of April, 1989, the above-named Leon R. Pieschek, as Sheriff of Brown County, Wisconsin, to me known to be the person and officer described in, and who executed the above conveyance, as such officer, and acknowledged the same.

Barbara J. Koltz
Notary Public, State of Wisconsin
My commission expires: 1-19-92

BARBARA J. KOLTZ NOTARY PUBLIC STATE OF WISCONSIN

This instrument was drafted by Attorney Charles H. Wheeler.

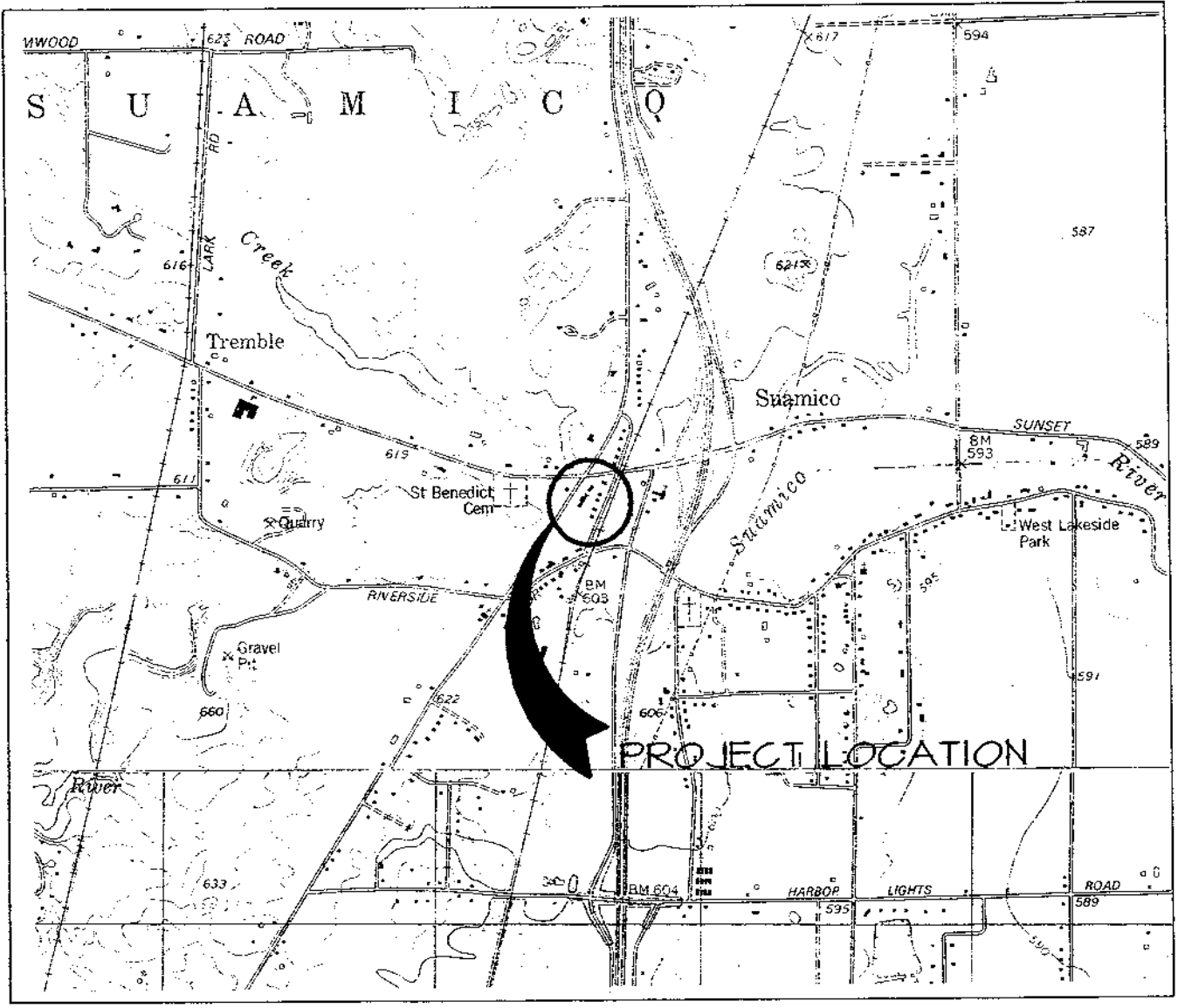


# LOCATION MAP

## THOMAS WIED PROPERTY
## 13394 VELP AVENUE
## SUAMICO, WISCONSIN

NORTH

1" = 2000'

MAP USED - SUAMICO QUAD - 1974
MAP USED - GREEN BAY WEST QUAD - 1982

FIGURE 1

ROTATED -90° @ 0,0

VELP AVENUE C.T.H. "HS"

SCHOOL LANE C.T.H. "B"

24" CMP CULVERT

APPROX. SAN. LATERAL LOCATION

TOP OF EXCAVATION LIMITS

BASE OF EXCAVATION LIMITS

PREVIOUS CANOPY

PREVIOUS SERVICE STATION

GRAVEL

GARAGE

BIT.

APPROX. LOCATION 1000 GALLON DIESEL TANK

CULVERT

GAS SHUTOFF SUPPLY LINE

BANK FENCE

TELEPHONE BOOTH CONC. PAD

SB-1 SB-2 SB-3 SB-4 SB-5 SB-6 SB-7 SB-8 SB-9 SB-10 SB-11 SB-12 SB-13 SB-14 SB-15 SB-16 SB-17 SB-18 SB-19 SB-20 SB-21 SB-22

MW-6 MW-7 MW-8 MW-10 MW-11 MW-12 MW-13 MW-15

S1 S2 S3 S4 S5 S6 S7 S8 S9 S10

NORTH

SCALE: 1"=30'

0' 10' 20' 30' 45' 60'

## LEGEND

| | |
|---|---|
| ---SAN--- | SANITARY SEWER |
| ----G---- | GAS LINE |
| ----T---- | TELEPHONE LINE |
| T | TELEPHONE PEDESTAL |
| | LIGHT POLE |
| P | POWER POLE |
| | SOIL BORING |
| | MONITORING WELL |
| • | SOIL SAMPLE LOCATIONS |

# THOMAS WIED PROPERTY
# 13394 VELP AVENUE
# SUAMICO, WISCONSIN

## REMEDIAL EXCAVATION PLAN

NOTE:
ALL PROPERTY LINE LOCATIONS ARE APPROXIMATE.

FIGURE 3

N:\1517006\1517FIG3.DWG

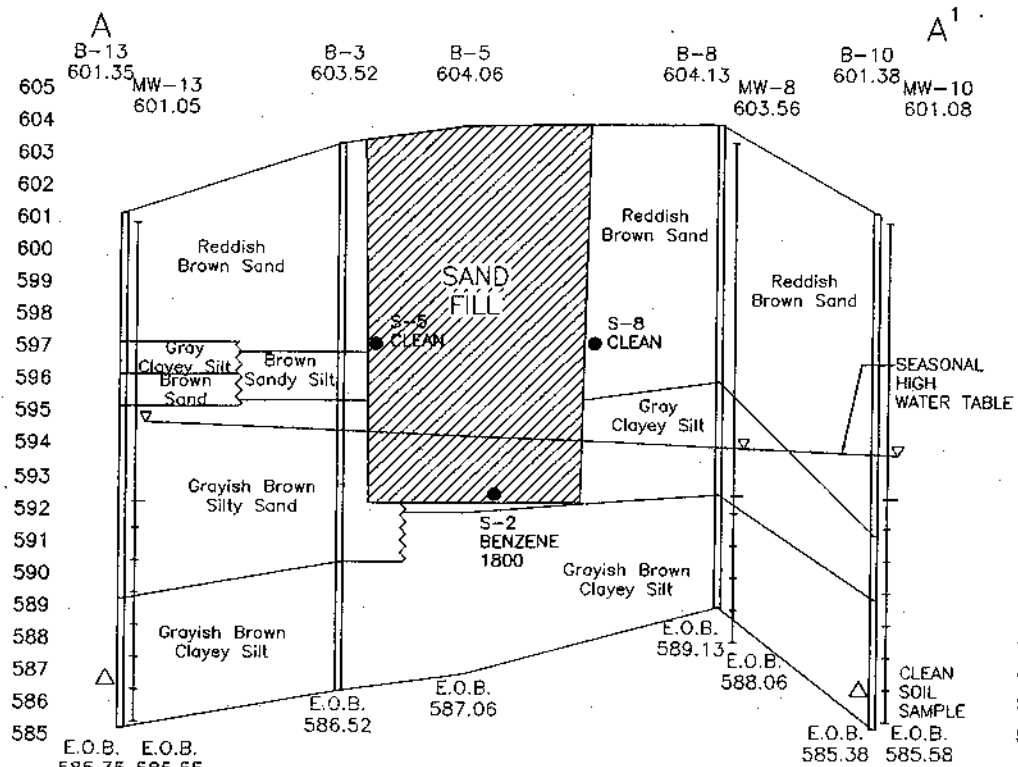


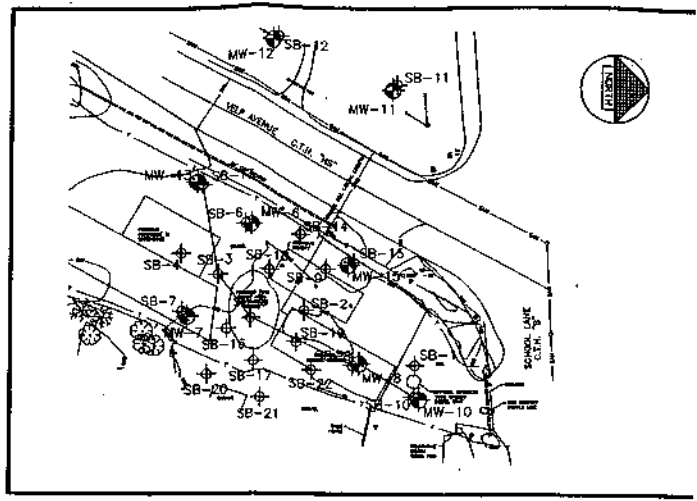


## LEGEND

SOIL BORING

MONITORING WELL

GROUNDWATER ELEVATIONS TAKEN 1/9/96

## SCALE

VERTICAL 1" = 4'

HORIZONTAL 1" = 40'

# THOMAS WIED PROPERTY
# 13394 VELP AVENUE
# SUAMICO, WISCONSIN

POST-REMEDIAL
GEOLOGIC
CROSS-SECTION

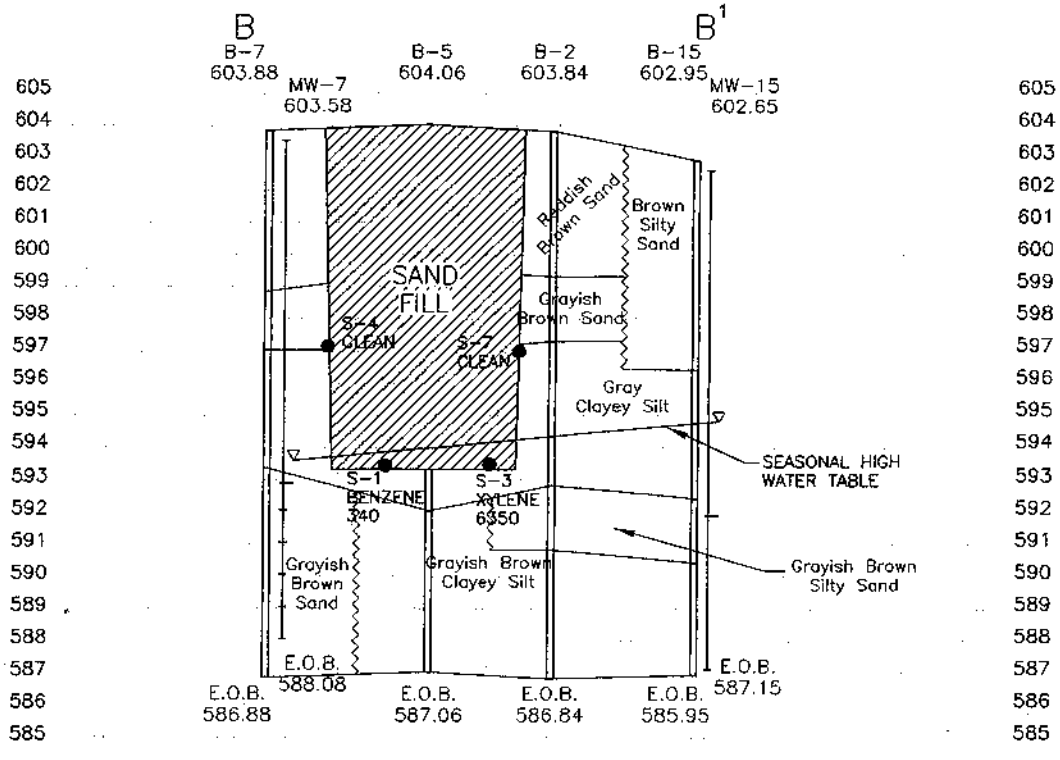


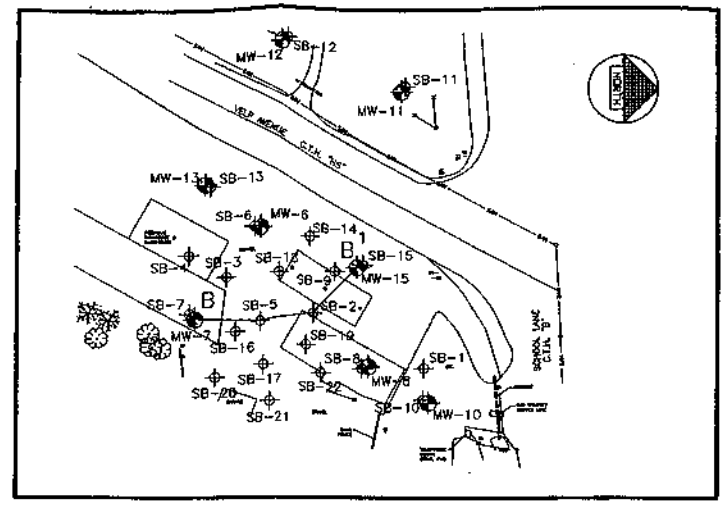


## LEGEND

- SOIL BORING
- MONITORING WELL

GROUNDWATER ELEVATIONS TAKEN 1/9/96

## SCALE

VERTICAL 1" = 4'

HORIZONTAL 1" = 40'

# THOMAS WIED PROPERTY
# 13394 VELP AVENUE
# SUAMICO, WISCONSIN

## POST-REMEDIAL GEOLOGIC CROSS-SECTION

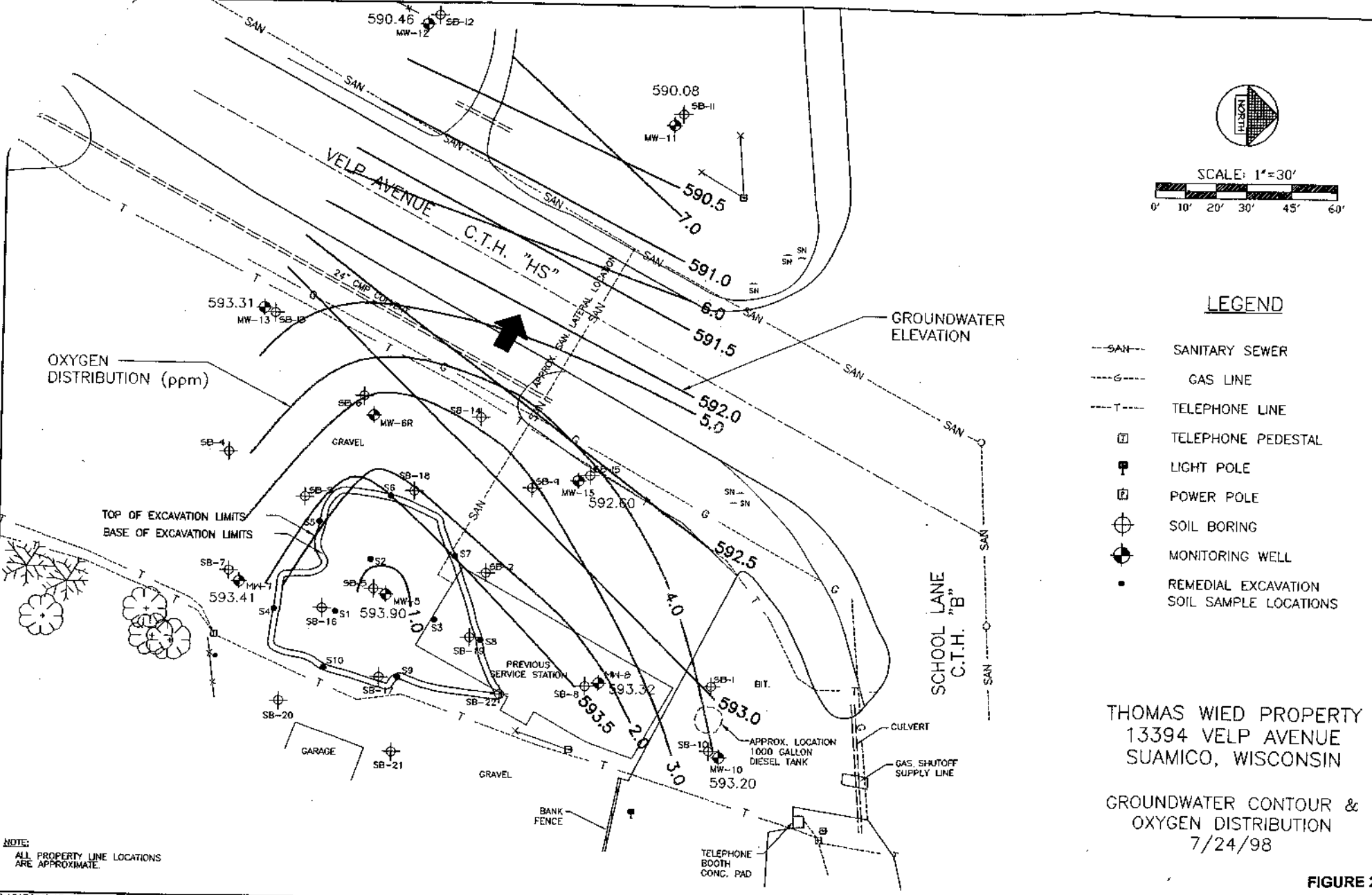


THOMAS WIED PROPERTY
13394 VELP AVENUE
SUAMICO, WISCONSIN

GROUNDWATER CONTOUR & OXYGEN DISTRIBUTION
7/24/98

**FIGURE 21**

# THOMAS WIED PROPERTY

## Table 7
## Laboratory Analysis-Groundwater

| Analytes | ES | PAL | MW-5 | | | | |
|---|---|---|---|---|---|---|---|
| | | | 7/21/97 | 10/20/97 | 1/8/98 | 4/1/98 | 7/24/98 |
| **PVOCs (µg/l)** | | | | | | | |
| Benzene | 5 | .5 | <0.5 | <0.5 | <0.5 | <0.5 | <0.5 |
| 1,2-Dichloroethane | 5 | .5 | <1.0 | <1.0 | <1.0 | <1.0 | <1.0 |
| Ethylbenzene | 700 | 140 | <1.0 | <1.0 | <1.0 | <1.0 | <1.0 |
| MTBE | 60 | 12 | <1.0 | <1.0 | <1.0 | <1.0 | <1.0 |
| Naphthalene | 40 | 8 | <1.0 | <1.0 | <1.0 | <1.0 | NA |
| Toluene | 343 | 68.6 | <1.0 | <1.0 | <1.0 | <1.0 | <1.0 |
| Trimethylbenzene | 480 | 96 | <1.0 | <1.0 | <1.0 | <1.0 | <1.0 |
| Xylene | 620 | 124 | <1.0 | <1.0 | <1.0 | <1.0 | <1.0 |
| **Indicators** | | | | | | | |
| Sulfate (mg/l) | - | - | 277 | 303 | 131 | 348 | 477 |
| Nitrate (mg/l) | 10 | 2 | <0.3 | 0.350 | 4.32 | 4.07 | 1.94 |
| Dissolved Oxygen (mg/l) | - | - | 0.2 | 0.8 | 0.7 | 0.6 | 1.8 |
| Iron (mg/l) | - | - | 0.1 | 0.1 | 0.1 | 0.1 | 0.2 |
| Methane ug/l) | - | - | NA | NA | 18 | 44.7 | NA |

## Table 8

| Analytes | ES | PAL | MW-6R | | | | |
|---|---|---|---|---|---|---|---|
| | | | 7/21/97 | 10/20/97 | 1/8/98 | 4/1/98 | 7/24/98 |
| **PVOCs (µg/l)** | | | | | | | |
| Benzene | 5 | .5 | <0.5 | <0.5 | <0.5 | <0.5 | <0.5 |
| 1,2-DCA | 5 | 0.5 | <1.0 | **1.62** | **4.95** | <1.0 | <1.0 |
| Ethylbenzene | 700 | 140 | <1.0 | <1.0 | <1.0 | <1.0 | <1.0 |
| MTBE | 60 | 12 | <1.0 | <1.0 | <1.0 | <1.0 | <1.0 |
| Naphthalene | 40 | 8 | <1.0 | <1.0 | <1.0 | <1.0 | NA |
| Toluene | 343 | 68.6 | <1.0 | <1.0 | <1.0 | <1.0 | <1.0 |
| Trimethylbenzene | 480 | 96 | <1.0 | <1.0 | <1.0 | <1.0 | <1.0 |
| Xylene | 620 | 124 | <1.0 | <1.0 | <1.0 | <1.0 | <1.0 |
| **Indicators** | | | | | | | |
| Sulfate (mg/l) | - | - | 57.6 | 348 | 130 | 46.5 | 604 |
| Nitrate (mg/l) | 10 | 2 | 10.5 | 3.67 | 4.29 | 0.329 | 5.03 |
| Dissolved Oxygen (mg/l) | - | - | 2.1 | 2.2 | 1.8 | 1.9 | 3.4 |
| Iron (mg/l) | - | - | 0.1 | 0.1 | 0.1 | 0.1 | 0.1 |
| Methane (ug/l) | - | - | NA | NA | 25 | 118 | NA |

= Enforcement standard exceedance

= Preventive action limit exceedance

# THOMAS WIED PROPERTY

## Table 9
## Laboratory Analysis-Groundwater

| Analytes | ES | PAL | MW-7 | | | | | | |
|---|---|---|---|---|---|---|---|---|---|
| | | | 1/20/97 | 4/16/97 | 7/21/97 | 10/20/97 | 1/8/98 | 4/1/98 | 7/24/98 |
| **PVOCs (µg/l)** | | | | | | | | | |
| Benzene | 5 | .5 | <0.5 | <0.5 | <0.5 | <0.5 | <0.5 | <0.5 | <0.5 |
| 1,2-Dichloroethane | 5 | .5 | **3.6** | 6.91 | <1.0 | **2.08** | **3.70** | 7.71 | <1.0 |
| Ethylbenzene | 700 | 140 | <1.0 | <1.0 | <1.0 | <1.0 | <1.0 | <1.0 | <1.0 |
| MTBE | 60 | 12 | <1.0 | <1.0 | <1.0 | 1.09 | <1.0 | <1.0 | <1.0 |
| Naphthalene | 40 | 8 | <1.0 | <1.0 | NA | NA | NA | <1.0 | <1.0 |
| Toluene | 343 | 68.6 | <1.0 | <1.0 | <1.0 | <1.0 | <1.0 | <1.0 | <1.0 |
| Trimethylbenzene | 480 | 96 | <1.0 | <1.0 | <1.0 | <1.0 | <1.0 | <1.0 | <1.0 |
| Xylene | 620 | 124 | <1.0 | <1.0 | <1.0 | <1.0 | <1.0 | <1.0 | <1.0 |
| **Indicators** | | | | | | | | | |
| Sulfate (mg/l) | - | - | 35.9 | 29.7 | 68.7 | 45.3 | 50.4 | 19.6 | 194 |
| Nitrate (mg/l) | 10 | 2 | <0.3 | 0.63 | 1.08 | 0.303 | <0.3 | 0.464 | 2.47 |
| Dissolved $O_2$ (mg/l) | - | - | 1.6 | 2.2 | 4.5 | 0.8 | 1.7 | 1.8 | 5.1 |
| Iron (mg/l) | - | - | 0.2 | 0.1 | 0.1 | 0.1 | 0.1 | 0.1 | 0.1 |
| Methane (ug/l) | - | - | NA | NA | NA | NA | 1.0 | 1.96 | NA |

## Table 10

| Analytes | ES | PAL | MW-8 | | | | | | |
|---|---|---|---|---|---|---|---|---|---|
| | | | 1/20/97 | 4/16/97 | 7/21/97 | 10/20/97 | 1/8/98 | 4/1/98 | 7/24/98 |
| **PVOCs (µg/l)** | | | | | | | | | |
| Benzene | 5 | .5 | <0.5 | <0.5 | <0.5 | <0.5 | <0.5 | <0.5 | <0.5 |
| 1,2-Dichloroethane | 5 | .5 | **2.8** | <1.0 | <1.0 | **4.86** | **4.24** | **1.70** | 5.91 |
| Ethylbenzene | 700 | 140 | <1.0 | <1.0 | <1.0 | <1.0 | <1.0 | <1.0 | <1.0 |
| MTBE | 60 | 12 | **38.0** | 1.03 | **45.6** | **52.9** | **44.4** | **16.4** | **35.3** |
| Naphthalene | 40 | 8 | <1.0 | <1.0 | NA | NA | NA | <1.0 | NA |
| Toluene | 343 | 68.6 | <1.0 | <1.0 | <1.0 | <1.0 | <1.0 | <1.0 | <1.0 |
| Trimethylbenzene | 480 | 96 | <1.0 | <1.0 | <1.0 | <1.0 | <1.0 | <1.0 | <1.0 |
| Xylene | 620 | 124 | <1.0 | <1.0 | <1.0 | <1.0 | <1.0 | <1.0 | <1.0 |
| **Indicators** | | | | | | | | | |
| Sulfate (mg/l) | - | - | 39.9 | 19.1 | 36.0 | 36.6 | 37.8 | 29.4 | 42.8 |
| Nitrate (mg/l) | 10 | 2 | <0.3 | <0.3 | <0.3 | <0.3 | <0.3 | 0.456 | <0.3 |
| Dissolved $O_2$ (mg/l) | - | - | 1.1 | 3.4 | 0.9 | 1.6 | 1.4 | 2.7 | 0.7 |
| Iron (mg/l) | - | - | 0.2 | 0.1 | 0.1 | 0.1 | 0.1 | 0.1 | 0.1 |
| Methane (ug/l) | - | - | NA | NA | NA | NA | 200 | 139 | NA |

= Enforcement standard exceedance

= Preventive action limit exceedance

# THOMAS WIED PROPERTY

## Table 11
## Laboratory Analysis-Groundwater

| Analytes | ES | PAL | MW-10 | | | | | | |
|---|---|---|---|---|---|---|---|---|---|
| | | | 1/20/97 | 4/16/97 | 7/21/97 | 10/20/97 | 1/8/98 | 4/1/98 | 7/24/98 |
| **PVOCs (μg/l)** | | | | | | | | | |
| Benzene | 5 | .5 | <0.5 | <0.5 | <0.5 | <0.5 | <0.5 | <0.5 | <0.5 |
| 1,2-Dichloroethane | 5 | .5 | <1.0 | <1.0 | <1.0 | **1.27** | <1.0 | <1.0 | <1.0 |
| Ethylbenzene | 700 | 140 | <1.0 | <1.0 | <1.0 | <1.0 | <1.0 | <1.0 | <1.0 |
| MTBE | 60 | 12 | **26.5** | 7.98 | 74.2 | 94.6 | **52.8** | **47.5** | **34.0** |
| Naphthalene | 40 | 8 | <1.0 | <1.0 | NA | NA | NA | <1.0 | NA |
| Toluene | 343 | 68.6 | <1.0 | <1.0 | <1.0 | <1.0 | <1.0 | <1.0 | <1.0 |
| Trimethylbenzene | 480 | 96 | <1.0 | <1.0 | <1.0 | <1.0 | <1.0 | <1.0 | <1.0 |
| Xylene | 620 | 124 | <1.0 | <1.0 | <1.0 | <1.0 | <1.0 | <1.0 | <1.0 |
| **Indicators** | | | | | | | | | |
| Sulfate (mg/l) | - | - | 33.7 | 43.2 | 19.3 | 17.9 | 18.4 | 18.5 | 18.1 |
| Nitrate (mg/l) | 10 | 2 | <0.3 | 0.46 | 0.891 | <0.3 | <0.3 | 0.400 | 1.21 |
| Dissolved $O_2$ (mg/l) | - | - | 3.0 | 1.9 | 4.4 | 4.6 | 5.7 | 5.0 | 4.6 |
| Iron (mg/l) | - | - | 0.2 | 0.1 | 0.1 | 0.1 | 0.1 | 0.1 | 0.1 |
| Methane (ug/l) | - | - | NA | NA | NA | NA | 360 | 241 | NA |

## Table 12

| Analytes | ES | PAL | MW-11 | |
|---|---|---|---|---|
| | | | 4/1/98 | 7/24/98 |
| **PVOC (μg/l)** | | | | |
| Benzene | 5 | .5 | <0.5 | <0.5 |
| 1,2-Dichloroethane | 5 | .5 | <1.0 | <1.0 |
| Ethylbenzene | 700 | 140 | <1.0 | <1.0 |
| MTBE | 60 | 12 | <1.0 | <1.0 |
| Naphthalene | 40 | 8 | <1.0 | <1.0 |
| Toluene | 343 | 68.6 | <1.0 | <1.0 |
| Trimethylbenzene | 480 | 96 | <1.0 | <1.0 |
| Xylene | 620 | 124 | <1.0 | <1.0 |
| **Indicators** | | | | |
| Sulfate (mg/l) | - | - | 37.8 | 39.6 |
| Nitrate (mg/l) | 10 | 2 | 0.400 | <0.3 |
| Dissolved $O_2$ (mg/l) | - | - | 11.6 | 2.1 |
| Iron (mg/l) | - | - | 0.1 | 0.1 |
| Methane (ug/l) | - | - | <1.0 | NA |

= Enforcement standard exceedance

= Preventive action limit exceedance

# THOMAS WIED PROPERTY

## Table 13
## Laboratory Analysis-Groundwater

| Analytes | ES | PAL | MW-12 | |
|---|---|---|---|---|
| | | | 4/1/98 | 7/24/98 |
| **PVOC (µg/l)** | | | | |
| Benzene | 5 | .5 | <0.5 | <0.5 |
| 1,2-Dichloroethane | 5 | .5 | <1.0 | <1.0 |
| Ethylbenzene | 700 | 140 | <1.0 | <1.0 |
| MTBE | 60 | 12 | <1.0 | <1.0 |
| Naphthalene | 40 | 8 | <1.0 | <1.0 |
| Toluene | 343 | 68.6 | <1.0 | <1.0 |
| Trimethylbenzene | 480 | 96 | <1.0 | <1.0 |
| Xylene | 620 | 124 | <1.0 | <1.0 |
| **Indicators** | | | | |
| Sulfate (mg/l) | - | - | 42.0 | 38.5 |
| Nitrate (mg/l) | 10 | 2 | 0.353 | <0.3 |
| Dissolved $O_2$ (mg/l) | - | - | 11.0 | 1.6 |
| Iron (mg/l) | - | - | 0.1 | 0.1 |
| Methane (ug/l) | - | - | <1.0 | NA |

## Table 14

| Analytes | ES | PAL | MW-13 | | | | | | |
|---|---|---|---|---|---|---|---|---|---|
| | | | 1/20/97 | 4/16/97 | 7/21/97 | 10/20/97 | 1/8/98 | 4/1/98 | 7/24/98 |
| **PVOC (µg/l)** | | | | | | | | | |
| Benzene | 5 | .5 | <0.5 | <0.5 | <0.5 | <0.5 | <0.5 | <0.5 | <0.5 |
| 1,2-Dichloroethane | 5 | .5 | <1.0 | <1.0 | <1.0 | **2.63** | 9.27 | <1.0 | **1.39** |
| Ethylbenzene | 700 | 140 | <1.0 | <1.0 | <1.0 | <1.0 | <1.0 | <1.0 | <1.0 |
| MTBE | 60 | 12 | <1.0 | <1.0 | <1.0 | <1.0 | <1.0 | <1.0 | <1.0 |
| Naphthalene | 40 | 8 | <1.0 | <1.0 | NA | NA | NA | <1.0 | <1.0 |
| Toluene | 343 | 68.6 | <1.0 | <1.0 | <1.0 | <1.0 | <1.0 | <1.0 | <1.0 |
| Trimethylbenzene | 480 | 96 | <1.0 | <1.0 | <1.0 | <1.0 | <1.0 | <1.0 | <1.0 |
| Xylene | 620 | 124 | <1.0 | <1.0 | <1.0 | <1.0 | <1.0 | <1.0 | <1.0 |
| **Indicators** | | | | | | | | | |
| Sulfate (mg/l) | - | - | 137 | 27.5 | 81.3 | 89.7 | 116 | 73.8 | 102 |
| Nitrate (mg/l) | 10 | 2 | 0.934 | 1.13 | 1.15 | 0.364 | 0.360 | 0.353 | 1.28 |
| Dissolved $O_2$ (mg/l) | - | - | 4.2 | 6.3 | 4.5 | 6.3 | 6.9 | 7.3 | 1.7 |
| Iron (mg/l) | - | - | 0.1 | 0.1 | 0.1 | 0.1 | 0.1 | 0.1 | 0.1 |
| Methane (ug/l) | - | - | NA | NA | NA | NA | <0.5 | <1.0 | NA |

= Enforcement standard exceedance

= Preventive action limit exceedance

# THOMAS WIED PROPERTY

## Table 15
## Laboratory Analysis-Groundwater

| Analytes | ES | PAL | MW-15 | | | | | | |
|---|---|---|---|---|---|---|---|---|---|
| | | | 1/20/97 | 4/16/97 | 7/21/97 | 10/20/97 | 1/8/98 | 4/1/98 | 7/24/98 |
| **PVOC (µg/l)** | | | | | | | | | |
| Benzene | 5 | .5 | 9.3 | <0.5 | <5 | 9.18 | 44.1 | <0.5 | **0.816** |
| 1,2-Dichloroethane | 5 | .5 | **1.2** | <1.0 | NA | <1.0 | **1.83** | <1.0 | <1.0 |
| Ethylbenzene | 700 | 140 | <1.0 | <1.0 | 50.6 | 1.97 | 1.25 | <1.0 | 12.6 |
| MTBE | 60 | 12 | **33.1** | <1.0 | <10 | **15.7** | **39.6** | <1.0 | <1.0 |
| Naphthalene | 40 | 8 | <1.0 | <1.0 | 69.8 | NA | NA | <1.0 | NA |
| Toluene | 343 | 68.6 | <1.0 | <1.0 | 11.1 | <1.0 | <1.0 | <1.0 | <1.0 |
| Trimethylbenzene | 480 | 96 | <1.0 | 2.53 | 746 | 12.6 | 1.94 | <1.0 | **327** |
| Xylene | 620 | 124 | <1.0 | 3.09 | 694 | 2.47 | <1.0 | <1.0 | 63.5 |
| **Indicators** | | | | | | | | | |
| Sulfate (mg/l) | - | - | 27.5 | 25.2 | 40.2 | 47.7 | 24.1 | 31.8 | 87.7 |
| Nitrate (mg/l) | 10 | 2 | <0.3 | 0.47 | <0.3 | <0.3 | <0.3 | 1.37 | <0.3 |
| Dissolved $O_2$ (mg/l) | - | - | 1.8 | 1.4 | 1.6 | 6.1 | 5.1 | 6.2 | 1.1 |
| Iron (mg/l) | - | - | 1.0 | 0.1 | 6.0 | 0.1 | 0.1 | 0.1 | 0.1 |
| Methane (ug/l) | - | - | NA | NA | NA | NA | 180 | <1.0 | NA |

= Enforcement standard exceedance

= Preventive action limit exceedance